QUANTITIES				
STRUCTURE NUMBER	STRUCTURE NAME	MILE POST	BRIDGE ATTACHED CONDUIT	REMOVE CONDUIT
			FT	FT
C 560	STARVATION RESERVOIR BRIDGE	81.15	1636	1636

INDEX OF SHEETS

1. SUMMARY AND GENERAL NOTES
2. C 560 PLAN AND DETAILS
3. CONDUIT SUPPORT DETAILS

FOR INFORMATION ONLY SHEETS

C-560 SHEET 1 OF 17
C-560 SHEET 4 OF 17
C-560 SHEET 10 OF 17
C-560 SHEET 11 OF 17
C-560 SHEET 13 THROUGH 17 OF 17
C-560R2 SHEET 1 OF 5
C-560R2 SHEET 2 OF 5
C-560R2 SHEET 3 OF 5
C-560R3 SHEET 1 THROUGH 10 OF 10
C-560R4 SHEET 1 THROUGH 3 OF 3
C-560R5 SHEET 1 OF 2
C-560R5 SHEET 2 OF 2
C-560R6 SHEET 1 OF 6
C-560R6 SHEET 2 OF 6
C-560R6 SHEET 3 OF 6
C-560R6 SHEET 6 OF 6
C-560R8 SHEET 1 OF 10
C-560R8 SHEET 2 OF 10
C-560R8 SHEET 3 OF 10
C-560R8 SHEET 7 OF 10

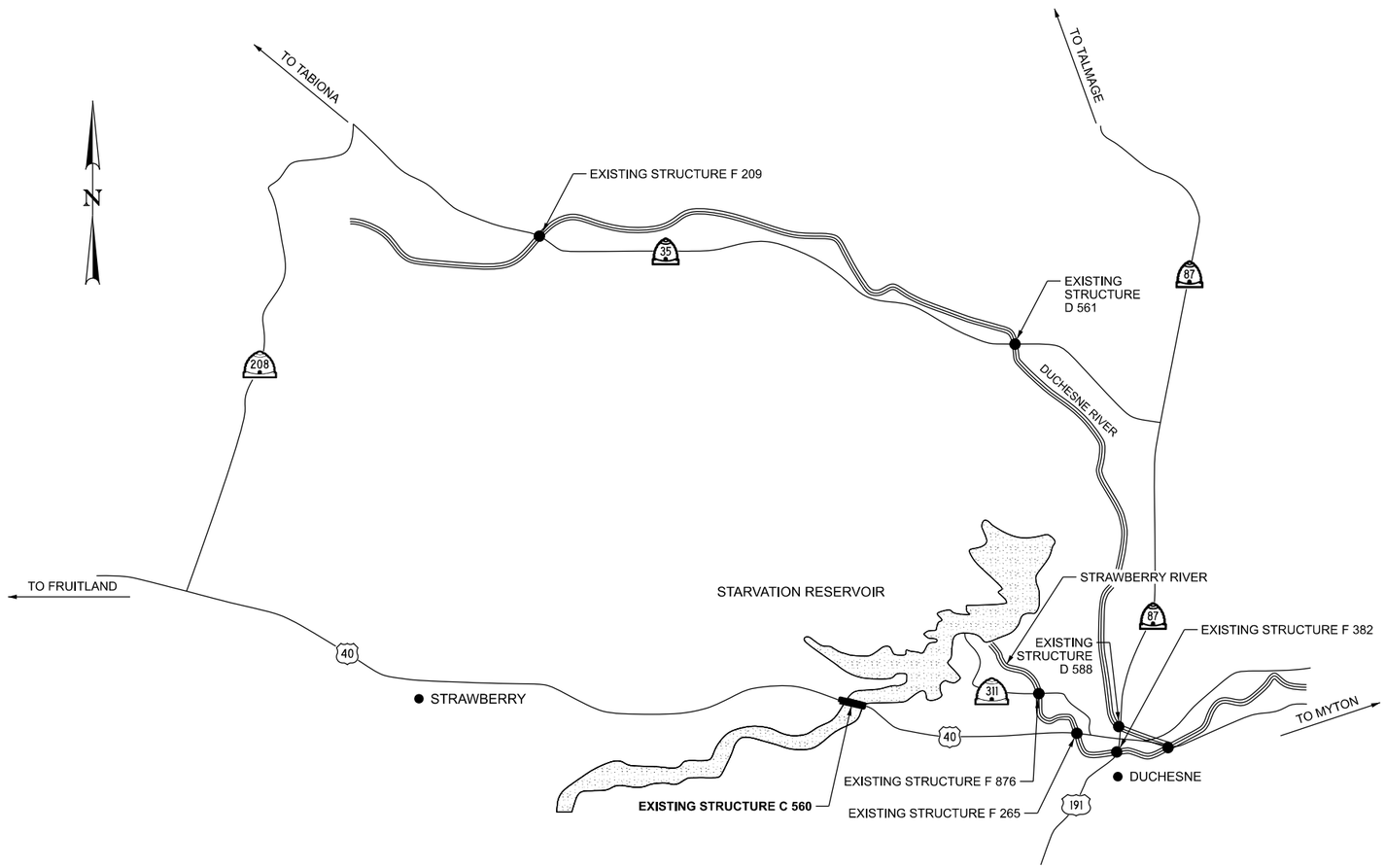

LOCATION PLAN

REGISTERED PROFESSIONAL ENGINEER
No. 7870922
ADAM J. BIRDSALL
11/14/25
STATE OF UTAH

THIS SEAL APPLIES TO ALL SHEETS
CONTAINING THE SIGNATURE ON THE SEAL
UTAH DEPARTMENT OF TRANSPORTATION
AUTHORIZED FOR USE

UDOT STRUCTURES DESIGN MANAGER

DESIGN DATA

UTILITY LOADING IN ACCORDANCE WITH AASHTO LRFD BRIDGE DESIGN SPECIFICATIONS, 10TH EDITION 2024 AND UDOT STRUCUTURES DESIGN AND DETAILING MANUAL, OCTOBER 2022 WITH REVISIONS THROUGH 2024.

GENERAL NOTES

1. ALL CONDUIT SUPPORT AND CONNECTION DETAILS ARE SCHEMATIC IN NATURE AND MAY NOT REPRESENT THE ACTUAL CONDITIONS. DIMENSION SHOWN ARE BASED ON EXISTING DRAWINGS. VERIFY ALL DIMENSIONS BEFORE FABRICATION OF HARDWARE OR COMPONENTS. COMPLETE VERIFICATION BEFORE BEGINNING CONSTRUCTION.
2. CONDUITS AND CONDUIT SUPPORT BRACKETS, SIZES AND MEMBER SHAPES ARE SHOWN SCHEMATICALLY ONLY.
3. USE RIGID METAL CONDUIT FOR ALL EXPOSED CONDUIT ATTACHED TO BRIDGE STRUCTURE. USE FLEXIBLE CONDUIT AT BRIDGE ENDS WHERE SHOWN. PVC CONDUIT MAY BE USED BENEATH GRADE.
4. USE 36" MINIMUM BEND RADIUS FOR ALL CONDUIT.
5. OBTAIN ENGINEER APPROVAL FOR ALTERNATIVES AND DEVIATIONS PROPOSED BY THE CONTRACTOR.
6. PROVIDE SUFFICIENT SLACK IN THE FIBER OPTIC CABLE OUTSIDE OF THE BRIDGE LIMITS TO ALLOW FOR TEMPORARY RELOCATION DURING FUTURE BRIDGE CONSTRUCTION WORK.
7. VERIFY UTILITY LOCATIONS BEFORE CONSTRUCTION. PROTECT EXISTING UTILITIES IN PLACE UNLESS SHOWN OTHERWISE.
8. DO NOT SCALE DRAWINGS. HORIZONTAL DIMENSIONS ARE PLAN. VERTICAL DIMENSIONS ARE PLUMB.
9. DURING FUTURE BRIDGE REHABILITATION, REPAIR, OR REPLACEMENT, THE FULL COST OF TEMPORARY OR PERMANENT RELOCATION OR REMOVAL OF THIRD-PARTY OWNED FIBER OPTIC OR ELECTRICAL UTILITIES WITHIN CONDUITS SHOWN IS THE RESPONSIBILITY OF THAT THIRD-PARTY.

REV NO	DATE	BY	REVISION REMARKS

DESIGN IW 10/25 CHECK AB 10/25
DRAWN RW 10/25 CHECK AB 10/25

11/18/2025 DATE
ENGINEER OF RECORD (EOR)

UTAH DEPARTMENT OF TRANSPORTATION
STRUCTURES DIVISION
AECOM

JURASSIC US-40 FIBER OPTICS
STARVATION RESERVOIR BRIDGE
SUMMARY AND GENERAL NOTES

PIN 22898
PROJECT NUMBER F-0040(249)51

DUCHESNE
COUNTY

C 560
STRUCTURE NUMBER

C 560R9
DRAWING NUMBER

SHEET 1 OF 3

DGN Files:pw:/udot-pw.bentley.com:udot-pw-01/Documents/UDOT Projects/Region 3 Projects/22898_JURASSIC_US-40_FIBER_OPTICS_-_SEGMENT_B/Structures/22898_0C 560R9_01_SUMMARY AND GENERAL NOTES.DGN
18-NOV-2025

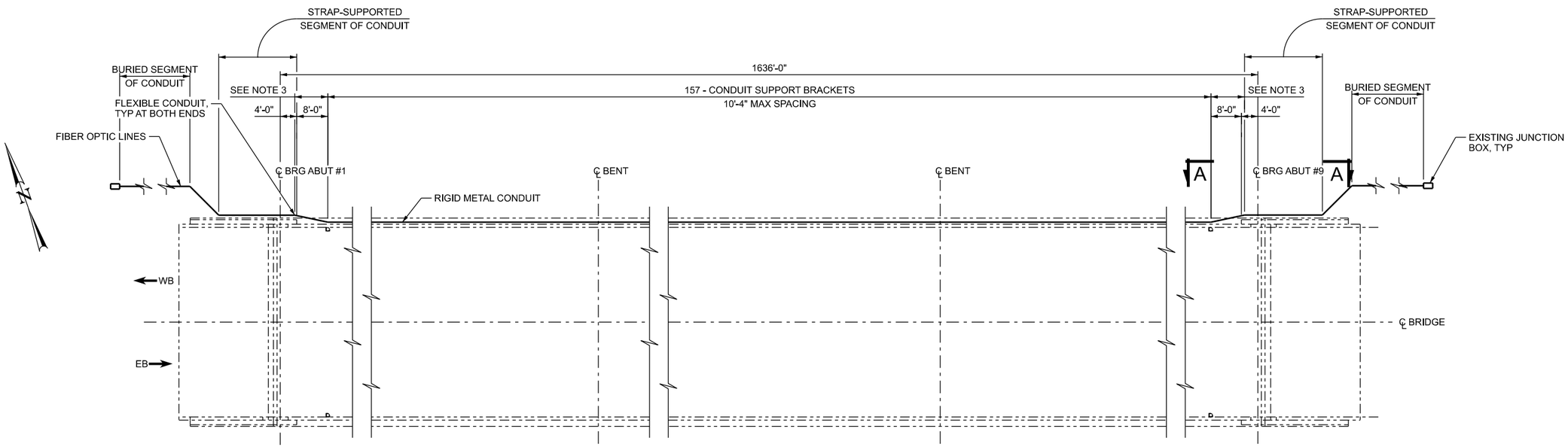

C 560 PLAN

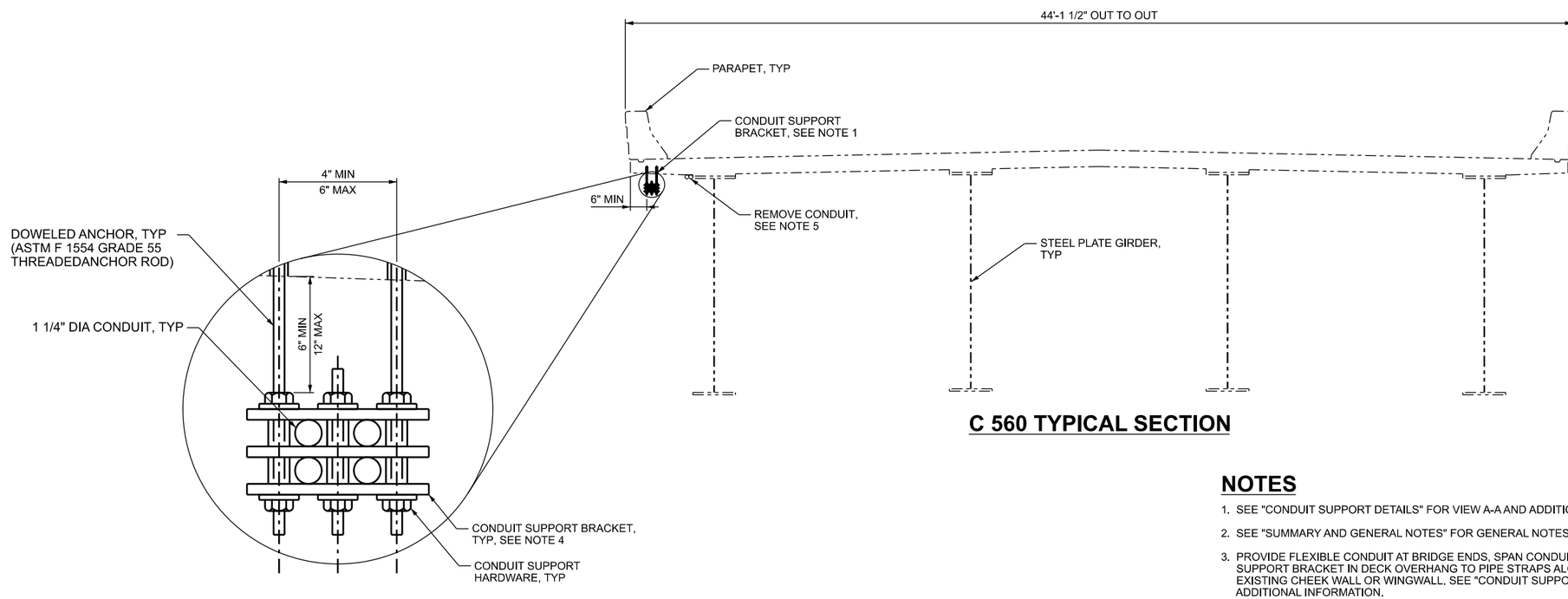

C 560 TYPICAL SECTION

NOTES

1. SEE "CONDUIT SUPPORT DETAILS" FOR VIEW A-A AND ADDITIONAL INFORMATION NOT SHOWN.
2. SEE "SUMMARY AND GENERAL NOTES" FOR GENERAL NOTES.
3. PROVIDE FLEXIBLE CONDUIT AT BRIDGE ENDS, SPAN CONDUIT FROM LAST CONDUIT SUPPORT BRACKET IN DECK OVERHANG TO PIPE STRAPS ALONG EXPOSED FACE OF EXISTING CHEEK WALL OR WINGWALL. SEE "CONDUIT SUPPORT DETAILS" FOR ADDITIONAL INFORMATION.
4. PROVIDE DESIGN AND DETAILS FOR CONDUIT SUPPORT BRACKET CAPABLE OF SIMULTANEOUSLY SUPPORTING SERVICE LOADS OF 250 LBS VERTICALLY AND 150 LBS HORIZONTALLY.
5. REPAIR ANY SPALLS, HOLES OR OTHER DAMAGE CAUSED BY OR LEFT BEHIND FROM REMOVING EXISTING CONDUIT SUPPORT HARDWARE (FIO EST QTY: 134 SQ FT).
6. SEE ATMS PLANS FOR EXACT QUANTITY AND LOCATIONS OF JUNCTION BOXES AND CONDUITS. SEE ATMS PLANS FOR INFORMATION NOT SHOWN.

REV NO	DATE	BY	REVISION REMARKS

DESIGN IW 10/25 CHECK AB 10/25
DRAWN RW 10/25 CHECK AB 10/25

11/18/2025 DATE
ENGINEER OF RECORD (EOR)

UTAH DEPARTMENT OF TRANSPORTATION
STRUCTURES DIVISION
AECOM

JURASSIC US-40 FIBER OPTICS
STARVATION RESERVOIR BRIDGE
C 560 PLAN AND DETAILS

PIN 22898
PROJECT NUMBER F-0040(249)51

DUCHESNE
COUNTY

C 560
STRUCTURE NUMBER

C 560R9
DRAWING NUMBER

SHEET 2 OF 3

DGN Files: pw://udot-pw.bentley.com:udot-pw-01/Documents/UDOT Projects/Region 3 Projects/22898_JURASSIC_US-40_FIBER_OPTICS_-_SEGMENT_B/Structures/22898_0C 560R9_02_C 560 PLAN AND DETAILS.DGN
18-NOV-2025

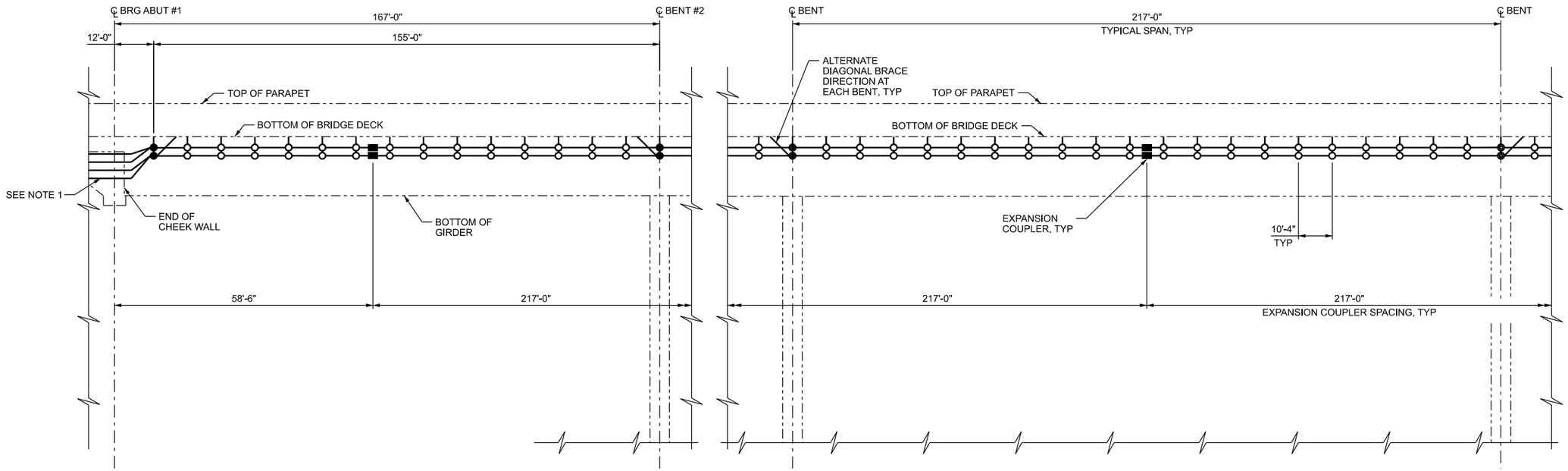

PARTIAL ELEVATION

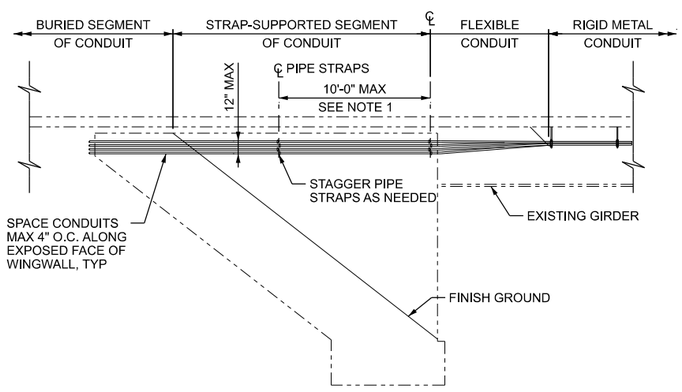

VIEW A-A

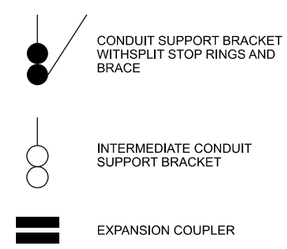

LEGEND

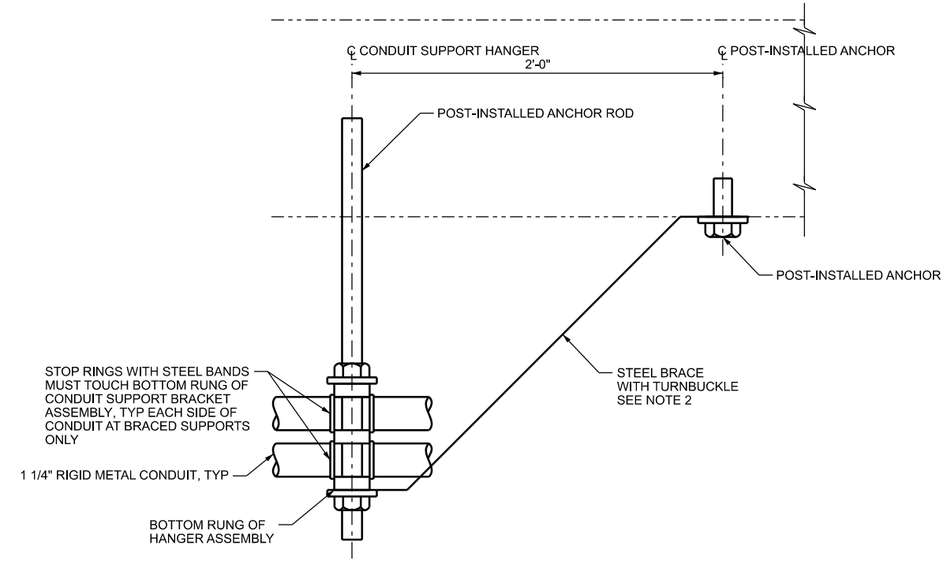

TYPICAL SPLIT STOP RING INSTALLATION

NOTE

1. ATTACH RIGID METAL CONDUIT TO EXPOSED FACE CHEEK WALL AND WINGWALL USING TWO-HOLE GALVANIZED PIPE STRAPS AND 1/4" DIA CONCRETE SCREWS.
2. PROVIDE DESIGN AND DETAILS FOR STEEL BRACE WITH TURNBUCKLE AND ANCHORAGE CAPABLE OF SUPPORTING A SERVICE LOAD OF 150 LBS HORIZONTALLY.

REV NO	DATE	BY	REVISION REMARKS
			DESIGN IW 10/25 CHECK AB 10/25
			DRAWN RW 10/25 CHECK AB 10/25

11/18/2025 DATE
ENGINEER OF RECORD (EOR)

UTAH DEPARTMENT OF TRANSPORTATION
STRUCTURES DIVISION
AECOM

JURASSIC US-40 FIBER OPTICS
STARVATION RESERVOIR BRIDGE
CONDUIT SUPPORT DETAILS

PIN 22898
PROJECT NUMBER F-0040(249)51

DUCHESNE
COUNTY

C 560
STRUCTURE NUMBER

C 560R9
DRAWING NUMBER

SHEET 3 OF 3

DGN File: pw://udot-pw.bentley.com:udot-pw-01/Documents/UDOT Projects/Region 3 Projects/22898_JURASSIC_US-40_FIBER_OPTICS_-_SEGMENT_B/Structures/22898_0C 560R9_03_CONDUIT SUPPORT DETAILS.DGN
18-NOV-2025

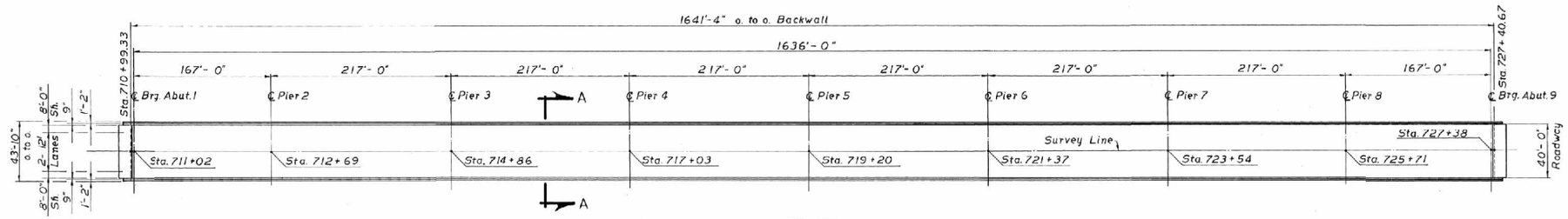

PLAN

All Abutments and Piers are perpendicular to Survey Line

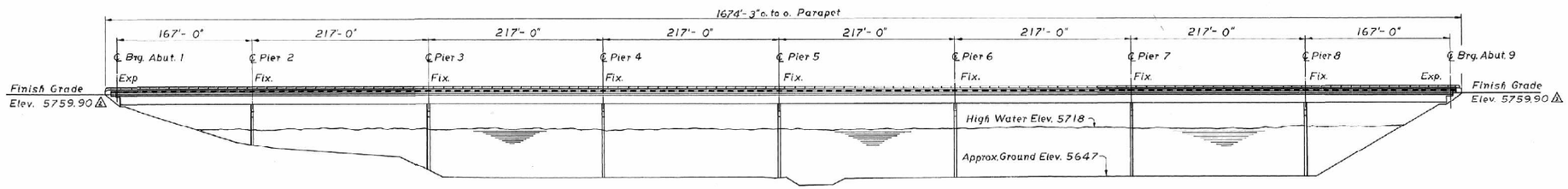

ELEVATION

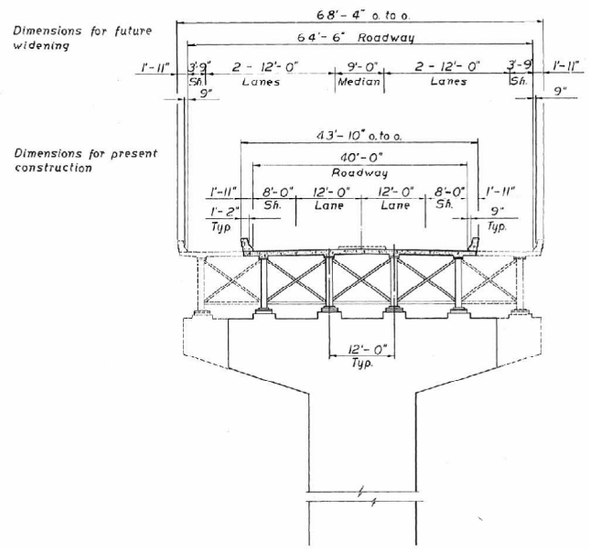

SECTION A-A

QUANTITIES

ITEM	ESTIMATED	UNIT	AS CONST.
Excavation for Structure (Unclass)	6,340	Cu.Yd.	7,011.00
Class A Concrete (AE)	5,497	Cu.Yd.	5,691.80
Class AA Concrete (AE)	2,511	Cu.Yd.	2,511.00
⚠ Reinforcing Steel	1,688,617	Lb.	1,688,343.00
⚠ Structural Steel	3,426,009	Lb.	3,426,009.00
Metal Railing (Single Rail)	3,349	Lin.Ft.	3,349.00
Structural Back Fill	3,250	Cu. Yd.	3,759.70
Excavation Seal	1,500	Sq. Yd.	175.70
Compaction	100	Hr.	31.50

INDEX OF SHEETS

1- Situation & Layout
2- Soil Data
3- Foundation Plan & Profile
4- Abutment Detail
5- Pier Detail
6- Framing Plan
7- Girder Details
8- Diaphragm Details
9- Steel Details
10- Steel Details
11- Deck Plan & Section
12- Screed Elevations
13- Expansion Dam
14- Parapet Details
15- Railing Details
16- Reinforcing Steel Schedule
17- Reinforcing Steel Schedule

GENERAL NOTES

1- Materials, construction and workmanship shall be in accordance with the Utah Department of Highways Standard Specifications for Road and Bridges Construction, Interim Issue March 1966 Edition and Supplements thereto which are in effect at the date of request for bids.

2- All reinforcing steel shall be intermediate grade billet steel, conforming with A.A.S.H.O. designation M-31. Deformations shall conform with A.A.S.H.O. designation M-137.

3- All structural steel shall be structural carbon steel conforming with A.A.S.H.O. designation M-183 (A.S.T.M. A-36) except as noted

4- Exposed concrete corners shall be chamfered ¾" except where noted otherwise.

5- Cover to reinforcing steel shall be 2" except where noted otherwise

DESIGN DATA

HS20-44 Loading in accordance with A.A.S.H.O. Specifications of 1965 or Alternate truck as shown.

Cast-in-place Concrete: $f'c = 3{,}000$ psi, fs (Reinf) $= 20{,}000$ psi.
$fc = 1{,}200$ psi., $n = 10$

Structural Steel: $fs = 20{,}000$ psi.

Wearing Surface: 1" Concrete, 15 lb/sq.ft. Future Surface.

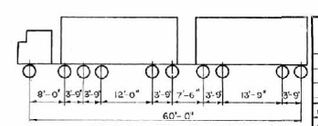

All Axles 18k - Total 180k

⚠	M.U.S.	10-18-68	Structural Steel
⚠	M.U.S.	10-17-68	Elevation
⚠	W.L.A.	6-17-68	Reinforcing Steel
NO.	BY	DATE	REMARKS

REVISIONS

UTAH STATE DEPARTMENT OF HIGHWAYS
SALT LAKE CITY, UTAH
STRUCTURES DIVISION

US 40 RELOCATION
STARVATION RESERVOIR BRIDGE
SITUATION & LAYOUT

DESIGNED MW-DLS 11-5-68	CHECKED DLS-MW 11-5-68	NF-15-2(1) F-015-2(8) PROJECT NUMBER	1st Cont.
DRAWN M.U.S.	CHECKED MW 11-5-68		
QUANT. W.H.G. 12-2-68	CHECKED MW 11-5-68	719 + 20 STATION	
APPROVAL RECOMM. DATE	GROUP LEADER		
APPROVED 9/22/68 DATE	A. E. Mansbery CHIEF STRUCTURAL ENGR.	DUCHESNE COUNTY	
BR. NO.	DWG. NO. C-560	1 of 17	

Final: Ken Jr. Sep. 25 69

FOR INFORMATION ONLY

DGN File: JP PwPw8845\395\16485_C-560-81 For information only
27-OCT-2020 16485

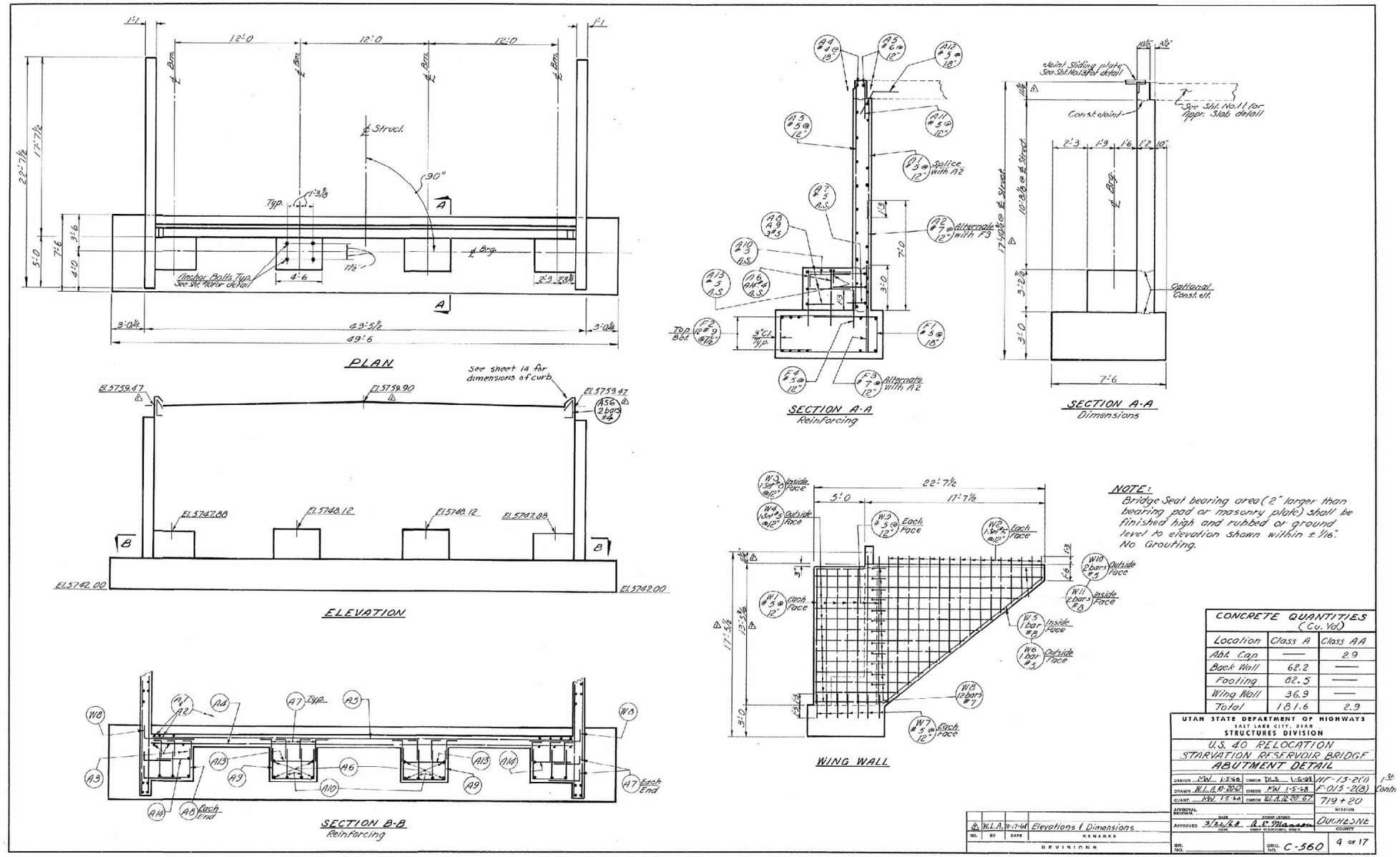

DGN File: JP Pathd8415595\16485_C-560-84.for information only.dgn
27-OCT-2020 16485

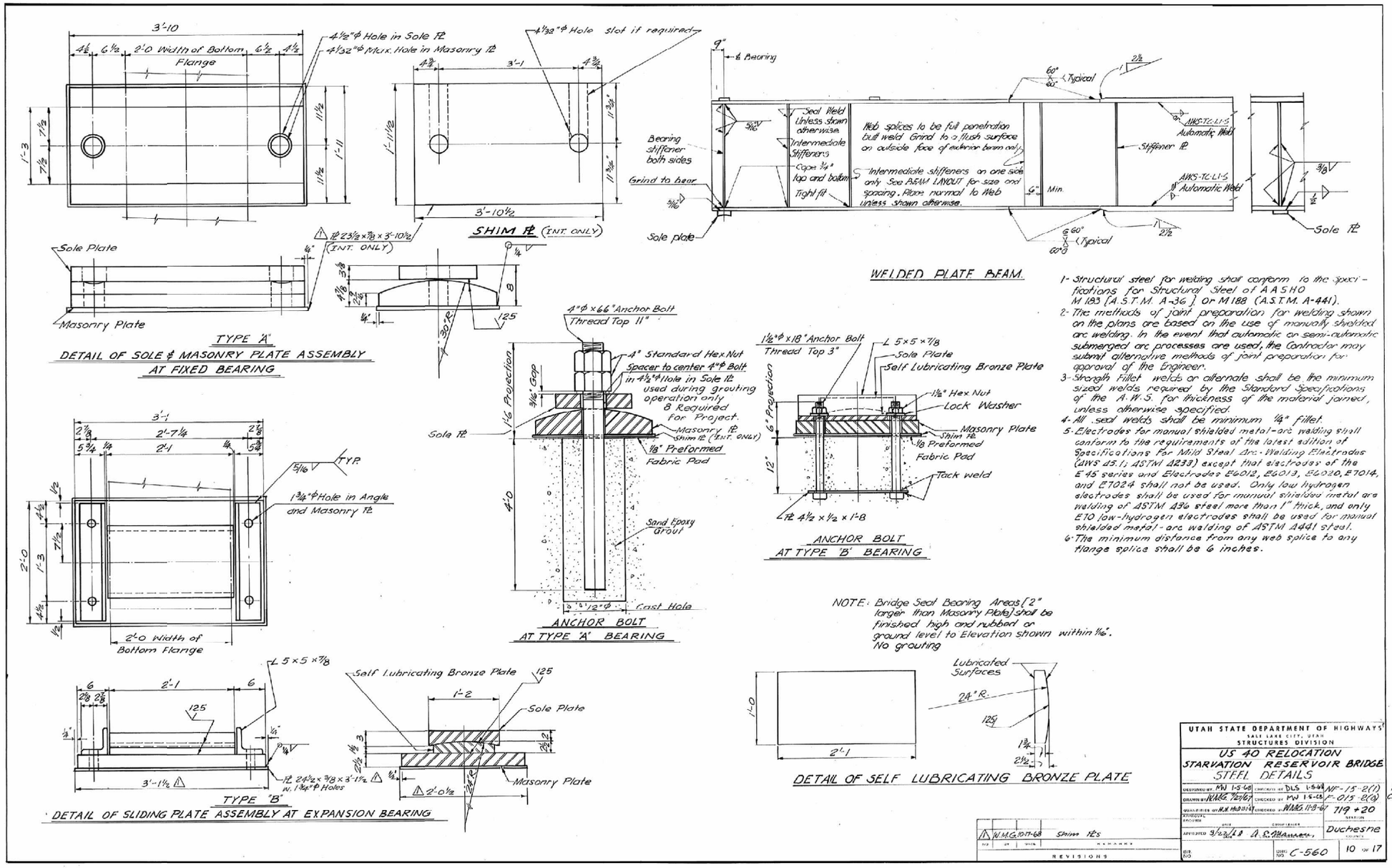

Original

SS-3

FOR INFORMATION ONLY

27-OCT-2020 16485 DGN File: JP PwPw0816595\16485_C-560-18 For information only

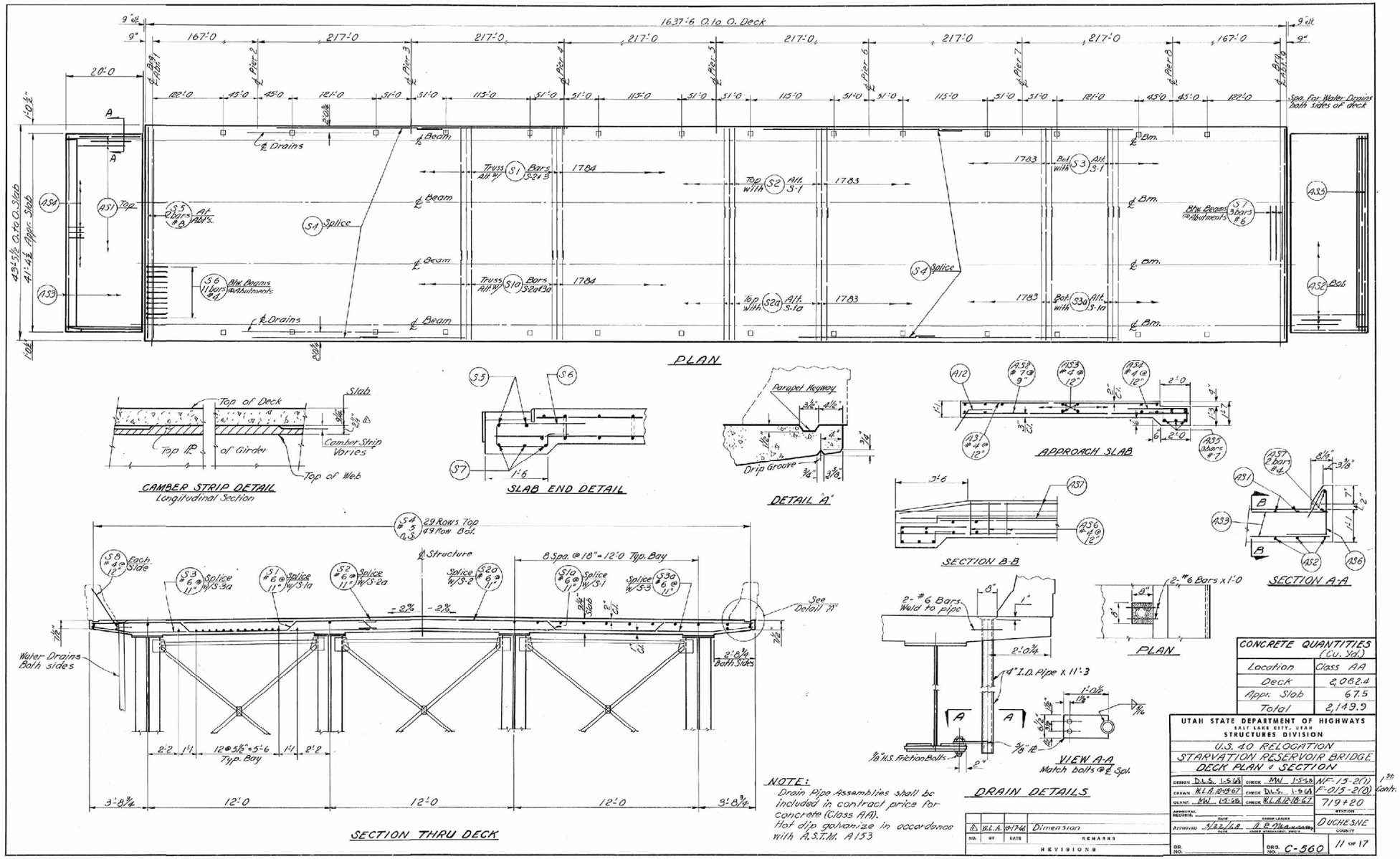

FOR INFORMATION ONLY

27-OCT-2020 16485 DGN File: JP PwPw8845595\16485_C-560-11 For information only

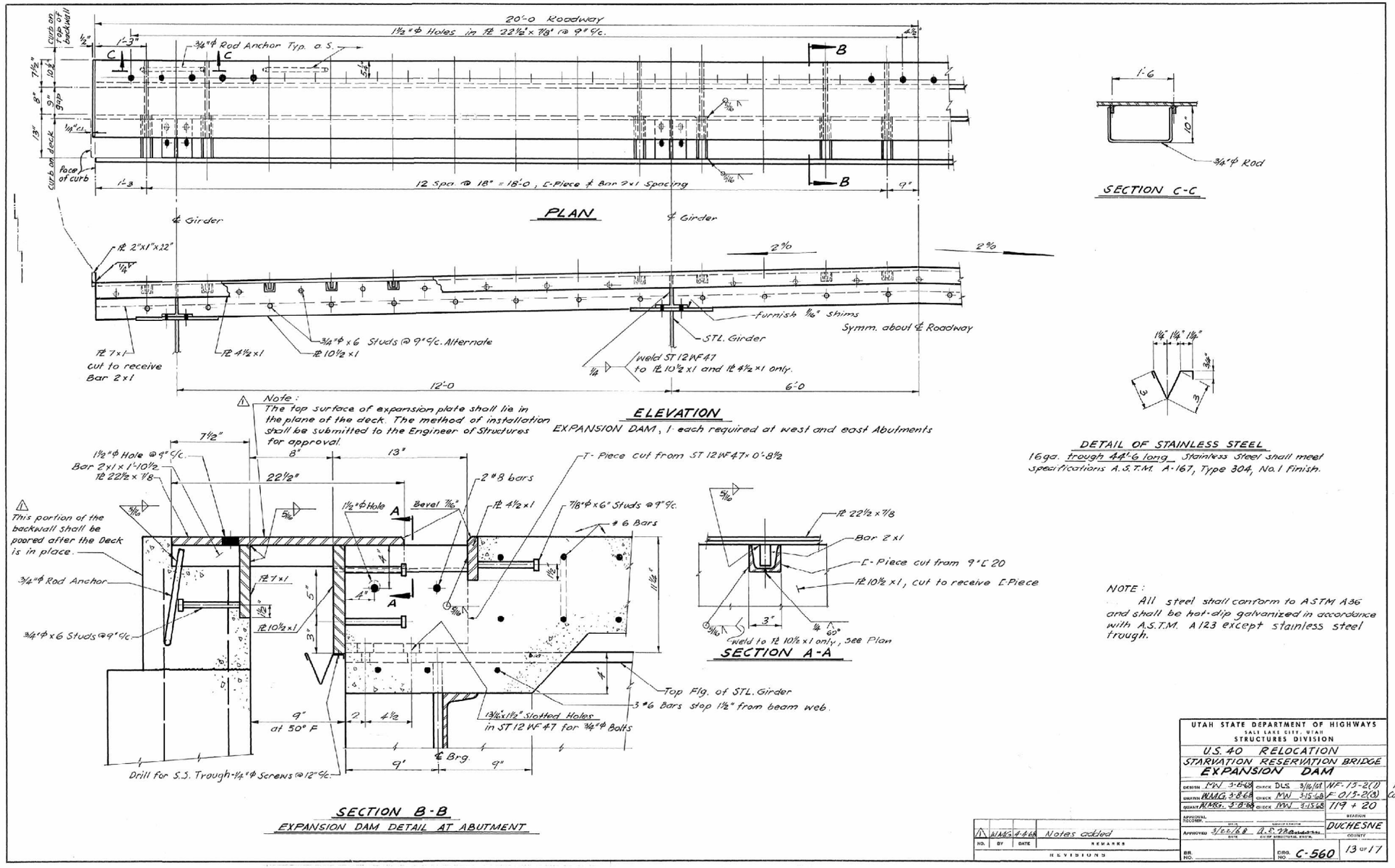

FOR INFORMATION ONLY

27-OCT-2020 16485 DGN File: JP PwPw8415595\16485_C-560-13.for information only

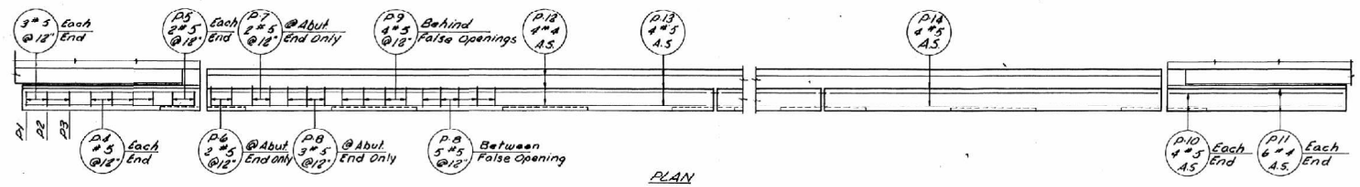

PLAN

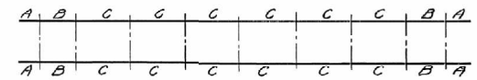

KEY PLAN

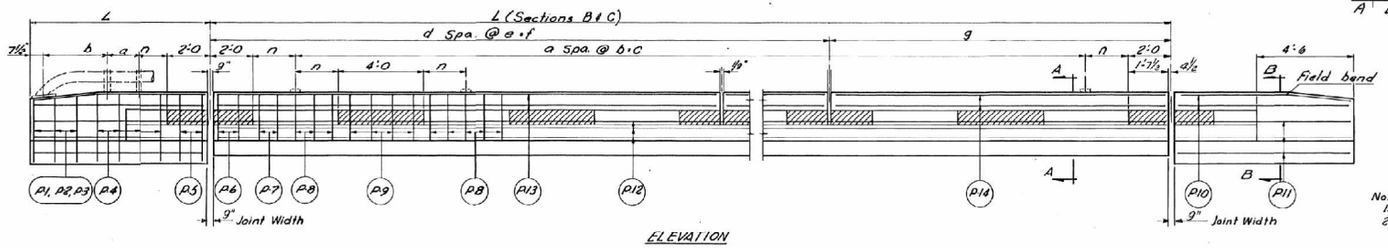

ELEVATION

Notes:
1. See sheet no. 15 for details of Railing installation.
2. All longitudinal bars are shown in reinforcing schedule with subscripts which refer to the parapet section where they are located (See Key Plan).
3. Forms for false openings shall be tapered approximately ¼" to facilitate removal of forms.
4. Cover to reinforcing steel shall be 1½" minimum.
5. Payment for 1" ϕ Galvanized pipe sleeves shall be included in contract price for Class A.A. Concrete (A.E.).
6. Drawing number to be located on right-hand side of approach parapet.

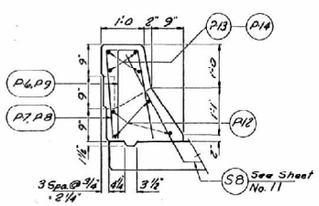

SECTION A-A

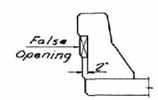

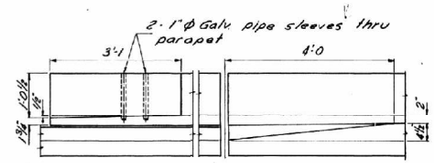

PLAN

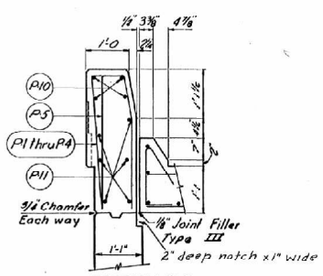

SECTION B-B

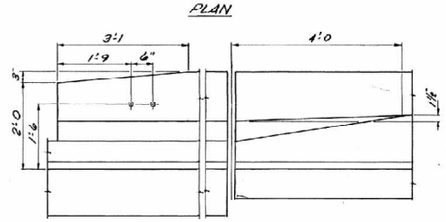

ELEVATION

PARAPET END DETAILS

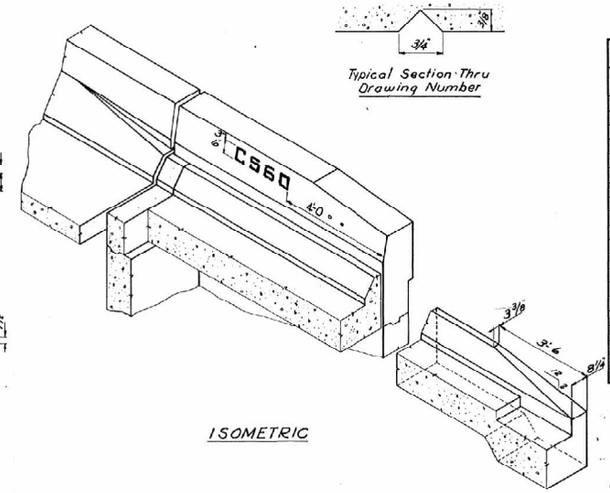

ISOMETRIC

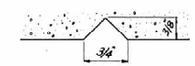

Typical Section Thru Drawing Number

SCHEDULE

Parapet Section	No. of Sections	a	b	c	d	e	f	g	n	L
A	4	8'-4 1/16	4'-10 1/16						2'-2	18'-0
B	4	19	8'-9 7/8	159'-0 3/8	6	25'-2 1/8	151'-9 3/16	16'-9 3/16	2'-2 1/16	168'-1 1/2
C	12	25	8'-4 1/16	208'-7 7/8	8	25'-0 1/8	200'-3 3/16	16'-8 1/16	2'-2 1/16	217'-0

Concrete Quantities for all Parapets - 359 Cu.Yd. Class AA

NO.	BY	DATE	REMARKS
			REVISIONS

UTAH STATE DEPARTMENT OF HIGHWAYS
SALT LAKE CITY, UTAH
STRUCTURES DIVISION

U.S. 40 RELOCATION
STARVATION RESERVOIR BRIDGE
PARAPET DETAIL

DESIGN DLS 1-16-68	CHECK MW 3-27-68		IF-15-2(1) 1st Contr.
DRAWN W.L.A. 3-25-68	CHECK MW 3-27-68		F-015-2(8)
QUANT. W.L.A. 3-25-68	CHECK MW 3-27-68		719+20 STATION
APPROVAL RECOMM.	DATE	GROUP LEADER	
APPROVED 3/22/68	DATE	L. E. Mackenzie CHIEF STRUCTURAL ENGR.	DUCHESNE COUNTY
BR. NO.		DWG. NO. C-560	14 of 17

FOR INFORMATION ONLY

27-OCT-2020 16485 DGN File: JP PwPnd8415595\16485_C-560-14.for information only.dgn

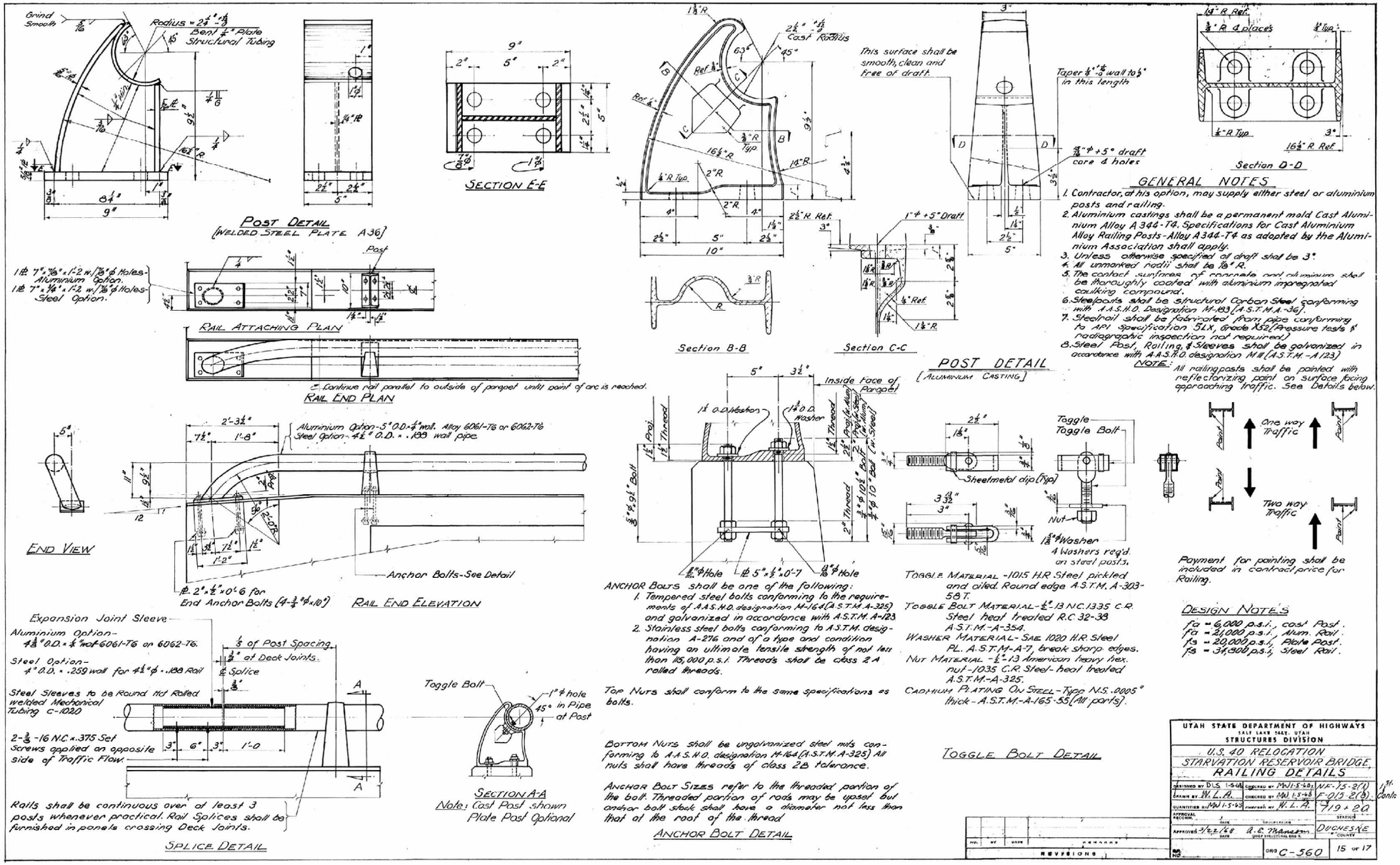

ORIGINAL

FOR INFORMATION ONLY

27-OCT-2020 16485 DGN File: IP PwPw\8415\595\16485_C-560-15 For information only.dgn

MARK	LOCATION	SIZE NO.	NO. BARS	L'GTH.	TOTAL LENGTH	SKETCH
A1	Abutment	5	84	8'-0	672'-0	
A2		7	84	9'-9	819'-0	
A3		5	84	14'-8	1232'-0	
A4		4	20	41'-0	820'-0	
A5		6	32	41'-0	1312'-0	
A6		5	36	3'-7	129'-0	
A7			108	2'-10	306'-0	2'-4
A8			12	5'-5	65'-0	2'-6
A9			12	10'-4	124'-0	4'-2
A10			16	3'-4	53'-4	2'-6
A11			84	2'-6	210'-0	
A12			56	3'-0	168'-0	1'-6
A13			4	5'-11	23'-8	4'-3
A14	Abutment	5	4	5'-7	22'-4	2'-6
② A31	Appr. Slab	4	84	17'-8	~~1484'-4~~ 1484'-0	
② A32		7	112	19'-8	~~2203'-0~~ 2202'-8	
A33		4	80	41'-0	3280'-0	
② A34		4	84	6'-8	~~560'-4~~ 560'-0	3'-0
A35		7	6	41'-0	246'-0	
A36		4	80	4'-0	320'-0	
A37	Appr. Slab	4	8	19'-8	157'-4	
C1	Column	5	778	19'-8	15,300'-8	
C2		18s	392	60'-0	23,520'-0	
C3			140	35'-0	4900'-0	
② C4			100	53'-0	~~5300'-0~~ 5300'-0	
C5			80	37'-0	2960'-0	
② C6			20	48'-0	~~960'-0~~ 960'-0	△
C7			16	32'-0	512'-0	
② C8			20	23'-0	~~460'-0~~ 460'-0	
C9		18s	16	7'-0	112'-0	
C10		5	3011	9'-7	28,855'-9	4'-4
③ C100			3011	4'-5	~~13,298'-8~~ 13,298'-8	1'-9
C11			902	7'-6	6765'-0	4'-6
② C12	Column	5	3316	4'-5	~~14,654'-4~~ 14,645'-8	Isometric

MARK	LOCATION	SIZE NO.	NO. BARS	L'GTH.	TOTAL LENGTH	SKETCH
② C13	Column	5	1120	2'-4	~~2619'-4~~ 2613'-4	Isometric
② C14		5	5240	2'-7	~~13,536'-6~~ 13,536'-8	1'-10½ 6" 3/8 Lg. 2½
C15	Column	8	902	14'-6	13,079'-0	
F1	Footing	4	68	19'-10	1348'-8	3'-11 3'-11 2'-6 7'-0
F2		9	48	51'-1	2452'-0	49'-2 1-Spl. @ 1'-11
F3		7	84	5'-9	483'-0	
F4		5	84	2'-6	210'-0	
② F5		18s	140	9'-0	~~1260'-0~~	△ 1260'-0
F6		18s	140	15'-0	2100'-0	
F7		6	120	31'-4	3760'-0	9'-8 10'-10
② F8		5	54	30'-8	~~1656'-0~~ ~~1629'-4~~	19'-8 5'-3
F9		11	606	30'-0	18,180'-0	
F10		11	503	40'-0	20,120'-0	
F11		6	21	21'-4	448'-0	9'-8 5'-10
F12		18s	140	20'-0	2800'-0	
F13		11	101	26'-8	2693'-4	
F14	Footing	18s	112	25'-0	2800'-0	

MARK	LOCATION	SIZE NO.	NO. BARS	L'GTH.	TOTAL LENGTH	SKETCH
P1	Parapet	5	4	6'-5	25'-8	
P2			4	6'-7	26'-4	
P3			4	6'-9	27'-0	
P4			52	6'-11	359'-8	
P5			8	6'-7	52'-8	
P6			8	4'-5	35'-4	
P7			8	4'-9	38'-0	
P8			1932	4'-9	9272'-0	
P9			1360	4'-5	6,090'-0	
P10			16	17'-6	280'-0	
P11		5	24	17'-6	420'-0	
P12		4	8	1632'-0	13,056'-0	163'-7 41-Spl. @ 1'-1
P13 B		5	96	24'-9	2376'-0	
P13 C			384	24'-0	9,216'-0	
P14 B			16	16'-5	262'-8	
P14 C	Parapet	5	48	16'-4	784'-0	
S1	Slab	6	1783	20'-11	37,294'-6	See Sketch S-1
S1a			1783	28'-9	51,261'-3	See Sketch S-1a
S2			1784	25'-0	44,600'-0	
S2a			1784	19'-0	33,896'-0	
S3			1784	19'-0	33,896'-0	2'-7 16'-5
S3a		6	1784	24'-7	43,856'-8	22'-0 2'-7
S4		5	78	1682'-0	131,196'-0	163'-7 41-Spl's @ 1'-1
S5		8	4	43'-2	172'-8	
S6		4	66	6'-9	445'-6	4'-0 6" 3½" 2'-9" 1'-3
S7		6	18	11'-8	210'-0	
S8	Slab	4	2718	3'-10	10,465'-8	1'-7 2'-10 2'-4 1'-0

MARK	LOCATION	SIZE NO.	NO. BARS	L'GTH.	TOTAL LENGTH	SKETCH
W1	Wing Wall	5	40	13'-2	526'-8	2'-8 14'-2
W2		5	64	16'-10	1077'-4	16 bars makes 1 set; 14'-2 2'-8
W3		8	24	28'-2	676'-0	7'-0 21'-2; 12 bars makes 1 set; 21'-2 7'-0
W4		5	24	28'-2	676'-0	7'-0 21'-2; 12 bars makes 1 set; 21'-2 7'-0
W5		8	4	20'-3	81'-0	
W6		5	4	20'-3	81'-0	
W7		5	56	2'-6	140'-0	
W8		7	48	6'-6	312'-0	5'-0 1'-6
W9		5	16	5'-11	94'-8	
W10		5	8	22'-3	178'-0	
W11	Wing Wall	8	8	22'-3	178'-0	

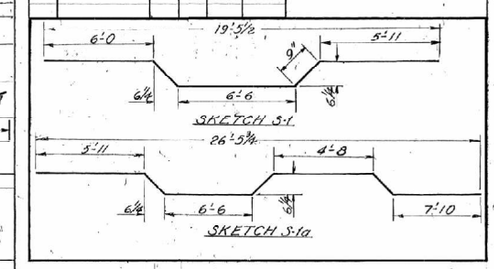

NO.	BY	DATE	REMARKS
②	Epell	7-26-61	Final - As Constructed
△	MW	5-20-68	Dimensions Changed

REVISIONS

UTAH STATE DEPARTMENT OF HIGHWAYS
SALT LAKE CITY, UTAH
STRUCTURES DIVISION

U.S. 40 RELOCATION
STARVATION RESERVOIR BRIDGE
REINFORCING STEEL SCHEDULE

DESIGNED BY MW 1-5-68 CHECKED BY DLS 1-5-68
DRAWN BY W.L.A. CHECKED BY MW 1-5-68
QUANTITIES BY MW 1-5-68 CHECKED BY W.L.A.
APPROVAL RECOMMENDED BY GROUP LEADER
APPROVED 3/23/62 A. P. Williamson CHIEF STRUCTURAL ENGR.

NF-15-2(1) 1 Sh. Contn.
F-015-2(8)
719 + 20
STATION
DUCHESNE COUNTY
BR. NO.
DRG. NO. C-560
16 of 17

FOR INFORMATION ONLY

REVISED BY DATE
REVISED BY DATE
REVISED BY DATE
REVISED BY DATE

DGN File: JP PwPw8415\595\16485_C-560-16.for information only

27-OCT-2020 16485

MARK	LOCATION	SIZE NO.	NO. BARS	LENGTH	TOTAL LENGTH	SKETCH
H1	Pier Cap	11	112	48'-8	5451'-0	
H2		8	98	17'-6	1715'-0	
H3		5	70	49'-9	3482'-6	48'-8; 1-Spl. @ 1:1
H4		5	14	45'-1	631'-2	44'-0; 1-Spl. @ 1:1
H5		5	14	32'-3	451'-6	
H6		6	28	29'-11	837'-8	A 13'-8
H7				29'-5	826'-0	13'-3 7/16"
H8				29'-2	816'-8	13'-3 1/2"
H9				28'-9	805'-0	13'-1 1/4"
H10				28'-5	795'-8	12'-11"
H11				28'-0	784'-0	12'-8 7/16"
H12				27'-8	774'-8	12'-6 1/2"
H13				27'-3	763'-0	12'-4 1/16"
H14				26'-11	753'-8	12'-2"
H15				26'-6	742'-0	11'-11 7/16"
H16				26'-2	732'-8	11'-9 1/2"
H17				25'-9	721'-0	11'-7 1/4"
H18				25'-5	711'-8	11'-5"
H19				25'-0	700'-0	11'-2 7/16"
H20				24'-8	690'-8	11'-0 1/2"
H21				24'-3	679'-0	10'-10 7/16"
H22				23'-11	669'-8	10'-8"
H23				23'-6	658'-0	10'-5 7/16"
H24				23'-2	648'-8	10'-3 1/2"
H25				22'-9	637'-0	10'-1 1/4"
H26				22'-5	627'-8	9'-11"
H27				22'-0	616'-0	9'-8 7/16"
H28				21'-8	606'-8	9'-6 1/2"
H29				21'-3	595'-0	9'-4 1/16"
H30				20'-11	585'-8	9'-2"
H31				20'-6	574'-0	8'-11 7/16"
H32	Pier Cap	6	28	20'-2	564'-8	8'-9 1/2"
H33	Pier Cap	6	14	37'-3	521'-6	A 13'-8
H34				36'-10	515'-8	13'-5 7/16"
H35				36'-6	511'-0	13'-3 1/2"
H36				36'-1	505'-2	13'-1 1/4"
H37				35'-9	500'-6	12'-11"
H38				35'-4	494'-8	12'-8 7/16"
H39				35'-0	490'-0	12'-6 1/2"
H40				34'-7	484'-8	12'-4 1/16"
H41				34'-3	479'-6	12'-2"
H42				33'-10	473'-8	11'-11 7/16"
H43				33'-6	469'-0	11'-9 1/2"
H44				33'-1	463'-2	11'-7 1/4"
H45				32'-9	458'-6	11'-5"
H48				31'-7	442'-2	10'-10 7/16"
H49				31'-3	437'-6	10'-8"
H50				30'-10	431'-8	10'-5 7/16"
H51				30'-6	427'-0	10'-3 1/2"
H54				29'-4	410'-8	9'-8 7/16"
H55				29'-0	406'-0	9'-6 1/2"
H56				28'-7	400'-2	9'-4 1/16"
H57				28'-3	395'-6	9'-2"
H58				27'-10	389'-8	8'-11 7/16"
H59			14	27'-6	385'-0	8'-9 1/2"
H60		6	84	8'-0	672'-0	
H61		5	70	6'-10	478'-4	4'-8; 1'-1
H62		5	56	7'-0	392'-0	5'-0; 1'-0
H63	Pier Cap	7	112	3'-1	369'-4	3'-1; 1'-0

MARK	LOCATION	SIZE NO.	NO. BARS	LENGTH	TOTAL LENGTH	SKETCH
H46	Pier Cap	6	14	32'-8	457'-4	A 11'-2 7/16"
H52			14	30'-5	425'-10	10'-1 7/16"
H47			14	32'-4	452'-8	11'-0 1/2"
H53			14	30'-1	421'-6	9'-11"
H64	Pier Cap	6	168	10'-8	1792'-0	
H65	Pier Cap	8	224	3'-0	672'-0	

34,431'-2
269,613'-2
284,163'-11
4,632'-0

NOTE:
All dimensions are out to out unless otherwise specified.

~~34,431'-10~~	No. 4	Bars	@	.668 #/ft.	=	~~23,045~~ Lbs.	23,004	②
~~269,620'-1~~	" 5	"	"	1.043 "	=	~~281,214~~ "	281,207	②
~~284,162'-9~~	" 6	"	"	1.502 "	=	~~426,813~~ "	426,814	②
~~4,642'-4~~	" 7	"	"	2.044 "	=	~~9,489~~ "	9,468	②
16,573'-8	" 8	"	"	2.670 "	=	~~44,453~~ "	44,252	②
2,432'-0	" 9	"	"	3.400 "	=	8,337 "		
46,444'-4	" 11	"	"	5.313 "	=	246,759 "		
47,684'-0	No. 18S	Bars	@	13.600 #/ft.	=	648,502 "		
				Total	=	~~1,688,617~~ Lbs.		
						1,688,343		②

NO.	BY	DATE	REMARKS
②	R.J.W.	9-25-69	Final-As Constructed
⚠	W.L.A.	6-19-68	H33 to H59

REVISIONS

UTAH STATE DEPARTMENT OF HIGHWAYS
SALT LAKE CITY, UTAH
STRUCTURES DIVISION

U.S. 40 RELOCATION
STARVATION RESERVOIR BRIDGE
REINFORCING STEEL SCHEDULE

VERIFIED BY M.W.I. 5-48 CHECKED BY D.L.S. LCW
DRAWN BY W.L.A. 1-87-67 CHECKED BY M.W.I. 5-48
QUANTITIES BY M.W.I. 5-48 CHECKED BY W.L.A. 2-86

NF 13-8(1) 1st Cont.
F-015-2(8)
719 + 20

APPROVAL RECOMM. DATE / CHIEF LEADER
APPROVED 3/27/68 DATE / DIR. OF STRUCTURAL ENGR. L. E. Manners
STATION
DUCHESNE
COUNTY

BR. NO.
DRG. C-560
17 of 17

ENG. AUTH. _____ CONSTN. AUTH. _____

FOR INFORMATION ONLY

DGN File: JP PwPw0845\395\16485_C-560-17 For information only
27-OCT-2020 16485

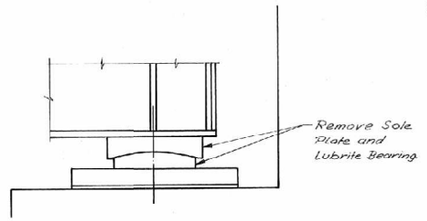

ELEVATION OF EXISTING BEARING

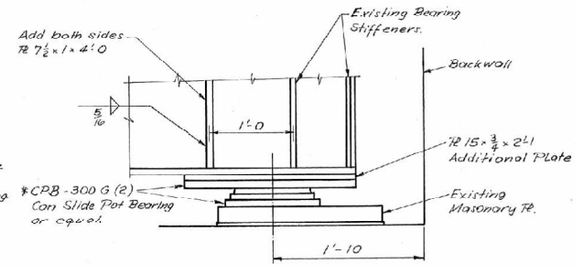

ELEVATION OF POT BEARING INSTALLATION

* Pot Bearing complete with sole plate sized as shown to be furnished by Bridge Bearing Manufacturer.

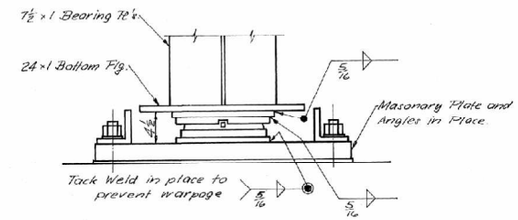

CROSS-SECTION THRU POT BEARING

GENERAL NOTES

1. Materials, construction, and workmanship shall be in accordance with the Utah Departmen of Transportation Standard Specifications for Road and Bridge Construction, Edition of 1970, and Supplements thereto which are in effect at the date of request for bids.
2. All reinforcing steel shall be deformed billet steel bars conforming to ASTM Designation A615-68, Grade 60.
3. All structural steel shall be structural carbon steel conforming to Designation M-183 except where noted otherwise.
4. Exposed concrete corners shall be chamfered ¾" except where noted otherwise.
5. Cover to reinforcing steel shall be 2" except where noted otherwise.
6. All cast-in-place concrete shall be Class AA (AE), Type III Cement, high early strength required.

DESIGN DATA

HS 20-44 or Interstate Alternate Loading in accordance with AASHTO Specifications of 1973 and Interim Specifications.

Cast-in-place Concrete: f_c = 1400 psi, f_s (Reinf.) = 24,000 psi, n = 8
Structural Steel: f_s = 20,000 psi.
Wearing Surface: 3" Bituminous Wearing Surface, 35 lb/sq.ft

QUANTITIES

ITEM	ESTIMATED	UNIT	AS CONST.
Advance Warning Device - Type B Stationary	250	Hour	581
Flagging	1,000	Hour	2
Removal of Concrete Materials & Expansion Joint	1	Lump	100%
Modifications to Structural Steel	1	Lump	100%
Bridge Bearings	1	Lump	100%
Expansion Joint	1	Lump	100%
Class "AA" Concrete (AE)	1	Lump	100%
Reinforcing Steel	6,089	Lb.	6088
Contingent Sum Pay Item	5,000	FORCE ACCOUNT	1959.14
Mobilization	1	Lump	100%

INDEX OF SHEETS

1-BEARING MODIFICATION WEST ABUTMENT
2-MODIFICATION OF EAST ABUTMENT
3-CONCRETE MODIFICATION EAST ABUTMENT
4-DIAPHRAGM DETAILS
5-EXPANSION DATA

NO.	BY	DATE	REMARKS
1	DC	9-1-78	Added Item

REVISIONS

UTAH DEPARTMENT OF TRANSPORTATION
SALT LAKE CITY, UTAH
STRUCTURES DIVISION

US-40 RELOCATION
STARVATION RESERVOIR BRIDGE
BEARING MODIFICATION WEST ABUTMENT

DESIGN MW 8-78 CHECK AOB 8-78
DRAWN [illegible] 8-78 CHECK MW 8-78
QUANT. [illegible] 8-78 CHECK MW 8-78
APPROVAL RECOM'D 8-15-78 A.O. [illegible] ASST. STRUCTURES ENGINEER
APPROVED Aug 15, 1978 [illegible] STRUCTURES ENGINEER

STATION 719+20
COUNTY DUCHESNE
DRG. NO. C-560R-2
SHT. 1 OF 5

PROJECT NUMBER NF-15(6)

Final PLY May 10th 1979

C-560R2

DGN File: IP PwPub84\95\95\16485\C-560R2-01 for information only.dgn
27-OCT-2020 16485

FOR INFORMATION ONLY

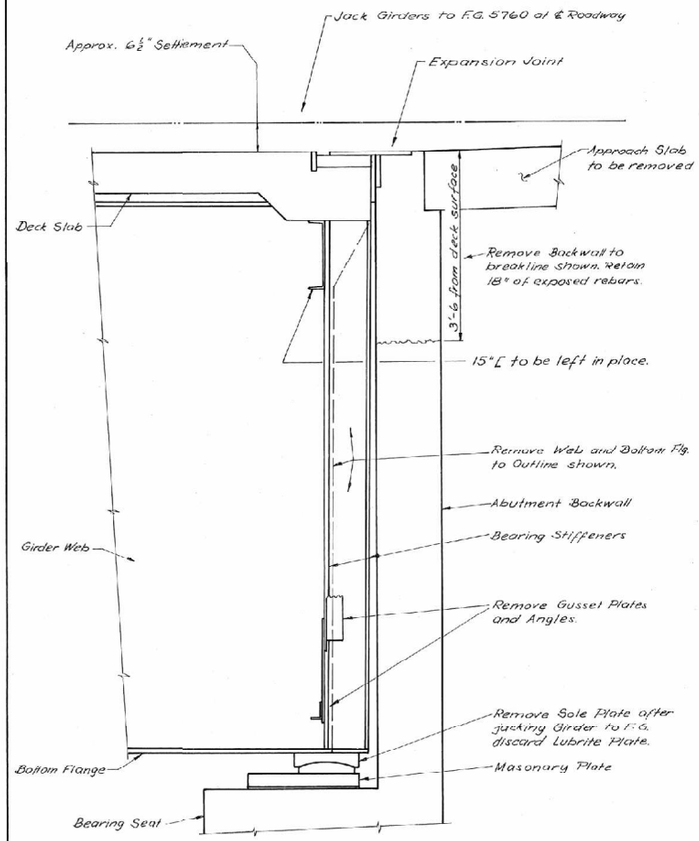

SECTIONAL ELEVATION AT EAST ABUTMENT

Showing present positions of Girder and Backwall and preparation needed to free and raise the Girder.

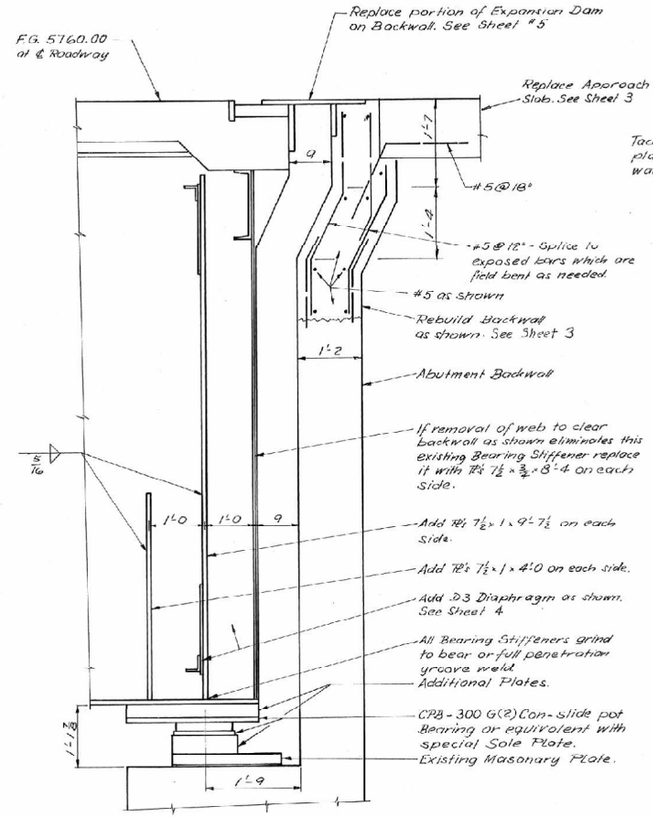

SECTIONAL ELEVATION AT EAST ABUTMENT

Showing work needed to raise the Girder and Approach Slab to correct elev. and to free the Girder for longitudinal movement.

* Pot Bearing complete with Sole Plate sized as shown to be furnished by Bridge Bearing Manufacturer.

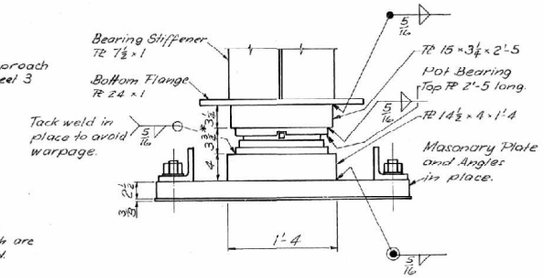

DETAIL OF BEARING INSTALL - EAST END

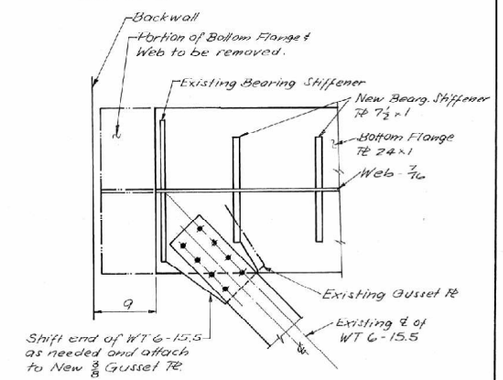

DETAIL OF WIND BRACING MODIFICATION

NO.	BY	DATE	REMARKS

REVISIONS

UTAH DEPARTMENT OF TRANSPORTATION
SALT LAKE CITY, UTAH
STRUCTURES DIVISION

MODIFICATION OF EAST ABUTMENT

DESIGN MW 8-78	CHECK AOB 8-78		719+20
DRAWN Hom PC 8-78	CHECK MW 8-78		STATION
QUANT. Hom PC 8-78	CHECK MW 8-78		DUCHESNE
APPROVAL RECOMM. 8-15-78	A.O. Blomquist, Jr.		COUNTY
APPROVED Aug 15, 1978			DRG. NO. C-560 R-2
			SHT. 2 OF 5

N.F.-15 (6)
PROJECT NUMBER

FOR INFORMATION ONLY

DGN File: IP PwPw8415\595\16485_C-560R2-82 For information only
16485
27-OCT-2020

MARK	LOCATION	SIZE NO.	NO. BARS	LGTH	TOTAL LENGTH	SKETCH A	B	C	D	E	F	G
A 1	ABUTMENT	5	42	4'-0"	168'-0"	1'-6"	1'-0"	1'-6"	10"	1'-4"	8"	6"
A 2		5	42	3'-0"	126'-0"	1'-9"	9"	6"	8"	5"	3"	4"
A 3		5	44	2'-5"	106'-4"	1'-8"	9"	8"	5"			
A 4		5	28	3'-4"	93'-4"	1'-8"	1'-8"	10"	1'-5"			
A 5	ABUTMENT	5	18	21'-3"	382'-6"							
AS 1	APPROACH SLAB	4	44	19'-6"	865'-4"							
AS 2		7	56	19'-6"	1,101'-4"							
AS 3		4	40	20'-6"	820'-0"							
AS 4		4	42	7'-11"	332'-6"							
AS 5		7	3	20'-6"	61'-6"							
AS 6		4	36	4'-0"	144'-0"							
AS 7		4	40	22'-0"	880'-0"							
AS 8	APPROACH SLAB	7	3	22'-0"	66'-0"							
P 1	PARAPET	5	2	7'-5"	14'-10"	3'-4"	9"					
P 2		5	2	7'-7"	15'-2"	3'-5"	10"					
P 3		5	2	7'-9"	15'-6"	3'-6"	11"					
P 4		5	26	7'-10"	203'-8"	3'-6"	1'-0"					
P 5		5	4	7'-7"	30'-4"							
P 6		5	8	17'-10"	142'-8"							
P 7	PARAPET	4	16	17'-11"	285'-4"							

3,327'-2" OF #4 BARS @ 0.668 LBS/FT = 2,222.5 LBS.
1,298'-4" OF #5 BARS @ 1.043 LBS/FT = 1,354.2 LBS.
1,228'-10" OF #7 BARS @ 2.044 LBS/FT = 2,511.7 LBS.

TOTAL 6,088.4 LBS.

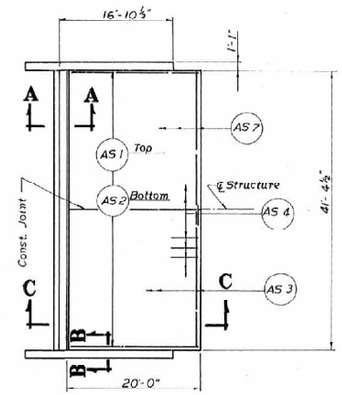

PLAN

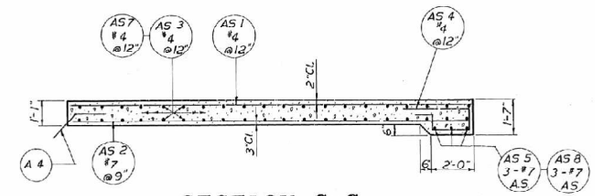

SECTION C-C

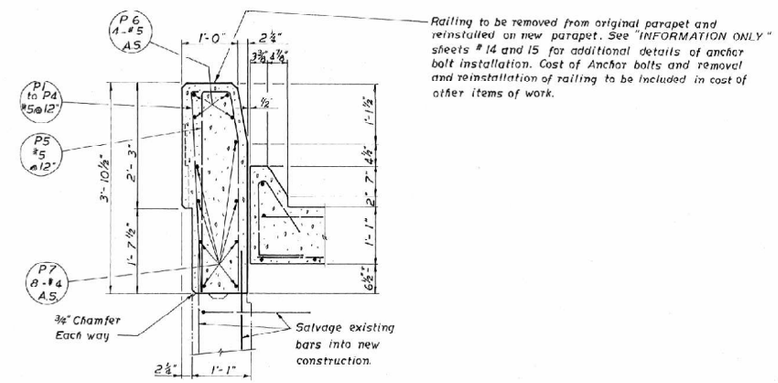

Railing to be removed from original parapet and reinstalled on new parapet. See "INFORMATION ONLY" sheets #14 and 15 for additional details of anchor bolt installation. Cost of Anchor bolts and removal and reinstallation of railing to be included in cost of other items of work.

SECTION B-B

Refer to sheets 14 + 15 of original plans for Details of Parapet and Railing not shown here.

See sheet #5 for details of Expansion Dam and Installation

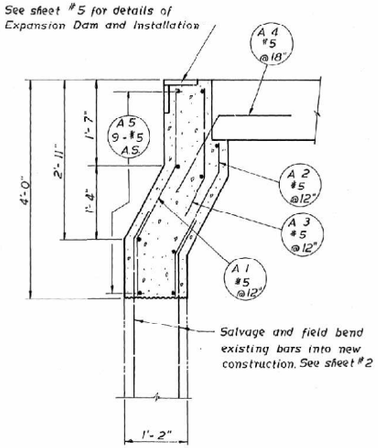

SECTION A-A

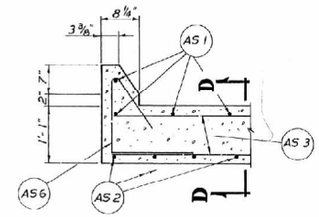

APPROACH SLAB CURB

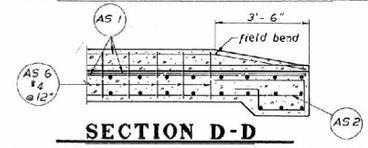

SECTION D-D

NOTE:
Existing Approach Slab, Parapet and portion of Backwall shall be removed and replaced as shown.

CONCRETE QUANTITIES

APPROACH SLAB	35.50	Cu.Yd.
BACKWALL	7.32	Cu.Yd.
PARAPET	5.68	Cu.Yd.
TOTAL	48.50	Cu.Yd.

NO.	BY	DATE	REMARKS

REVISIONS

UTAH DEPARTMENT OF TRANSPORTATION
SALT LAKE CITY, UTAH
STRUCTURES DIVISION
US - 40 RELOCATION
STARVATION RESERVOIR BRIDGE
CONCRETE MODIFICATION EAST ABUTMENT

DESIGN MW 8-78 CHECK AOB 8-78
DRAWN M.U.S. 8-18-78 CHECK MW 8-78
QUANT. M.U.S. 8-18-78 CHECK MW 8-78
APPROVAL RECOMM. 8-15-78 A.O. Blomquist
APPROVED Aug 15, 1978 O. H. Ashdown

719 + 20 STATION
DUCHESNE COUNTY
DRG. NO. C-560 R-2
SHT. 3 OF 5

NF-15 (6)
PROJECT NUMBER

FOR INFORMATION ONLY

27-OCT-2020 16485 DGN File: JP PwPw8415\595\16485_C-560R2-03 For information only

NOTE:
Temporary support of joint outside of exterior beams must be provided until the concrete is poured and cured.

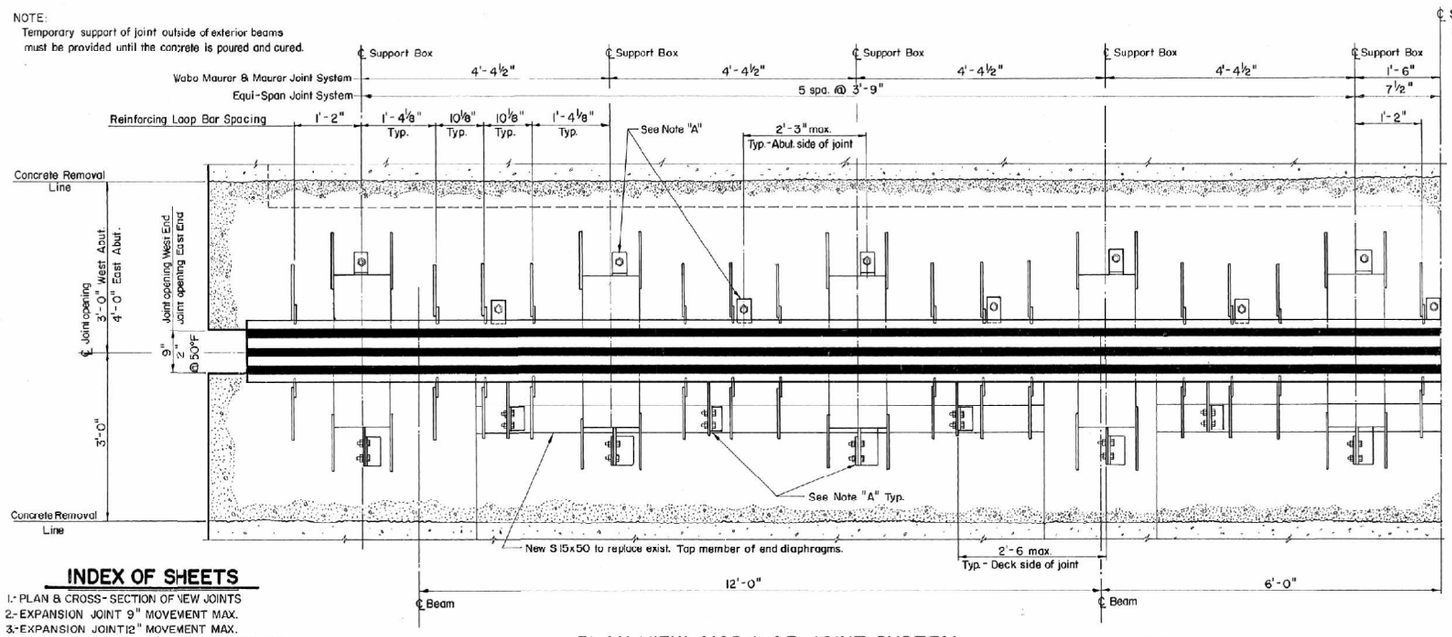

PLAN VIEW MODULAR JOINT SYSTEM
HALF SECTION

NOTE "A":
The joint manufacturer shall supply attachments capable of placing and maintaining joint in correct alignment during placement of deck and abutment concrete. Attachments shown are for representative purposes only. Proposed attachment method details to be indicated on shop drawings submitted for approval. Attachments must be made to either top member of diaphragm or to top of beams on deck side of joints.

GENERAL NOTES

1.- Materials, construction and workmanship shall be in accordance with the Utah Department of Transportation Standard Specification for Road and Bridge Construction, Edition of 1979, and Supplements thereto which are in effect at the date of request for bids.

2.- All reinforcing steel shall be deformed billet steel bars conforming to ASTM designation A-615 Grade 60 and be epoxy coated.

3.- All structural steel shall be structural carbon steel conforming to AASHTO designation M-183 except where noted otherwise.

4.- Exposed concrete corners shall be chamfered ¾" except where noted otherwise.

5.- Cover to reinforcing steel shall be 2" except where noted otherwise.

6.- All cast-in-place concrete shall be Class AA (AE) except where specified otherwise and small contain type III-High Early Strength Cement.

DESIGN DATA

Cast-in-place Concrete: fc = 1400 psi, fs = (Reinf.) = 24,000 psi, n = 8

Structural Steel: fs = 20,000 psi

INDEX OF SHEETS

1.- PLAN & CROSS-SECTION OF NEW JOINTS
2.- EXPANSION JOINT 9" MOVEMENT MAX.
3.- EXPANSION JOINT 12" MOVEMENT MAX.
3a- EQUI-SPAN JOINT SYSTEM 2" MOVEMENT MAX.
4.- REBAR LAYOUT FOR JOINT AREA
5.- WEST END JOINT & ABUTMENT MODIFICATION
6.- EAST END JOINT & ABUTMENT MODIFICATION
7.- DIAPHRAGM AND BEARING UNIT MODIFICATIONS
8.- PARAPET SLIDING PLATES FOR JOINT OPENINGS
9.- PARAPET AND APPROACH SLAB MODIFICATIONS
10.- REINFORCING STEEL SCHEDULE AND PARAPET END MODIFICATION

NOTE "B":
Joint system shown is for 9" max. movement which is to be installed at west end of Starvation Reservoir Bridge. 12" max. movement joint which is to be installed at east end of the same bridge is to have similar details.

Joints are to be set at elevations established by the Engineer to fit normal crown section of roadway with 0.00 % profile grade.

QUANTITIES

ITEM	ESTIMATED	UNIT
Removal of concrete	988	Cu. Ft.
Expansion Joint - 9" max. movement	42	Lin. Ft.
Expansion Joint - 12" max. movement	42	Lin. Ft.
⚠ Structural steel	7,510	Lb.
Modification of beam ends	•	Lump
Lifting of End of Structure	•	Lump
Reinforcing steel - Epoxy coated	5,620	Lb.
Concrete Class AA (AE) - Est. quant. 52 cu. yd.	•	Lump
Polymer concrete	4	Cu. Ft.
Pedestal repair	2	Each

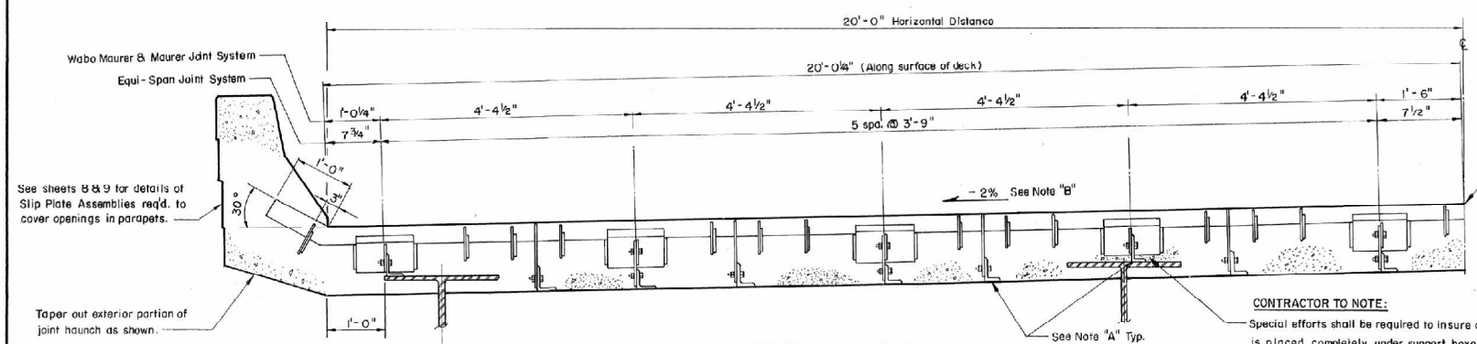

Method of splicing half sections of all components of Joint System used shall be indicated on Shop Drawings with all welding details.

CROSS SECTION
(HALF SECTION)

NOTE:
Gaslines and casing pipe attached to north side of Starvation Reservoir Bridge is property of Koch Hydrocarbon Co. P.O. Box 447 Duchesne, Utah 84201 Represented by Kirk Christensen 548-2216. A Representative should be at the jobsite during period when bridge is being lifted. See location - Sheet #1 of original plan sheets

CONTRACTOR TO NOTE:
Special efforts shall be required to insure concrete is placed completely under support boxes or side frames in these areas.

NO.	BY	DATE	REMARKS
⚠	R.L.R.	4-23-86	Change Quantity

REVISIONS

UTAH DEPARTMENT OF TRANSPORTATION
SALT LAKE CITY, UTAH
STRUCTURES DIVISION

STARVATION RES. BRIDGE JOINT REPAIR

PLAN & CROSS-SECTION OF NEW JOINTS

DESIGN R.L.R. 8-85	CHECK AOB 9-85	719 + 20	
DRAFT M.U.S. 7-85	CHECK R.L.R. 8-85		
QUANT. R.L.R. 7-85	CHECK	STATION	
STRUCTURE RECORDS 9-16-85 DATE	R.L. Fagnuson ENGINEER	DUCHESNE COUNTY	
APPROVED 12-3-85 DATE	H. Hakenderson CHIEF STRUCTURAL ENGR.	DRG. NO. C-560 R-3	
F-015(9) PROJECT NUMBER		SHT. 1 OF 10	

110-899/0634

FOR INFORMATION ONLY

DGN File: IP Pathed8415595\16485_C-560R3-01.for information only.dgn
16485
27-OCT-2020

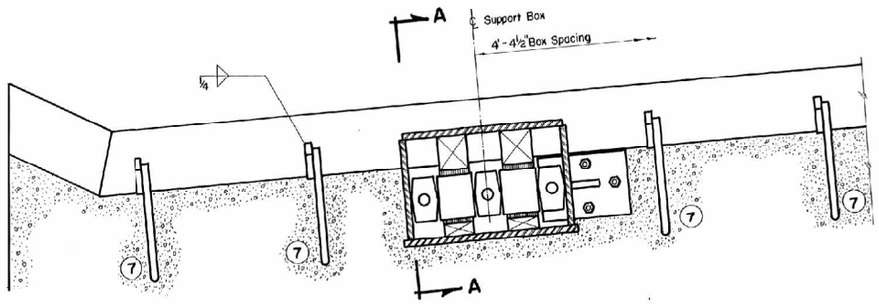

NOTE:
Hear plate not shown in Elevation. For
Anchor Assembly spacing see sheet #1

ELEVATION

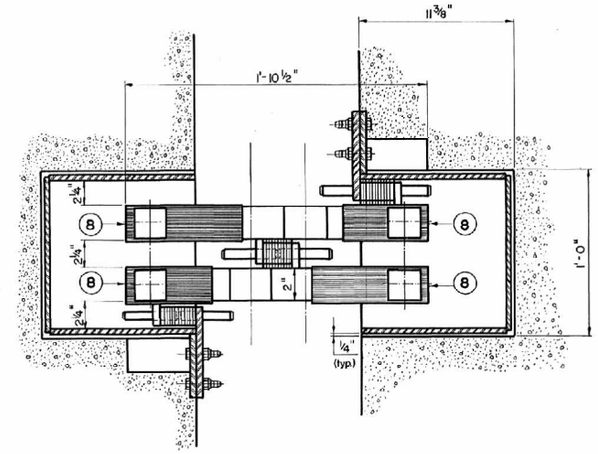

SECTION B-B

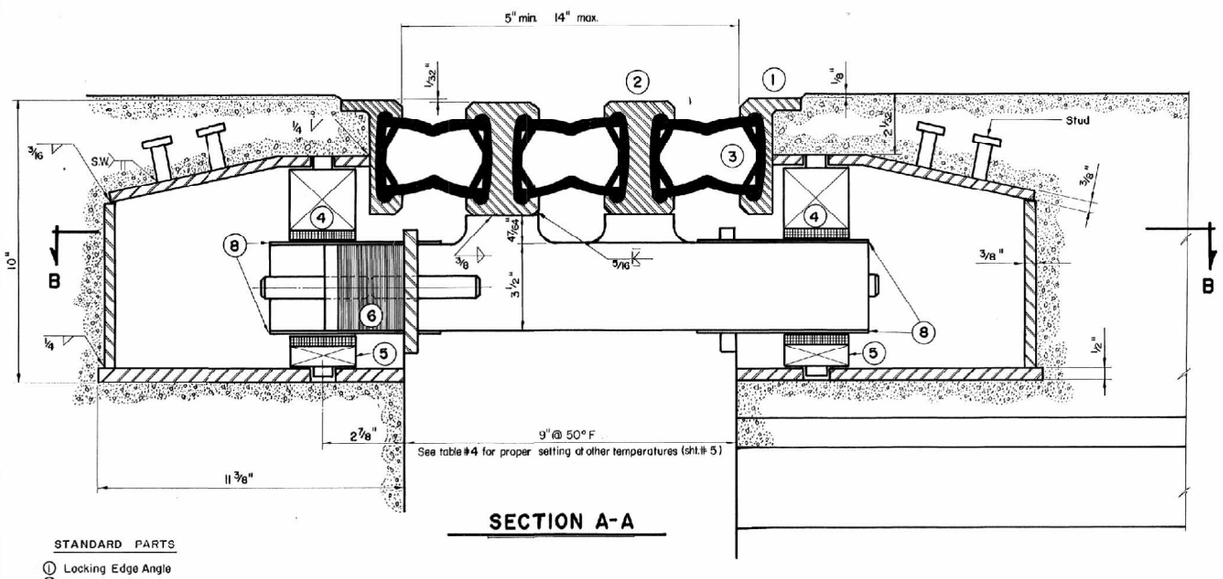

SECTION A-A

STANDARD PARTS

1. Locking Edge Angle
2. Support Beam
3. Neoprene Locking Seal
4. Compression Spring
5. Bearing
6. Control Spring
7. Anchor Assembly
8. Stainless Steel Plate

Details shown are a typical representation for Watson-Bowman Acme Corp's Wabo-Maurer Joint D-900 and for D.S. Browns Co's. Maurer Joint.

All dimensions and weld symbols shown are subject to change depending on the particular joint system used and approval of shop drawings. Equi-Span alternate joint system is shown on sheet # 3a.

NO.	BY	DATE	REMARKS

REVISIONS

UTAH DEPARTMENT OF TRANSPORTATION
SALT LAKE CITY, UTAH
STRUCTURES DIVISION

EXPANSION JOINT 9" MOVEMENT MAX.

DESIGN R.L.R. 6-85	CHECK A.D.B. 7-85	719 + 20	
DRAWN M.U.S. 6-85	CHECK R.L.R. 9-85		
QUANT.	CHECK	STATION	
REVISED 9-6-85 DATE	R.L. Rasmussen PROJ. ENGR.	DUCHESNE COUNTY	
APPROVED 12-3-85 DATE	R.L. Henderson STRUCTURES ENGR.	DRG. NO. C-560R-3	
F-015(9) PROJECT NUMBER		SHT. 2 OF 10	

FOR INFORMATION ONLY

DGN File: JP PwPod84\95\16485_C-560R3-82 For information only
16485
27-OCT-2020

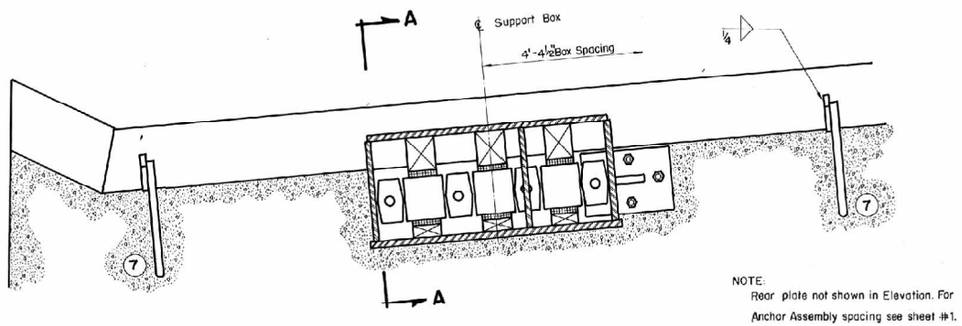

NOTE:
Rear plate not shown in Elevation. For Anchor Assembly spacing see sheet #1.

ELEVATION

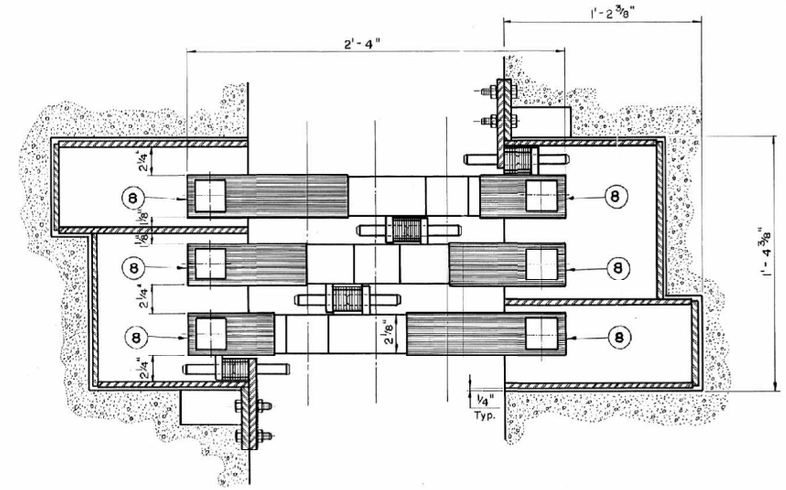

SECTION B-B

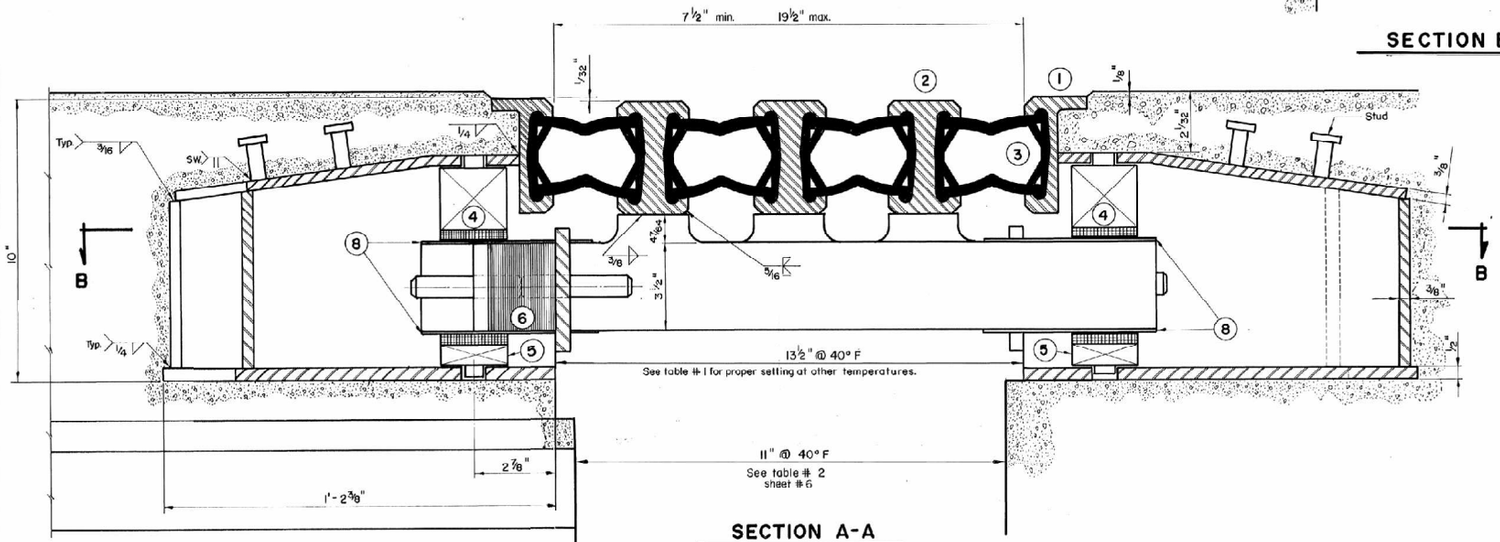

SECTION A-A

TABLE NO. 1 EAST ABUTMENT			
REQ'D. JOINT OPENING AT VARIOUS TEMP. °F			
TEMP. °F	OPEN INCH	TEMP. °F	OPEN INCH
- 30°	17.88	+ 45°	13.18
- 25°	17.66	+ 50°	12.86
- 20°	17.34	+ 55°	12.54
- 15°	17.02	+ 60°	12.22
- 10°	16.70	+ 65°	11.90
- 5°	16.38	+ 70°	11.58
0°	16.06	+ 75°	11.26
+ 5°	15.74	+ 80°	10.94
+ 10°	15.42	+ 85°	10.62
+ 15°	15.10	+ 90°	10.30
+ 20°	14.78	+ 95°	9.98
+ 25°	14.46	+ 100°	9.66
+ 30°	14.14	+ 105°	9.34
+ 35°	13.82	+ 110°	9.02
+ 40°	13.50		

STANDARD PARTS

1. Locking Edge Angle
2. Support Beam
3. Neoprene Locking Seal
4. Compression Spring
5. Bearing
6. Control Spring
7. Anchor Assembly
8. Stainless Steel Plate

Details shown are a typical representation for Watson-Bowman Acme Corp's Wabo-Maurer Joint D-900 and for D.S. Browns Co's. Maurer Joint.

All dimensions and weld symbols shown are subject to change depending on the particular joint system used and approval of shop drawings. Equi-Span alternate joint system is shown on sheet # 3a.

NO.	BY	DATE	REMARKS

REVISIONS

UTAH DEPARTMENT OF TRANSPORTATION
SALT LAKE CITY, UTAH
STRUCTURES DIVISION

EXPANSION JOINT 12" MOVEMENT MAX.

DESIGN R.L.R. 7-85 CHECK ADB 7-85
DRAWN M.U.S. 7-85 CHECK R.L.R. 8-85
QUANT. CHECK
APPROVED RECOMM. 9-6-85 DATE R.P. Rasmussen GROUP LEADER
APPROVED 12-3-85 DATE D.L. Christensen STRUCT. ENGR. ADM. ENGR.

719+20
STATION
DUCHESNE COUNTY
DRG. NO. C-560 R-3
SHT. 3 OF 10

F-015(9)
PROJECT NUMBER

FOR INFORMATION ONLY

DGN File: JP PwPw84195\95\16485_C-560R3-83 For information only
16485
27-OCT-2020

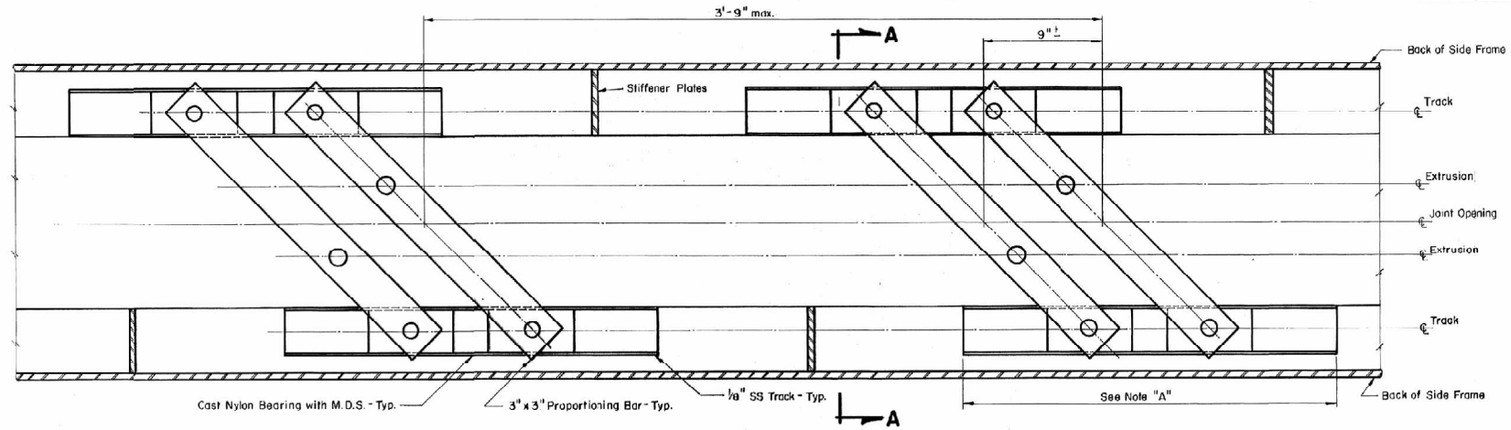

Note "A"

Stainless Steel Track shall be of sufficient length that at no time (from complete close to max. opening) does any portion of cast nylon bearing extend beyond track.

PROPORTIONING BAR PLAN DETAIL

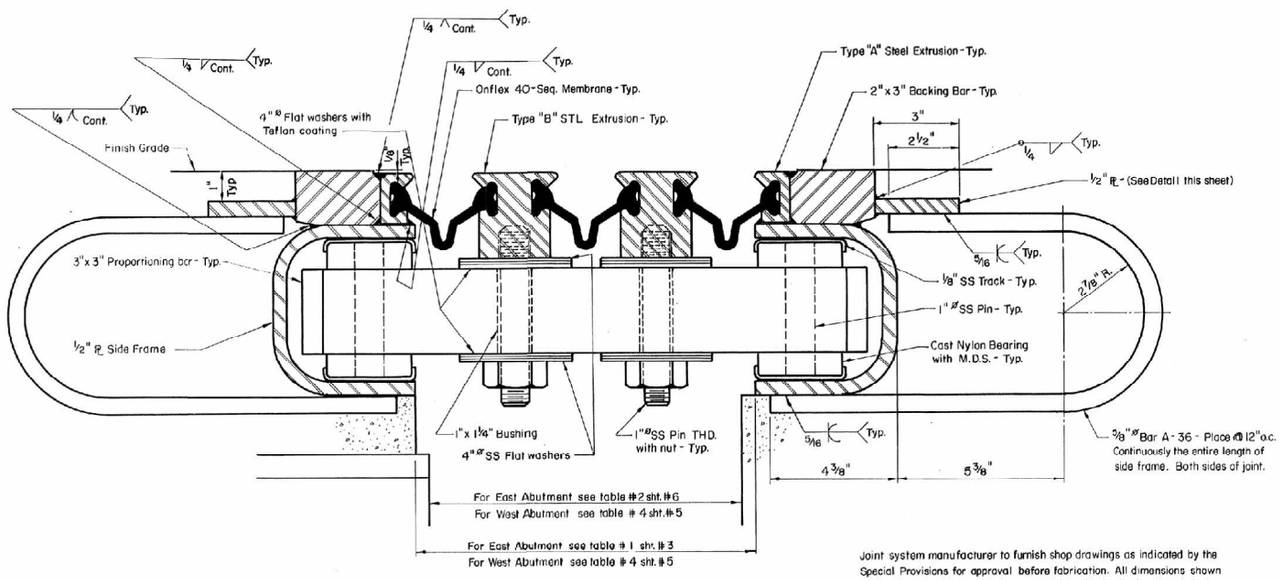

SECTION A-A

MAXIMUM MOVEMENT CAPACITY = 12"

TO BE USED AT BOTH EAST AND WEST ABUTMENTS

Joint system manufacturer to furnish shop drawings as indicated by the Special Provisions for approval before fabrication. All dimensions shown on the shop drawings must be compatable with the backwall and deck modification shown by Drawing No. C-560 R-3.

Completely fabricated and assembled, half width joints systems are to be furnished to the job site. Joint assemblies are to be furnished with an approved system for adjusting the joint opening to that required for the temperature at the time of setting.

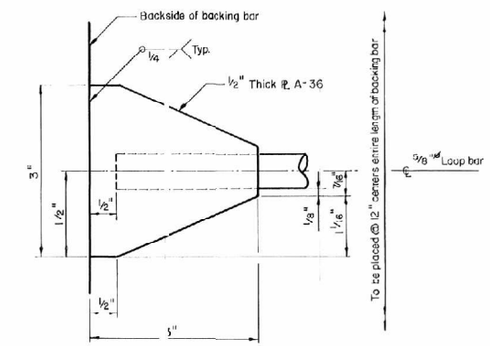

TYPICAL ATTACHMENT PLATE FOR LOOP BAR

NO	BY	DATE	REMARKS

REVISIONS

UTAH DEPARTMENT OF TRANSPORTATION
SALT LAKE CITY, UTAH
STRUCTURES DIVISION

EQUI - SPAN JOINT SYSTEM
12" MOVEMENT MAX.

DESIGN R.L.R. 1-86	CHECK AOB 1/86		719+20
DRAWN M.U.S. 1-86	CHECK R.L.R. 1-86		
CLIENT	CHECK		DUCHESNE
RECOMMENDED 1-14-86 DATE			DRG. NO. C-560R-3
APPROVED 1-17-86 DATE	STATE BRIDGE ENGINEER		SHT 3a OF 10
F-015(9) PROJECT NUMBER			

FOR INFORMATION ONLY

27-OCT-2020 16485 DGN File: JP PwPad84\95\95\16485_C-560R3-03a for information only.dgn

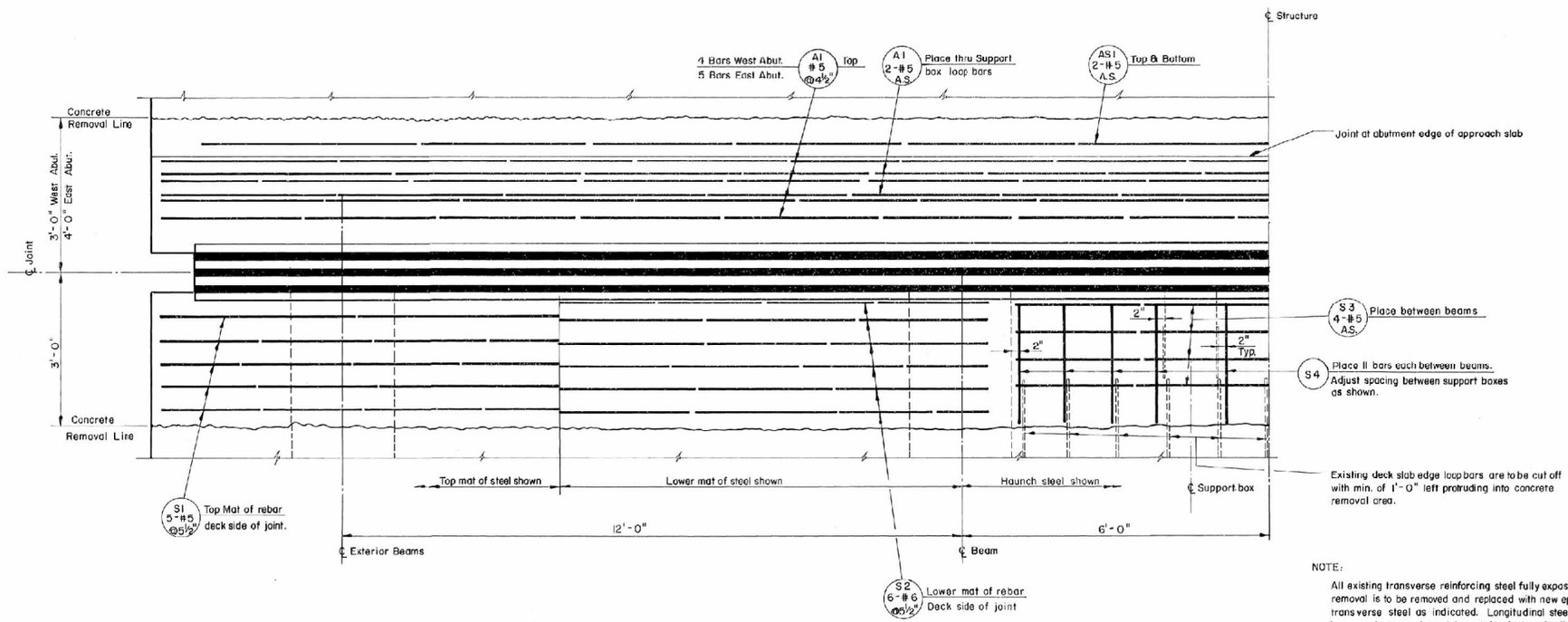

LAYOUT FOR REBAR

West Abutment shown - East Abutment similar

NOTE:

All existing transverse reinforcing steel fully exposed by concrete removal is to be removed and replaced with new epoxy coated transverse steel as indicated. Longitudinal steel exposed by concrete removal must be retained. Longitudinal steel is to be cleaned by sandblasting and bent as necessary to fit around new joint hardware. Minor adjustments in lengths may be permitted by the engineer.

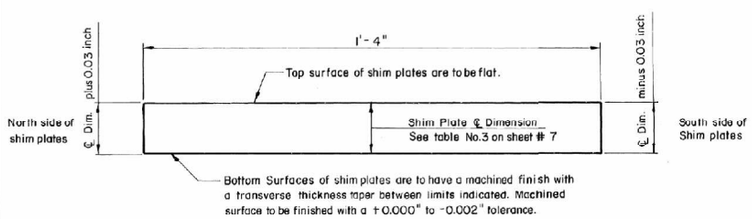

SHIM PLATE DETAIL

CROSS-SECTIONAL VIEW

NO	BY	DATE	REMARKS

REVISIONS

UTAH DEPARTMENT OF TRANSPORTATION
SALT LAKE CITY, UTAH
STRUCTURES DIVISION

REBAR LAYOUT FOR JOINT AREA

DESIGN R.L.R. 7-85	CHECK ADS 9-85			719 + 20
DRAWN M.U.S. 7-85	CHECK R.L.R. 9-85			STATION
QUANT R.L.R. 7-85	CHECK			DUCHESNE COUNTY
RECOMM. RECORD 9-6-85 DATE	R.L. Rasmussen DIV. ENGINEER			DRG. NO.
APPROVED 12-3-85 DATE	A.L. Christensen STRUCT. ENGINEER			C-560R-3
F-015(9) PROJECT NUMBER				SHT. 4 OF 10

FOR INFORMATION ONLY

DGN File: IP PwPod84\9595\16485_C-560R3-84 For information only.dgn
16485
27-OCT-2020

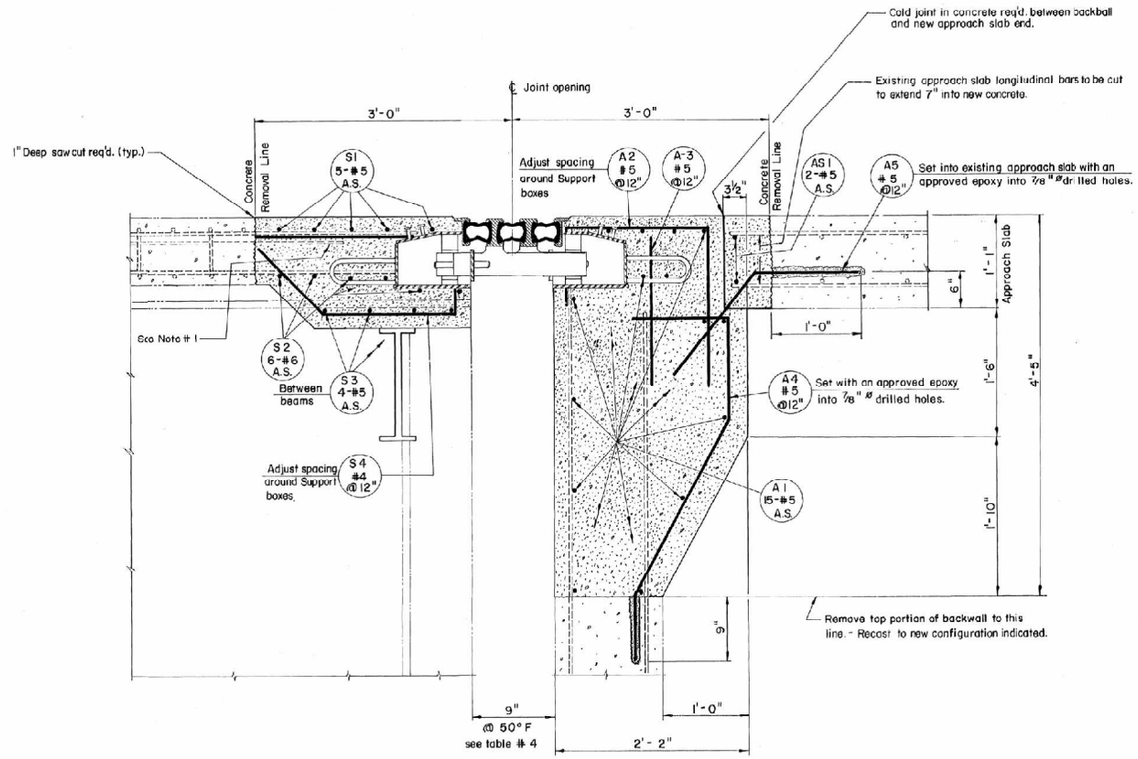

JOINT DETAIL AT WEST ABUTMENT

NOTE

1.- Top member of existing deck slab loop bars are to be cut such that a min. length of 12" protrudes into the new deck joint area. Protruding length to be used as splice for new loop bars. (Bar # S4)

TABLE NO. 4 - WEST ABUTMENT REQ'D. JOINT OPENING AT VARIOUS TEMP. ° F					
TEMP. °F	OPEN INCH	TEMP. °F	OPEN INCH	TEMP. °F	OPEN INCH
- 30°	14.12	+ 20°	10.92	+ 70°	7.72
- 25°	13.80	+ 25°	10.60	+ 75°	7.40
- 20°	13.48	+ 30°	10.28	+ 80°	7.08
- 15°	13.16	+ 35°	9.96	+ 85°	6.76
- 10°	12.84	+ 40°	9.64	+ 90°	6.44
- 5°	12.52	+ 45°	9.32	+ 95°	6.12
0°	12.20	+ 50°	9.00	+ 100°	5.80
+ 5°	11.88	+ 55°	8.68	+ 105°	5.48
+ 10°	11.56	+ 60°	8.36	+ 110°	5.16
+ 15°	11.24	+ 65°	8.04		

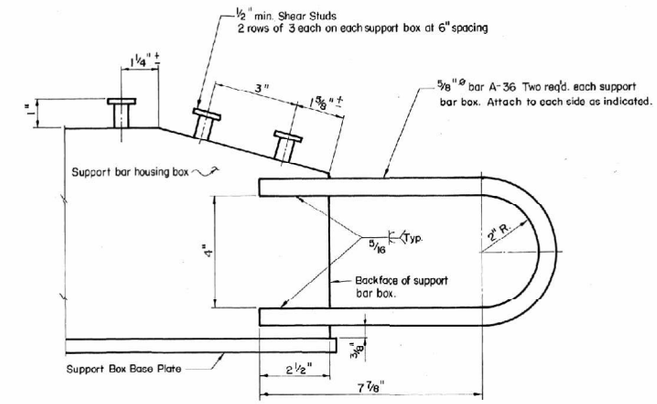

TYPICAL LOOP & STUD ATTACHMENT TO SUPPORT BAR BOXES

Watson - Bowman Acme, and D.S. Brown Joint Systems

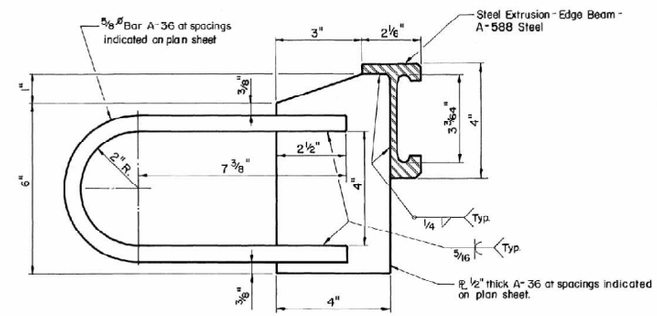

TYPICAL LOOP ATTACHMENT TO JOINT EDGE BEAM

Watson - Bowman Acme and D.S. Brown Joint Systems

UTAH DEPARTMENT OF TRANSPORTATION
SALT LAKE CITY, UTAH
STRUCTURES DIVISION

WEST END
JOINT & ABUTMENT MODIFICATION

DESIGN R.L.R. 7-85	CHECK ABB 9-85	719+20	
DRAWN M.U.S. 7-85	CHECK R.L.R. 8-85		
QUANT R.L.R. 7-85	CHECK	STATION	
APPROVAL RECOMM 9-6-85	DIVISION ENGINEER R.R. Kemmerer	DUCHESNE	COUNTY
APPROVED 12-3-85	DIRECTOR UTAH DEPT. OF TRANSPORTATION U.A. Schulzmann	DRG. NO. C-560R-3	
F-015 (9)		SHT. 5 OF 10	
PROJECT NUMBER			

NO.	BY	DATE	REMARKS

REVISIONS

FOR INFORMATION ONLY

DGN File: IP PwPub84\9595\16485_C-560R3-85. For information only.
16485
27-OCT-2020

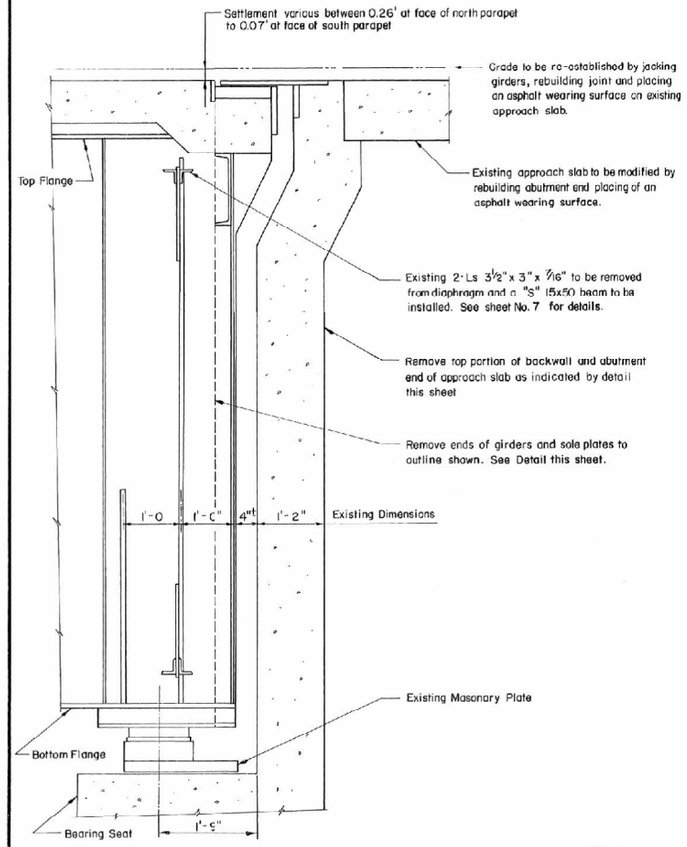

SECTIONAL ELEVATION AT EAST ABUTMENT

Showing present positions of girders and backwall and preparations needed to free and raise the girders.

NOTES

1.- New 7½" x 1" x 4'-0" plate stiffeners are to be placed directly above jacking position used to lift beams. Dimension indicated is approximate only.

2.- Top member of existing deck slab loop bars to be cut such that a min. length of 12" protrudes into the new deck joint area. Protruding length to be used as splice for new loop bars (S4 bar).

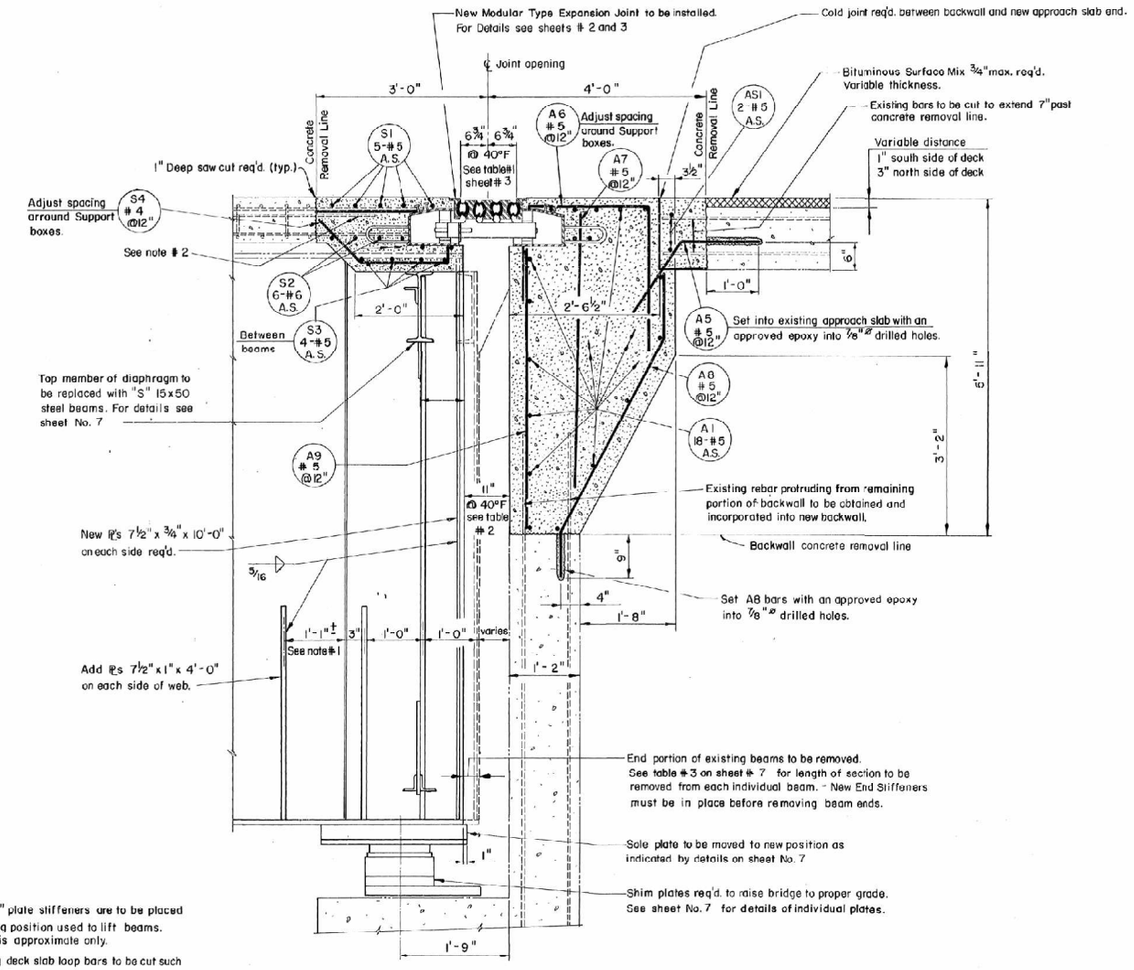

JOINT DETAIL AT EAST ABUTMENT

TABLE NO. 2 - EAST ABUTMENT

OPENING BETWEEN BACKWALL AND BEAM ENDS

TEMP. °F	OPEN INCH	TEMP. °F.	OPEN INCH	TEMP. °F	OPEN INCH	TEMP. °F	OPEN INCH	TEMP. °F	OPEN INCH	TEMP. °F	OPEN INCH	TEMP. °F	OPEN INCH
- 30°	15.48	- 10°	14.20	+ 10°	12.92	+ 30°	11.64	+ 50°	10.36	+ 70°	9.08	+ 90°	7.80
- 25°	15.16	- 5°	13.88	+ 15°	12.60	+ 35°	11.32	+ 55°	10.04	+ 75°	8.76	+ 95°	7.48
- 20°	14.84	0°	13.56	+ 20°	12.28	+ 40°	11.00	+ 60°	9.72	+ 80°	8.44	+ 100°	7.16
- 15°	14.52	+ 5°	13.24	+ 25°	11.96	+ 45°	10.68	+ 65°	9.40	+ 85°	8.12	+ 105°	6.84

NO.	BY	DATE	REMARKS

REVISIONS

UTAH DEPARTMENT OF TRANSPORTATION
SALT LAKE CITY, UTAH
STRUCTURES DIVISION

EAST END
JOINT & ABUTMENT MODIFICATION

DESIGN R.L.R. 7-85 CHECK AOB 9-85
DRAWN M.U.S. 7-85 CHECK R.L.R. 8-85
CHECK R.L.R. 7-85 CHECK
REVIEWED 9-6-85 R.J. Rasmussen
APPROVED 12-3-85 J.A. Gedrimas

719 + 20
STATION
DUCHESNE
COUNTY
DRG. NO.
C-560R-3
SHT. 6 OF 10

F-015 (9)
PROJECT NUMBER

FOR INFORMATION ONLY

DGN File: IP PwPw8415595\16485_C-560R3-86. For information only
16485
27-OCT-2020

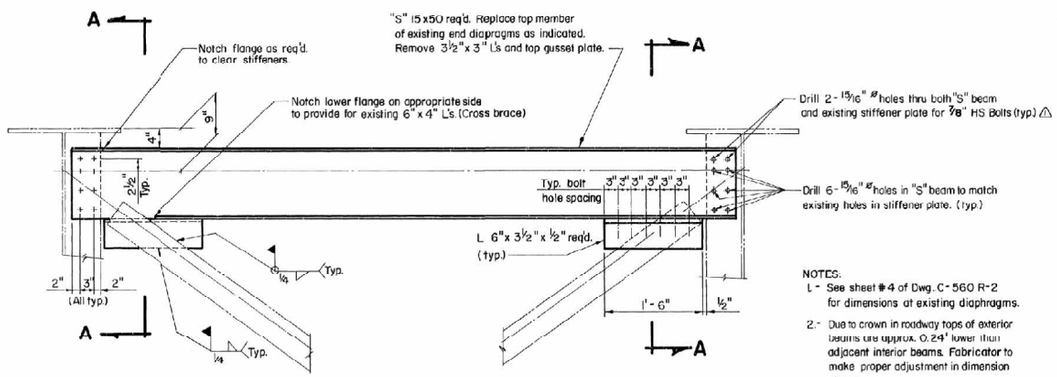

NOTES:

1.- See sheet #4 of Dwg. C-560 R-2 for dimensions at existing diaphragms.

2.- Due to crown in roadway tops of exterior beams are approx. 0.24' lower than adjacent interior beams. Fabricator to make proper adjustment in dimension shown.

TYPICAL MODIFICATIONS OF END DIAPHRAGMS EAST ABUTMENT

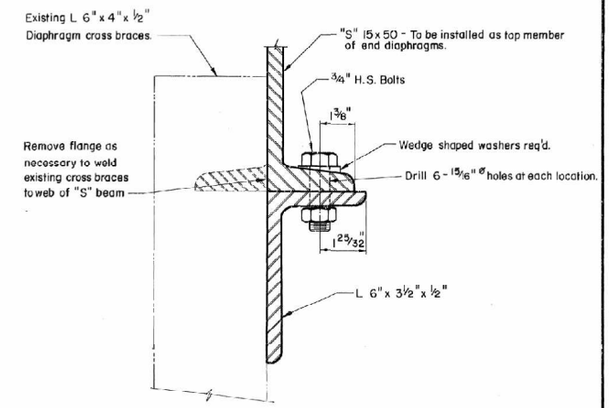

SECTION A-A

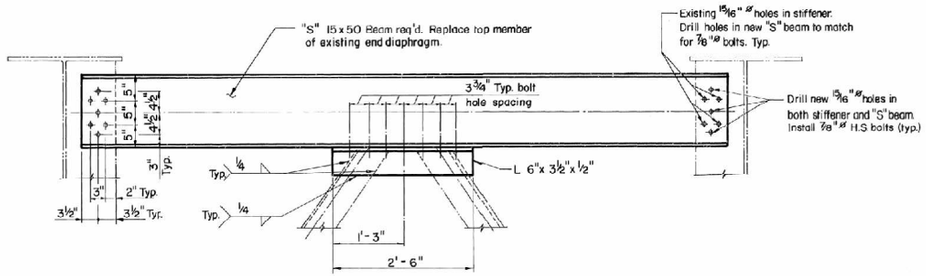

TYPICAL MODIFICATIONS OF END DIAPHRAGMS WEST ABUTMENT

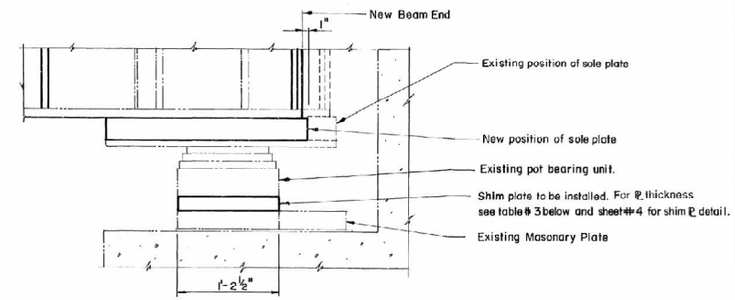

ELEVATION OF BEARING MODIFICATIONS

EAST ABUTMENT

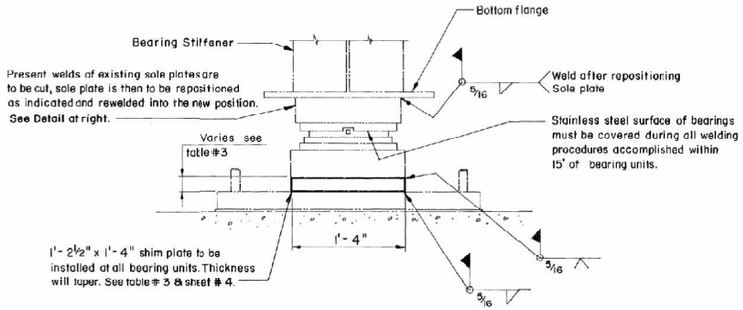

DETAIL OF BEARING UNIT MODIFICATIONS

EAST ABUTMENT

TABLE NO. 3
EAST ABUTMENT
LENGTH TO BE REMOVED FROM BEAMS AND SHIM PLATE THICKNESSES

Beam No. starting with South exterior beam	Length to be removed inches	Shim plate Centerline thickness inches
1	4½"	1.80
2	4"	2.40
3	5"	3.00
4	4"	3.60

NO.	BY	DATE	REMARKS
△1	M.U.S.	3-86	Change bolt size

REVISIONS

UTAH DEPARTMENT OF TRANSPORTATION
SALT LAKE CITY, UTAH
STRUCTURES DIVISION

DIAPHRAGM AND BEARING UNIT MODIFICATIONS

DESIGN R.L.R. 7-85	CHECK ADB 7-85		719+20
DRAWN M.U.S. 7-85	CHECK R.L.R. 8-85		
QUANT. R.L.R. 7-85	CHECK		MATION
REVISIONS 9-6-85 DATE	R.J. Kasmusen DESIGN ENGINEER		DUCHESNE COUNTY
APPROVED 12-3-85 DATE	R.J. Kasmusen ASSIST. DIRECTOR-STRUCTURES DIVISION		DRG. NO. C-560R-3
F-015 (9) PROJECT NUMBER			SHT 7 OF 10

FOR INFORMATION ONLY

27-OCT-2020 16485 DGN File: JP PwPw8845959\16485_C-560R3-07 For information only

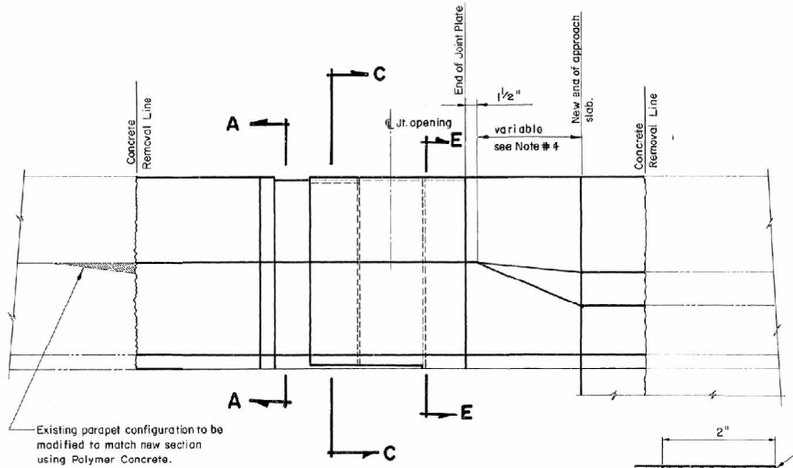

PARAPET JOINT ELEVATION

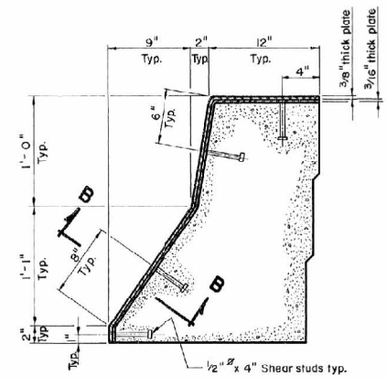

SECTION A-A

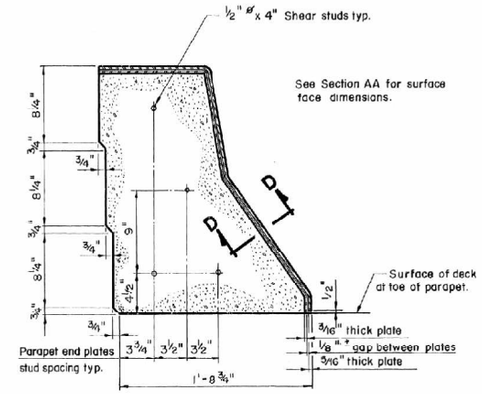

SECTION C-C

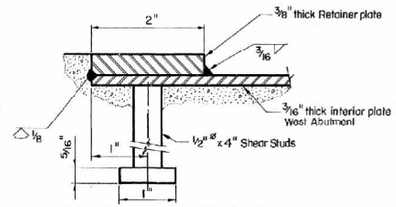

PARTIAL SECTION B-B

Face, back and shear stud configuration dimensions shall be the same as indicated by Sections A-A & B-B.

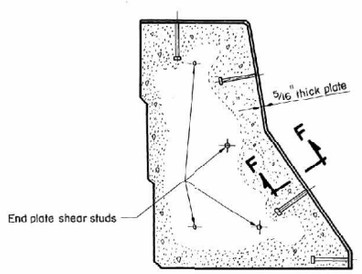

SECTION E-E

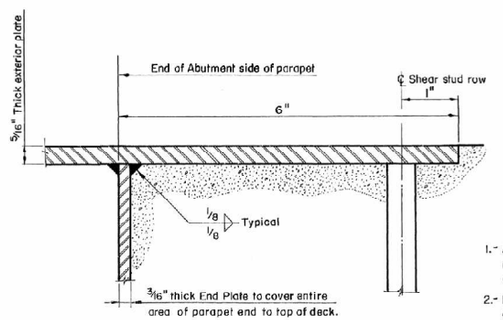

PARTIAL SECTION F-F

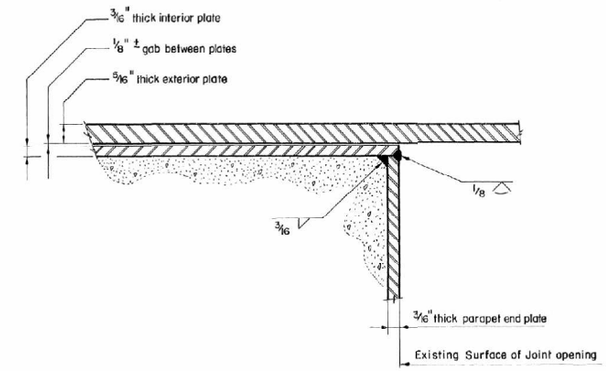

PARTIAL SECTION D-D

NOTES

1.- All steel used to fabricate joint slip plates shall conform to requirements of ASTM A-36 and shall be hot dipped galvanized after fabrication in accordance with ASTM A-123.

2.- Parapet slip joint steel plate details shown are for South West and North East locations. Materials req'd. for South East North West locations shall be opposite hand.

3.- Changes in direction of steel plates may be made by bending or by full penetration welds. Max. radius of outside plate surface to be ¾".

4.- Configuration of face of parapet to be modified from standard shape to that existing on wingwall parapets in distance indicated.

SEE SHEET # 9 FOR ADDITIONAL SLIDING PLATE DETAILS

NO.	BY	DATE	REMARKS

REVISIONS

UTAH DEPARTMENT OF TRANSPORTATION
SALT LAKE CITY, UTAH
STRUCTURES DIVISION

PARAPET SLIDING PLATES FOR JOINT OPENINGS

DESIGN R.L.R. 7-85	CHECK A.D.B. 9-85	719+20	
DRAWN M.U.S. 7-85	CHECK R.L.R. 8-85	STATION	
QUANT. R.L.R. 7-85	CHECK	DUCHESNE	COUNTY
APPROVAL RECOMM. 9-16-85 DATE	R.S.P. STRUCTURES ENGINEER	DRG. NO.	
APPROVED 12-3-85 DATE	N.J.C. Anderson NEW STRUCTURES ENGINEER	C-560R-3	
F-015(9) PROJECT NUMBER		SHT. 8 OF 10	

FOR INFORMATION ONLY

27-OCT-2020 16485 DGN File: JP PaPed8415955\16485_C-560R3-88 For information only

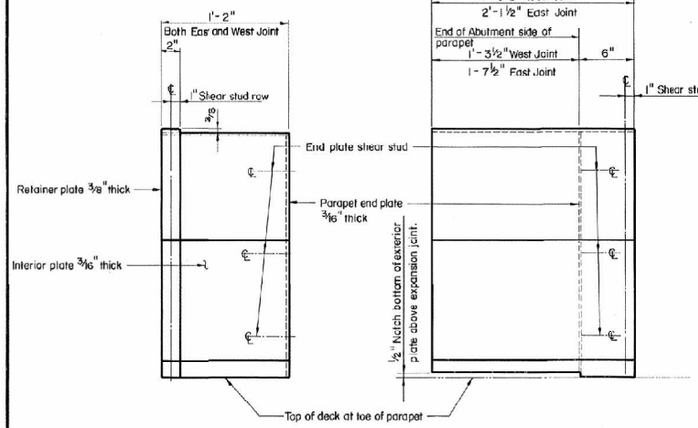

PARAPET JOINT INTERIOR SLIP PLATE

4 REQUIRED

(To be installed on deck portion of joint at all locations.)

PARAPET JOINT EXTERIOR SLIP PLATE

2 REQUIRED EACH SIZE

(To be installed on abutment side of joint at all locations.)

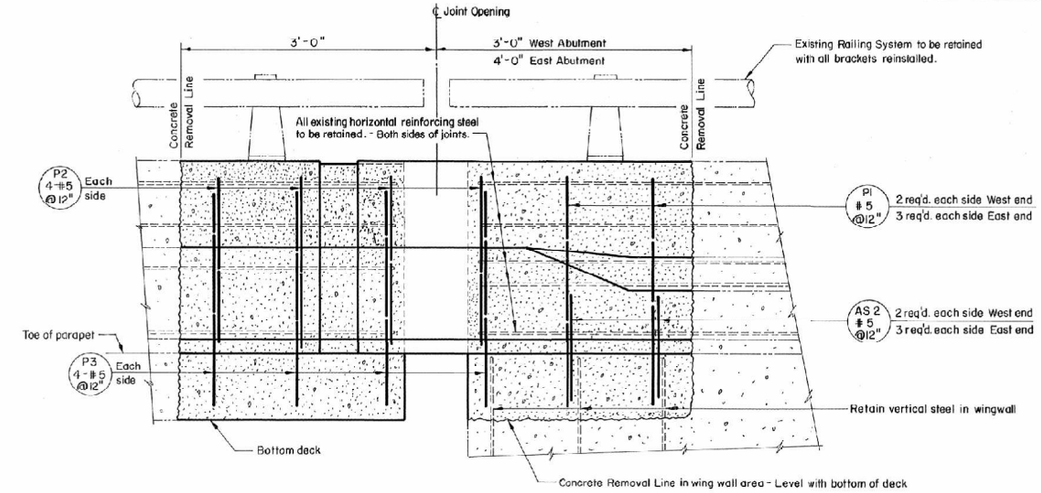

PARAPET ELEVATION AT JOINTS

(Showing concrete removal area and rebar replacement)

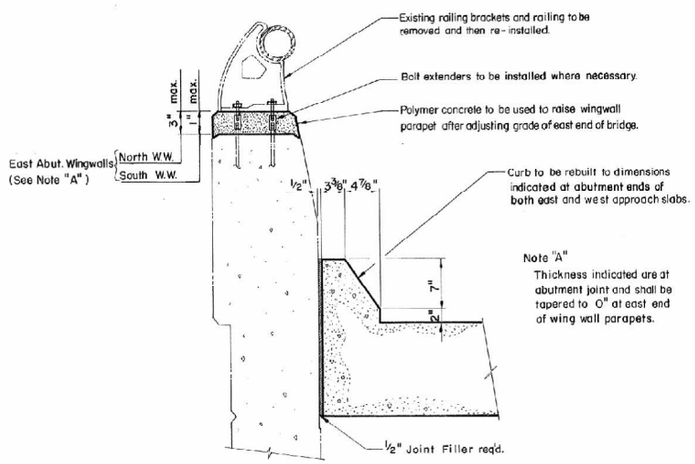

PARAPET AND APPROACH SLAB MODIFICATIONS REQ'D.

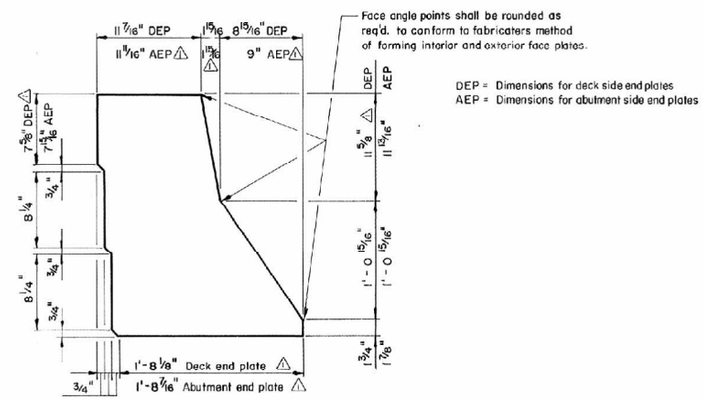

PARAPET END PLATE CONFIGURATION DETAIL

4 REQ'D. EACH SIZE

NO.	BY	DATE	REMARKS
1	M.U.S.	6-26-86	CHANGED PLATE

REVISIONS

UTAH DEPARTMENT OF TRANSPORTATION
SALT LAKE CITY, UTAH
STRUCTURES DIVISION

PARAPET AND APPROACH SLAB MODIFICATION

DESIGN R.L.R. 7-85	CHECK ADB 7-85		719+20
DRAWN M.U.S. 8-85	CHECK R.L.R. 8-85		STATION
QUANT R.L.R. 7-85	CHECK		DUCHESNE
APPROVAL RECOMM. 9-6-85 DATE	KJ Gunnison DESIGN ENGINEER		COUNTY
APPROVED 12-3-85 DATE	H.K. Christensen STRUCTURES DIR.		DRG. NO. C-560R-3
F-015(9) PROJECT NUMBER			SHT. 9 OF 10

FOR INFORMATION ONLY

DGN File: JP PwPad84\595\16485_C-560R3-89 For information only.dgn
16485
27-OCT-2020

MARK	LOCATION	SIZE NO.	NO. BARS	LGTH	TOTAL LENGTH	SKETCH
A 1	Backwall-both	5	33	43'-4"	1,430'-0"	2'-2" Splice 4'-2"
A-2	Backwall - WA	5	42	6'-6"	273'-0"	1'-7" 2'-6" 2'-5"
A3	Backwall - WA	5	42	2'-6"	105'-0"	2'-6"
A4	Backwall - WA	5	42	4'-6"	189'-0"	1'-2" 2'-6" 1'-2" 9" 1"
A5	Backwall - both	5	84	3'-0"	252'-0"	1'-6" 1'-6" 125°
A6	Backwall - EA	5	42	7'-4"	308'-0"	2'-3" 2'-6" 2'-7"
A7	Backwall - EA	5	42	5'-0"	210'-0"	5'-0"
A8	Backwall - EA	5	42	7'-0"	294'-0"	1'-2" 4'-0" 1'-10" 9" 1"
A9	Backwall - EA	5	42	5'-0"	210'-0"	5'-0"
P1	Parapet - both	5	12	6'-5"	77'-0"	A 9" B 2'-10" C 2" D 2" E 1'-0" F 1'-10"
P2	Parapet - both	5	16	6'-5	102'-8"	A 9" B 2'-10" C 3" D 2" E 2'-10" F 0"
P3	Parapet - both	5	16	3'-10"	61'-4"	2'-10" 1'-0" 10"

MARK	LOCATION	SIZE NO.	NO. BARS	LGTH	TOTAL LENGTH	SKETCH
S1	Deck Slab - both	5	10	45'-2"	451'-8"	2'-2" Splice 43'-0"
S2	Deck Slab - both	6	10	45'-2"	451'-8"	2'-2" Splice 43'-0"
S3	Slab Haunch - both	5	24	11'-8"	280'-0"	11'-8"
S4	Slab Haunch - both	4	72	6'-0"	432'-0"	2'-5" 9" 11" 1'-1" 1'-7"
AS1	Appr. Slab - both	5	4	41'-10"	167'-4"	2'-2" Splice 39'-8"
AS2	Appr. Slab - both	5	12	4'-0"	48'-0"	2'-1" 1'-4" 1'-0" 1'-6"

NOTE:
All dimensions are out to out unless otherwise specified.

432'-0" of # 4 Bars @ .668 #/ft = 288.58 lbs.
4,457'-0" of # 5 Bars @ 1.043 #/ft = 4648.65 lbs.
461'-8" of # 6 Bars @ 1.502 #/ft = 678.40 lbs.
Total 5,615.63 lbs.

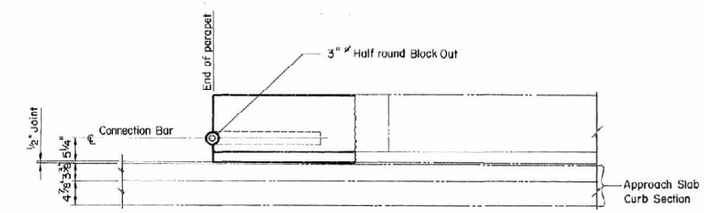

PLAN

Note: Cost of furnishing and installing connection bars to be included in Unit bid price for Concrete Class AA (AE). No separate payment shall be made.

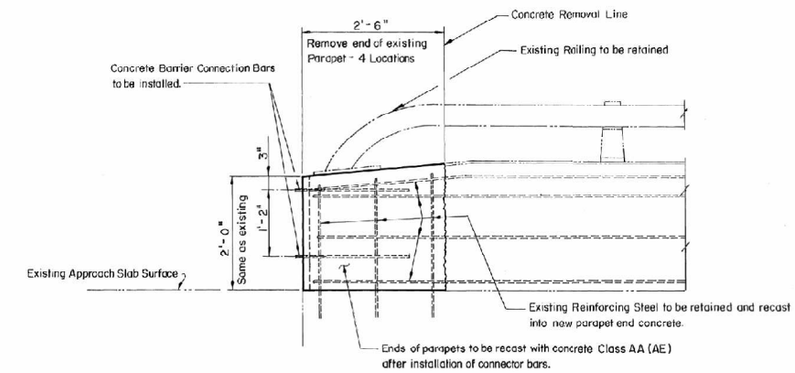

ELEVATION

TYPICAL PARAPET END MODIFICATION

(4 - LOCATIONS)

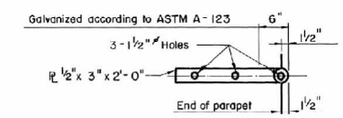

Steel to be ASTM A-36 or ASTM A-575 Grade 1020

CONNECTION BAR DETAIL

NO.	BY	DATE	REMARKS

REVISIONS

UTAH DEPARTMENT OF TRANSPORTATION
SALT LAKE CITY, UTAH
STRUCTURES DIVISION

REINFORCING STEEL SCHEDULE AND PARAPET END MODIFICATION

DESIGN R.L.R. 7-85 CHECK JOB 9-85
DRAWN M.U.S. 8-85 CHECK R.L.R. 8-85
QUANT. R.L.R. 7-85 CHECK
SPECIAL PROVISIONS 9-9-85 DATE
APPROVED 12-3-85 DATE

719+20
STATION
DUCHESNE
COUNTY
DRG. NO. C-560 R-3
SHT. 10 OF 10

F-015 (9)
PROJECT NUMBER

FOR INFORMATION ONLY

DGN File: JP PwPad84\9595\16485_C-560R3-10 for information only.dgn
16485
27-OCT-2020

CATHODIC PROTECTION SUMMARY

DESCRIPTION	BID ALTERNATE #A Flexible conductive Polymer Anode Sys.		BID ALTERNATE #B Titanium Ribbon Anode System		REMARKS
	UNIT	QUANTITY	UNIT	QUANTITY	
Anode Leads # 6	Lin.Ft.	9,800	Lin.Ft.	10,500	See Dwg. No. CP-3 for Details
Anode Leads # 8	Lin.Ft.	4,300	Lin.Ft.	5,400	"
System Negative Leads # 6	Lin.Ft.	8,700	Lin.Ft.	8,700	"
System Negative Leads # 8	Lin.Ft.	3,300	Lin.Ft.	3,300	"
Refer. Cell Wire (#18 twisted pair)	Lin.Ft.	22,600	Lin.Ft.	23,500	"
Rebar Probe Wire (#18 twisted pair)	Lin.Ft.	4,500	Lin.Ft.	4,500	"
Rectifier	Each	1	Each	1	"
Reference Cell (Ag/Ag Cl) w/50' Wire	Each	24	Each	24	"
Rebar Probe with 50' Wire	Each	6	Each	6	"
System Negative and monitor ground (weld end wire)	Each	24	Each	24	"
Flexible Conductive Polymer Strand anode	Lin.Ft.	217,000	-	-	"
Conduit	Lin.Ft.	6,600	Lin.Ft.	6,600	"
Junction Box	Each	72	Each	84	"
Titanium Ribbon anode	-	-	Lin.Ft.	73,200	"
Titanium Distributor Bar	-	-	Lin.Ft.	1,400	"

BRIDGE DECK REHABILITATION SUMMARY

DESCRIPTION	UNIT	QUANTITY	REMARKS
Concrete Removal Class I	Sq.Yd.	7,460	Include entire Deck Surface.
Concrete Removal Class II	Sq.Yd.	7,460	Include entire Deck Surface.
Reinforcing Steel (epoxy coated)	Lb.	1,100	Approach Slab Steel
Concrete Debris Clean Up	Lump	•	
Reinforcing Steel	Lb.	2,500	Use as needed for rebar replacement. △1
Blow Through Forming	Sq.Ft.	600	See Special Provision for usage
Bridge Deck Concrete	Cu.Yd.	1,040	
Concrete Parapet Sealant	Lin.Ft.	3,350	
Rail Splice Repair	Each	4	

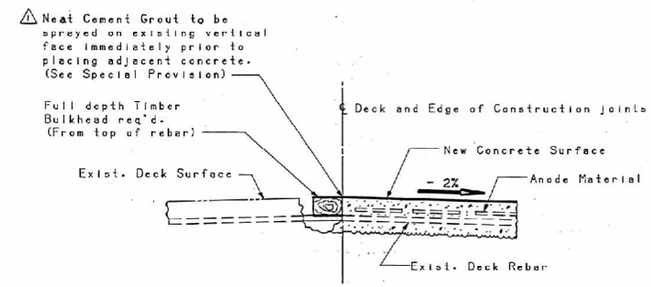

TYPICAL EDGE TREATMENT

(REQ'D. FOR CONCRETE OVERLAY AT ℄ & CONSTRUCTION JOINTS)

CATHODIC PROTECTION POWER SOURCE SUMMARY

ITEM	UNIT	QUANTITY	REMARKS
Power Source	Each	1	
Type I Double Junction Box	Each	2	
1 1/2" PVC Conduit (Schedule 40)	Lin.Ft.	100	
1 1/2" Galvanized Rigid Steel Conduit	Lin.Ft.	50	
1 1/2" Liquid Tight Flexible Metal Conduit	Lin.Ft.	10	
8"x8"x12" Galvanized Rigid Steel Junction Box	Each	2	
Ground Wire No. 6	Lin.Ft.	145	
No.4 AWG Copper Single Conductor RHN-USE-RHW 600 V Cable	Lin.Ft.	320	
Safety Switch	Each	1	

NO.	BY	DATE	REMARKS
△1	M.U.S.	9-89	CHANGE NOTE AND SUMMARY

REVISIONS

UTAH DEPARTMENT OF TRANSPORTATION
SALT LAKE CITY, UTAH
STRUCTURES DIVISION

STARVATION BRIDGE
DECK REHABILITATION
QUANTITIES

DESIGN	D.J.H.	10-88	CHECK		
DRAWN	M.U.S.	10-88	CHECK	D.J.H.	10-88
QUANT.	D.J.H.	6-89	CHECK	R.L.R.	6-89
APPROVAL RECOMM.	9/21/89 DATE		(GROUP LEADER)		
APPROVED	9/21/89 DATE		(CHIEF STRUCTURAL ENG'R.)		

719 + 20
STATION
DUCHESNE
COUNTY
CONT. NO.
C-560R4
F-015(11)
PROJECT NUMBER
SHT. 1 OF 3

C-560R4

DGN File:JP PwPw0841\9595\16485.C-560R4-01 for information only.dgn
16485
27-OCT-2020

FOR INFORMATION ONLY

C560R4S1

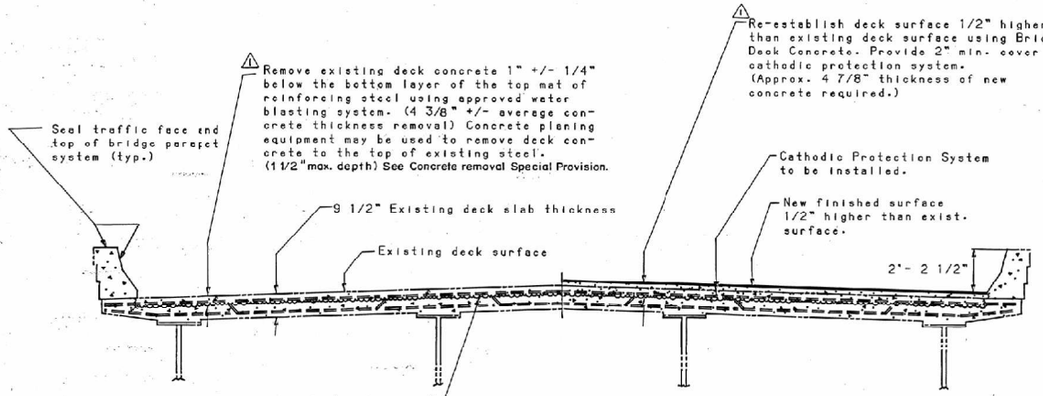

TYPICAL SECTION ACROSS STRUCTURE

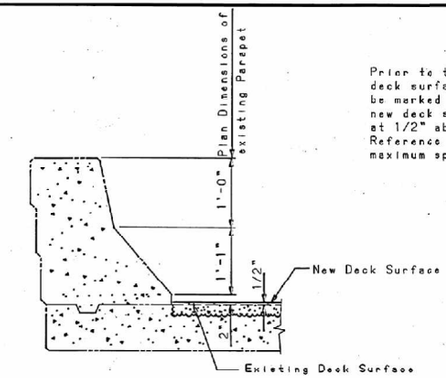

Prior to the removal of the existing deck surface a reference point shall be marked at the parapet such that the new deck surface can be established at 1/2" above the existing deck surface. Reference points shall be marked at maximum spacing of 50 feet.

TYPICAL SCREED REFERENCE POINTS

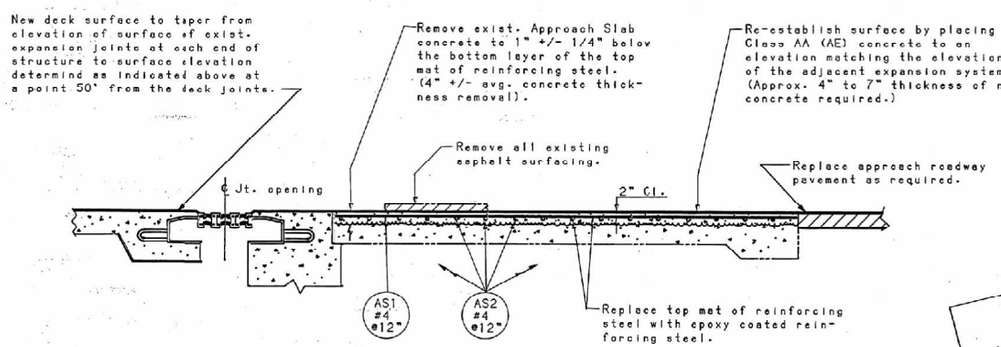

TYPICAL SECTION AT APPROACH SLABS

GENERAL NOTES

1. Material, construction, and workmanship shall be in accordance with the Utah Department of Transportation Standard Specifications for Road and Bridge Construction, Edition of 1979, and Supplements thereto which are in effect at the date of request for bids.
2. All reinforcing steel shall be deformed billet steel bars conforming to ASTM designation A 615, Grade 60. Steel placed in the Approach Slab shall be epoxy coated.
3. All structural steel shall be structural carbon steel conforming to AASHTO designation M-183 except where noted otherwise.
4. Exposed concrete corners shall be chamfered 3/4" except where noted otherwise.
5. Cover to reinforcing steel shall be 2" except where noted otherwise.
6. All cast-in-place concrete shall be Class AA (AE) except where specified otherwise.

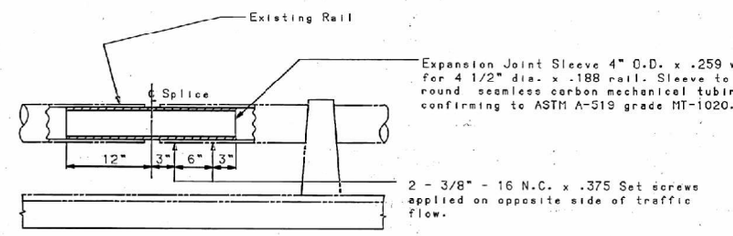

RAIL SPLICE REPAIR DETAIL

(To be furnished in rail panels crossing Expansion Joints)
(4 Locations)

NO.	BY	DATE	REMARKS
1	M.U.S.	9-89	CHANGE NOTES

REVISIONS

UTAH DEPARTMENT OF TRANSPORTATION
SALT LAKE CITY, UTAH
STRUCTURES DIVISION

STARVATION BRIDGE
DECK REHABILITATION
TYPICAL SECTIONS

DESIGN D.J.H. 11-88	CHECK R.L.R. 8-89		719 + 20
DRAWN M.U.S. 11-88	CHECK D.J.H. 1-89		STATION
QUANT.	CHECK		DUCHESNE
APPROVAL RECOMM. 8-15-89 DATE	R.D. Rasmussen ENGINEER OF BRIDGES		COUNTY
APPROVED 8/16/89 DATE	R.L. Talbot P.E. PROJECT ENGINEER STRUCTURAL ENG'R.		C-560 R4
	F-015(11) PROJECT NUMBER		SHT. 2 OF 3

FOR INFORMATION ONLY

27-OCT-2020 16485 DGN File: JP PwPub84\95\95\16485_C-560R4-02 For information only

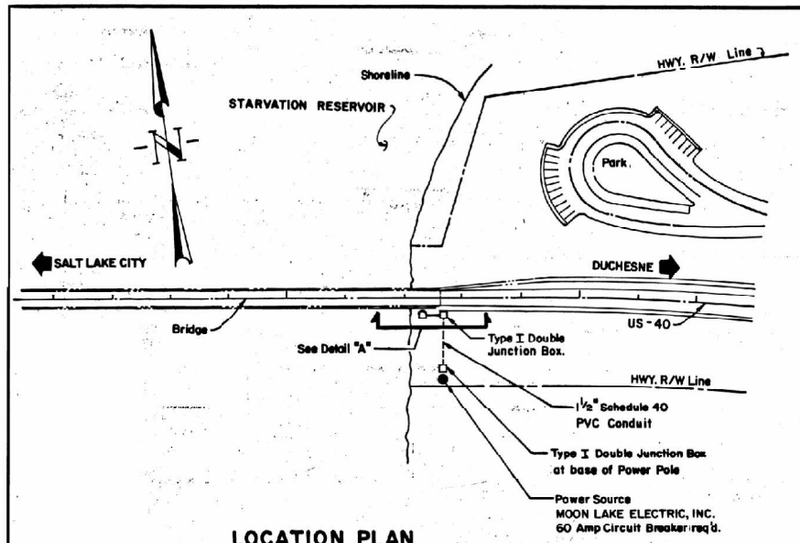

LOCATION PLAN

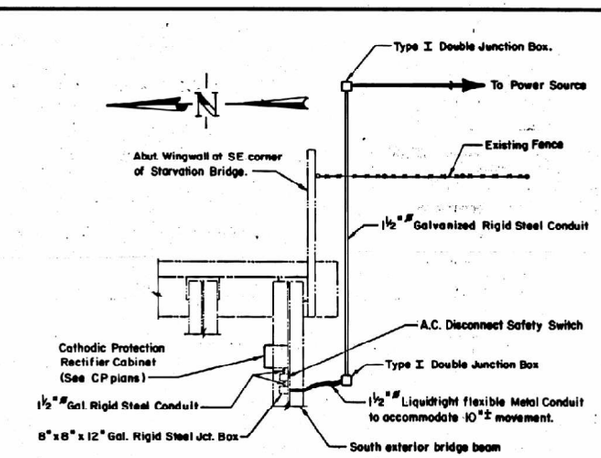

DETAIL "A"

PLAN VIEW OF POWER SOURCE INSTALLATION

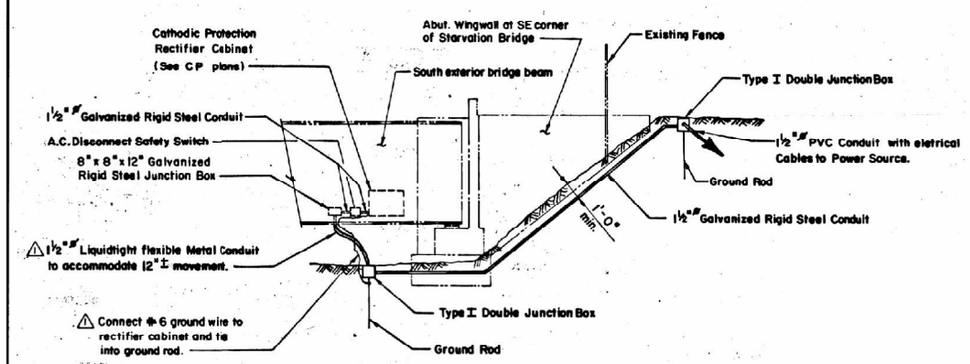

SIDE VIEW OF POWER SOURCE INSTALLATION

NO.	BY	DATE	REMARKS
1	M.U.S.	9-89	ADD & CHANGE NOTES

REVISIONS

UTAH DEPARTMENT OF TRANSPORTATION
SALT LAKE CITY, UTAH
STRUCTURES DIVISION

POWER SOURCE

DESIGN R.L.R. 11-88	CHECK		719+20
DRAWN M.U.S. 11-88	CHECK R.L.R. 11-88		
QUANT.	CHECK		REGION DUCHESNE COUNTY
APPROVED RECOMM. 8-15-89 DATE	R.J. Kammeyer DROP GROUP		DRG. NO.
APPROVED 8/16/89 DATE	Allen Tallat FOR CONSTRUCTION ENGR.		C-560R-4
F-015(11) PROJECT NUMBER			SHT. 3 OF 3

FOR INFORMATION ONLY

DGN File: JP PwPod84\95\95\16485_C-560R4-83.For information only.dgn
16485
27-OCT-2020

GENERAL NOTES

1. Materials, construction, and workmanship shall be in accordance with the Utah Department of Transportation Standard Specifications for Road and Bridge Construction, Edition of 1979, and Supplements thereto which are in effect at the date of request for bids.

2. All reinforcing steel shall be deformed billet steel bars conforming to ASTM designation A 615 Grade 60 and shall be epoxy coated.

3. All structural steel shall be structural carbon steel conforming to AASHTO designation M 270 Grade 36 except where noted otherwise.

4. Exposed concrete corners shall be chamfered 3/4" except where noted otherwise.

5. Cover to reinforcing steel shall be 2" except where noted otherwise.

6. All cast-in-place concrete shall be Class AA(AE) except where specified otherwise.

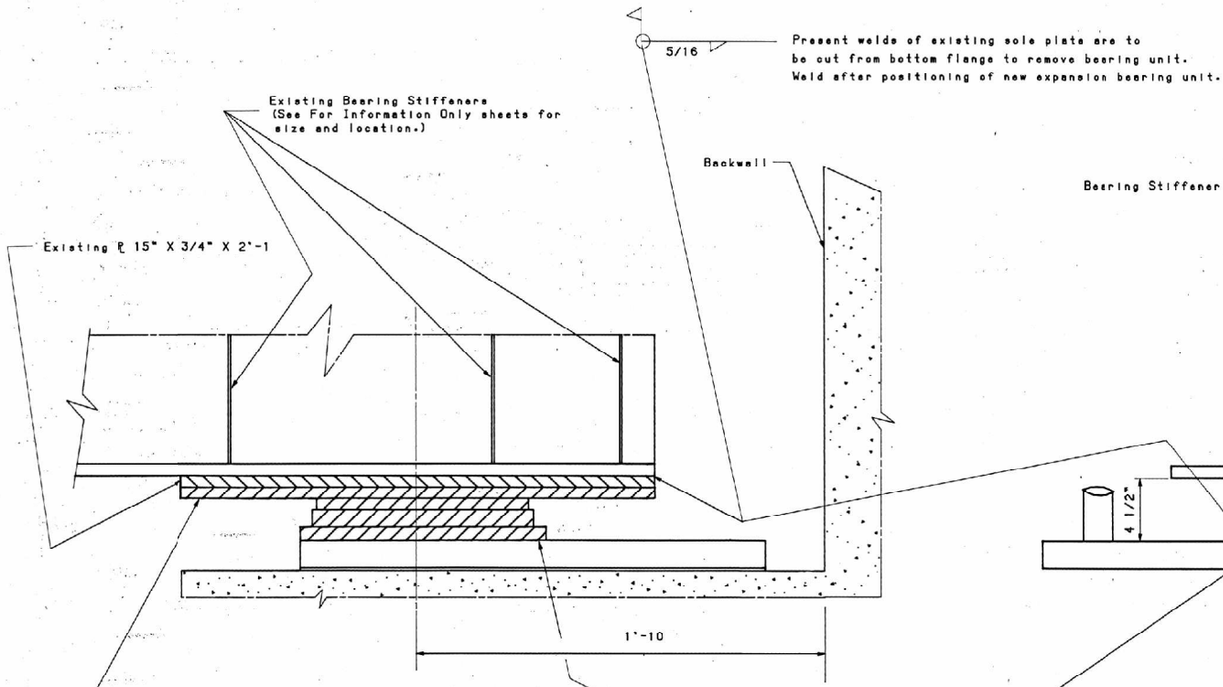

SIDE ELEVATION OF BEARING

WEST ABUTMENT

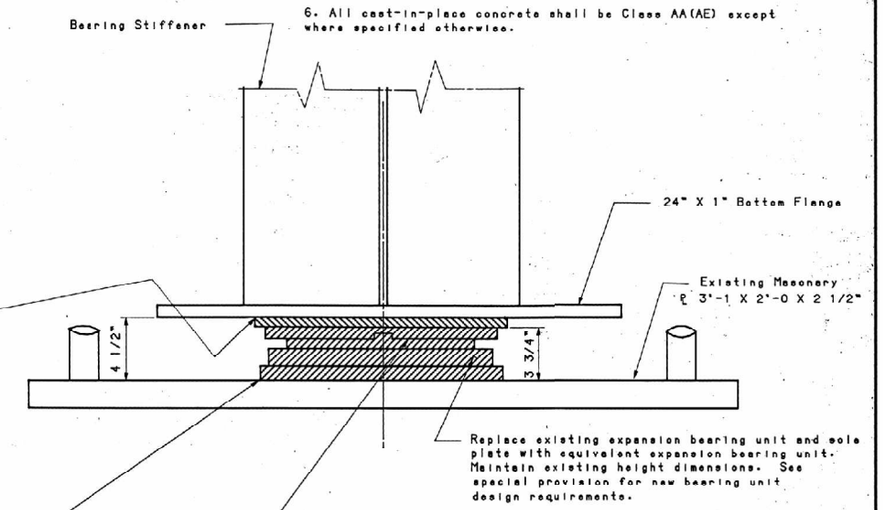

END ELEVATION OF BEARING

WEST ABUTMENT

UTAH DEPARTMENT OF TRANSPORTATION SALT LAKE CITY, UTAH STRUCTURES DIVISION			
DETAIL OF BEARING UNIT MODIFICATIONS WEST ABUTMENT			
DESIGNED A.F.A. 8/23/90	DRAWN P.L.R. 8-90		
CHECKED I.L.B. 8/13/90	CHECKED P.L.R. 8-90		
SUBMITTED	SUPERVISOR	STATION	
APPROVAL 8-24-90	P.E. Petersen	DUCHESNE	
DIVISION DATE	DIRECTOR OF ENGINEERING	SHEET No.	
APPROVED DATE	CHIEF STRUCTURAL ENG'R	C-560R-5	
F-15 (11)		SHT. 1 OF 2	
PROJECT NUMBER			

NO.	BY	DATE	REMARKS

REVISIONS

C-560R5

DGN File:JP PwPw0845\595\16485_C-560R5-01 for information only.dgn

16485

27-OCT-2020

FOR INFORMATION ONLY

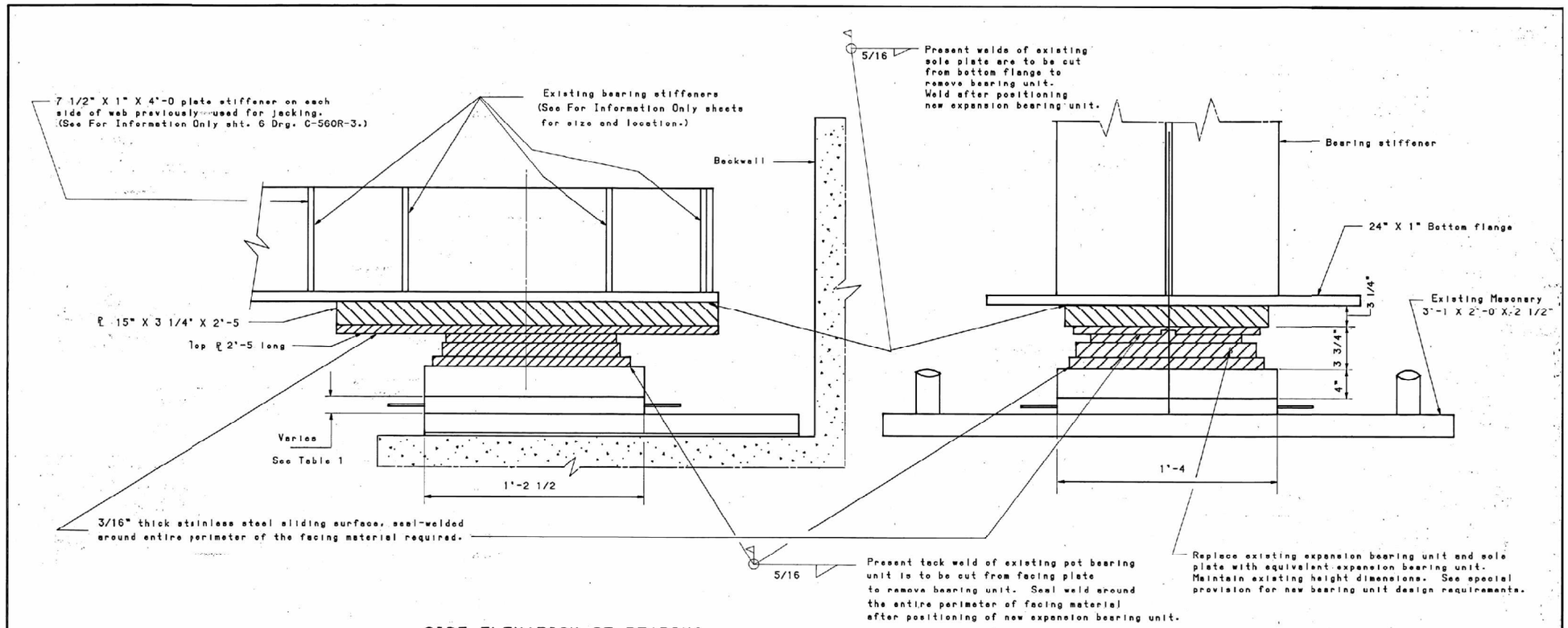

SIDE ELEVATION OF BEARING
EAST ABUTMENT

END ELEVATION OF BEARING
EAST ABUTMENT

TABLE

East Abutment
Shim Plate Thickness

Beam No. starting with South exterior beam	Shim plate Centerline thickness (inches)
1	1.80
2	2.40
3	3.00
4	3.60

NO.	BY	DATE	REMARKS

REVISIONS

UTAH DEPARTMENT OF TRANSPORTATION
SALT LAKE CITY, UTAH
STRUCTURES DIVISION

DETAIL OF BEARING UNIT
MODIFICATIONS
EAST ABUTMENT

DESIGNED Ara. 8/23/90 CHECKED P.L.P. 8-90
DRAWN T.L.B. 8/90 CHECKED P.L.P. 8-90
CHECKED
APPROVED 8-24-90 DATE P.L.P. CHIEF STRUCTURAL ENG'R.
APPROVED DATE CHIEF STRUCTURAL ENG'R.

STATION
DUCHESNE
COUNTY
STA. NO.
C-560R-5
F-15(11)
PROJECT NUMBER
SHT. 2 OF 2

FOR INFORMATION ONLY

DGN File:JP PwPw0841\595\16485.C-560R5-02 For information only
16485
27-OCT-2020

BRIDGE NO.	LOCATION	Out to Out Deck Width	Skew	No. of exist. Joints in Bridge	No. of Joints to be closed	No. of exist. Joints to be modified	Expansion Joint Modification	Pot Bearing Units Replacement	Parapet Sealing	Pedestal Repair	Cleaning and Painting Bearing Units	Anti-Graffiti Cover Plates	Cathodic Protection Repair
							Lin-Ft.	Each	Lin.Ft.	Each	Each	Lump	Day
C-560	Starvation Reservoir Bridge	43.5'	0°	2	0	2	87	8	3.349	3	8	1	14
					USE *		87	8	3.349	3	8	1	14

* Quantities used in the Engineer's Estimate.

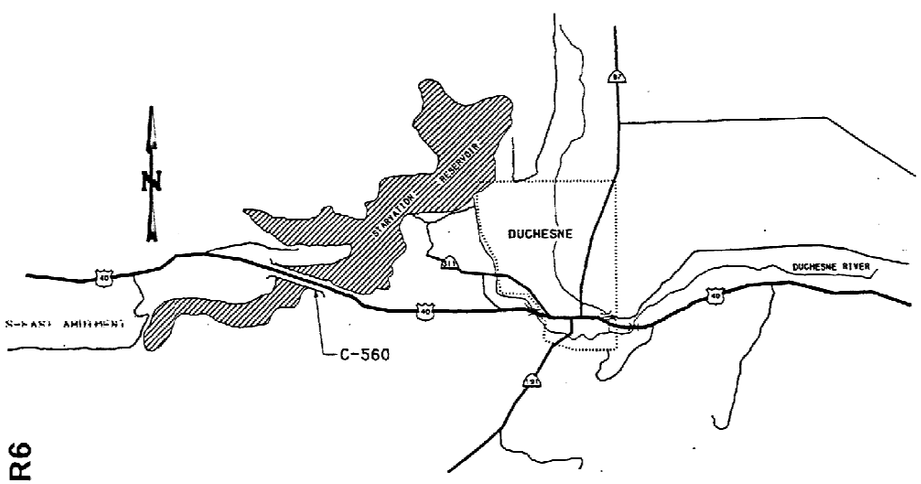

LOCATION KEY

GENERAL NOTES

1. All reinforcing steel shall be epoxy coated deformed billet-steel bars conforming to AASHTO M 284 and M 31 (Grade 60) respectively.
2. All structural steel shall conform to AASHTO M 270 (Grade 36) except where noted otherwise.
3. Chamfer all exposed concrete corners 3/4" except where noted otherwise.
4. Provide 2" concrete cover to reinforcing steel except where noted otherwise.
5. All cast-in-place concrete shall be Class AA (AE) except where noted otherwise.

DESIGN DATA

Cast-in-place Concrete: f_c= 1,400 psi; f_s (reinf.)= 24,000 psi; n=8
Structural Steel: f_o= 20,000 psi

INDEX OF SHEETS

1.- SUMMARY AND LOCATION KEY
2.- MODULAR JOINT SYSTEM PLAN VIEW AND CROSS SECTION
3.- MODULAR JOINT SYSTEM TYPICAL SECTION
4.- POT BEARING UNITS REPLACEMENT DETAILS-EAST ABUTMENT
5.- POT BEARING UNITS REPLACEMENT DETAILS-WEST ABUTMENT
6.- ANTI-GRAFFITI COVER PLATE DETAILS

NO.	BY	DATE	REMARKS
			REVISIONS 33003

UTAH DEPARTMENT OF TRANSPORTATION
SALT LAKE CITY, UTAH
STRUCTURES DIVISION

US-40, STARVATION RESERVOIR BRIDGE
BRIDGE REHABILITATION
SUMMARY AND LOCATION KEY

DESIGN S.D.J. 2-97 CHECK
DRAWN S.M.P. 2-97 CHECK
QUANT. CHECK
APPROVAL RECOMM. DATE CHIEF ENGINEER
APPROVED DATE CHIEF STRUCTURAL ENGR.

VARIES
STATION
DUCHESNE
COUNTY
C-560R6
DRG. NO.
SHT. 1 OF 6

SP-0040 (24) 89
PROJECT NUMBER

C 560R6

ISTRSHP.C-DRWG.DGN

FOR INFORMATION ONLY

DGN File:IP PwPad84\95\16485.C-560R6-01 for information only.dgn
16485
27-OCT-2020

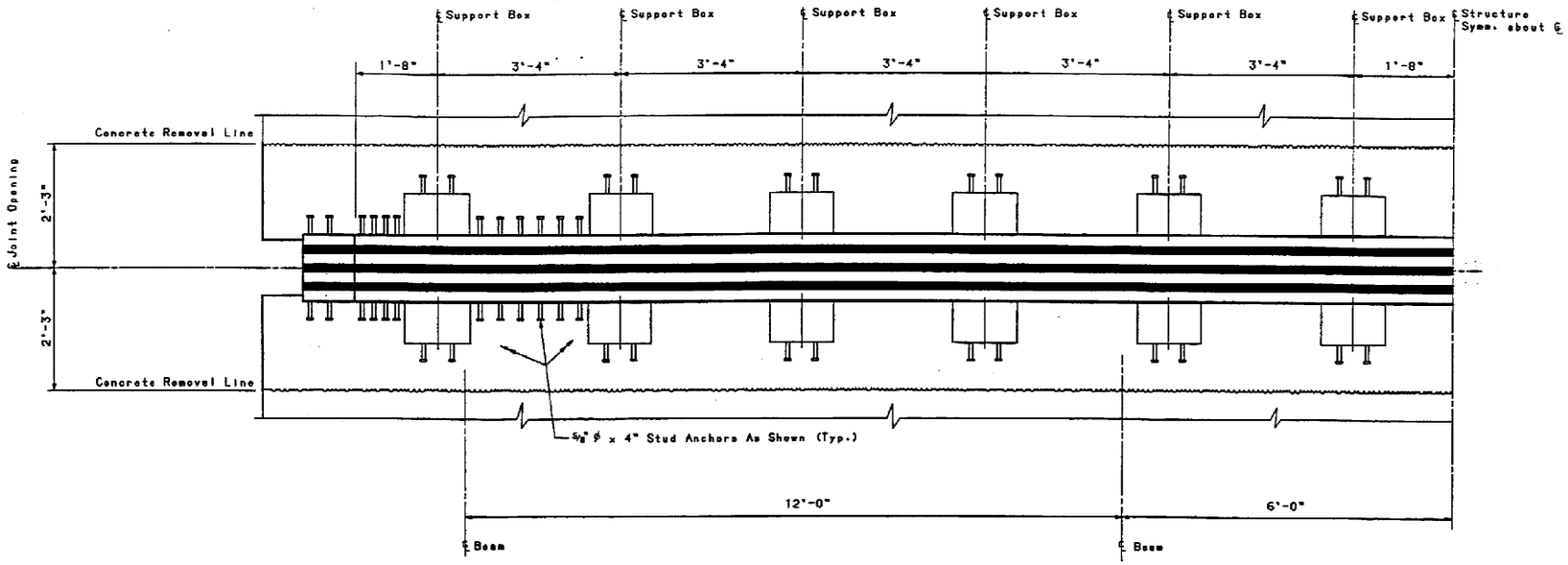

MODULAR JOINT SYSTEM PLAN VIEW
(HALF SECTION)

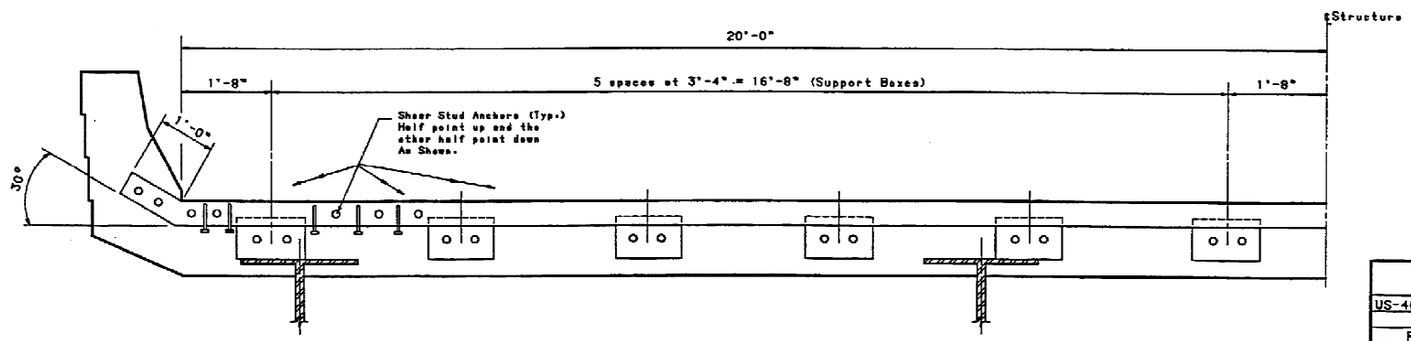

CROSS SECTION
(SHOWING DECK SIDE)

FOR TYPICAL SECTION SEE SHEET NO.3

NO.	BY	DATE	REMARKS

REVISIONS

UTAH DEPARTMENT OF TRANSPORTATION
SALT LAKE CITY, UTAH
STRUCTURES DIVISION

US-40, STARVATION RESERVOIR BRIDGE
MODULAR JOINT SYSTEM
PLAN VIEW AND CROSS SECTION

DESIGN S.D.J. 2/97 CHECK
DRAWN S.R.F. 2/97 CHECK
SHEET CHECK

VARIES

APPROVED DESIGN ENGR. DATE GROUP LEADER
APPROVED DATE PROJ. STRUCTURAL ENGR.

SP-0040 (24) 89
PROJECT NUMBER 33003

SYSTEM DUCHESNE
SHEET
C-560R6
DRG. NO.
SHT. 2 OF 6

[STRSHP.C-DRNG]C560R6S2 2/97

DGN File:IP PwPw@415395\16485.C-560R6-02 For information only

27-OCT-2020 16485

FOR INFORMATION ONLY

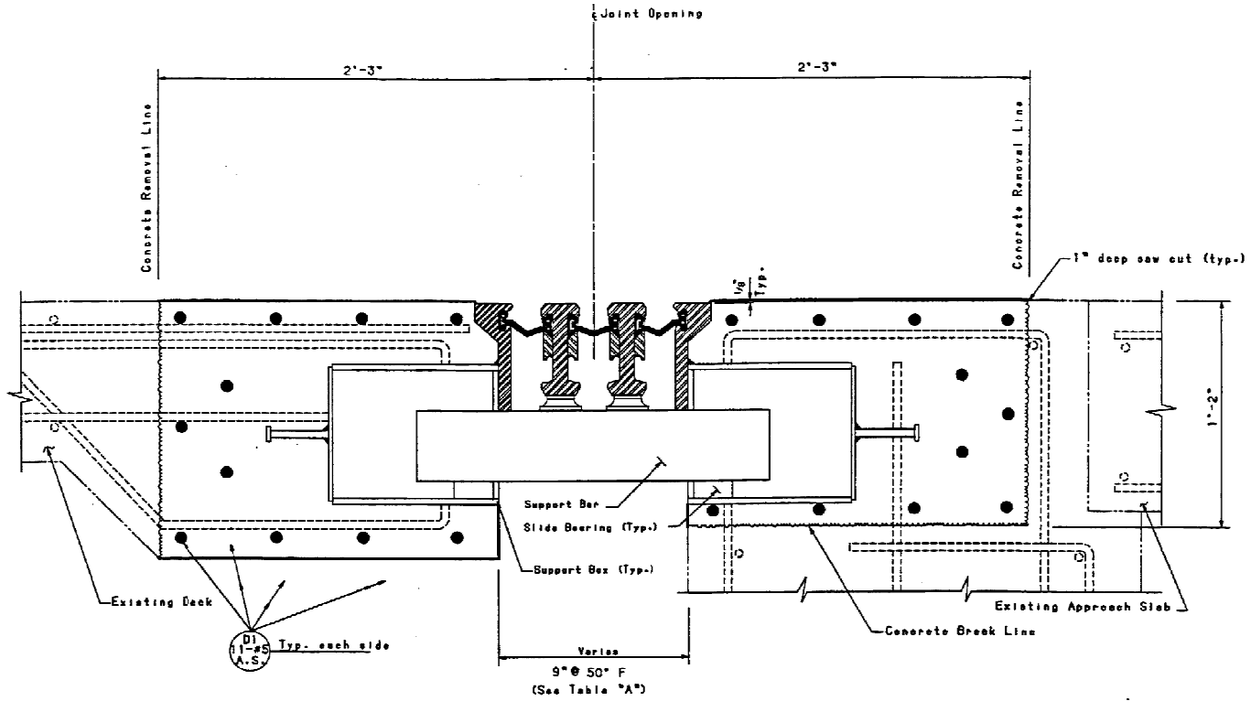

SECTION THRU JOINT AND SUPPORT BOX

NOTES

1.- Remove concrete to break lines shown.

2.- Remove existing bars that lie parallel to the joint and are fully exposed by the concrete removal operations in the deck. Place new epoxy coated bars as shown.

3.- Retain in place all partially exposed existing reinforcing steel. Bend existing bars, as required, to allow placement of the new joint anchorage system.

4.- Sandblast clean of all corrosion the existing reinforcing steel that is partially exposed in the deck or parapet after removal operations.

5.- Furnish new bars such that splices (2'-2" long) are only located at construction joint locations.

6.- Hot-dip galvanize all structural steel, namely the complete Expansion Joint System after fabrication in accordance with AASHTO M 111. No warping is acceptable in the process of Galvanizing.

7.- Repair any paint damage to the framing elements occuring during construction.

8.- The actual Modular Joint System accessories and the working mechanism inside the support boxes uniquely depends on the particular Modular Joint System.

TABLE "A"

LOCATIONS	NUMBER OF EXPANSION CELLS	CELL RATED CAPACITY	TEMPERATURE IN ° F					
			-20°	50°	60°	70°	80°	110°
East and West Abutments	3	3" EACH	13.5	9.0	8.4	7.7	7.1	5.2

NO.	BY	DATE	REMARKS

REVISIONS

UTAH DEPARTMENT OF TRANSPORTATION
SALT LAKE CITY, UTAH
STRUCTURES DIVISION

US-40, STARVATION RESERVOIR BRIDGE
MODULAR JOINT SYSTEM
TYPICAL SECTION

DESIGN S.D.J. 2/97 CHECK
DRAWN J.P.F. 2/97 CHECK
SURVY. CHECK
APPROVAL RECOMM. DATE SUPVR ACCEPT.
APPROVED DATE CHIEF STRUCTURAL ENGR.

VARIES
STATION
DUCHESNE
COUNTY
C-560R6
DRG. NO.
SHT. 3 OF 6
SP-0040 (24) 89
PROJECT NUMBER

FOR INFORMATION ONLY

LSTRSMP.C-DRWG3C560R6S3 2/97

DGN File:IP PwPrd84195\95\16485.C-560R6-03.for information only.dgn

27-OCT-2020 16485

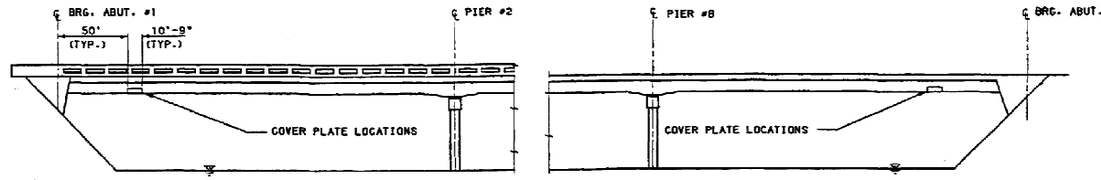

GRAFFITI COVER LOCATION

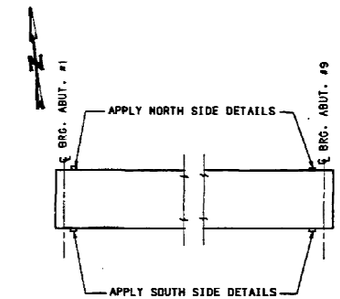

PLAN VIEW

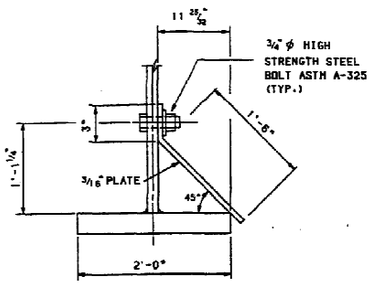

TYP. COVER SECTION

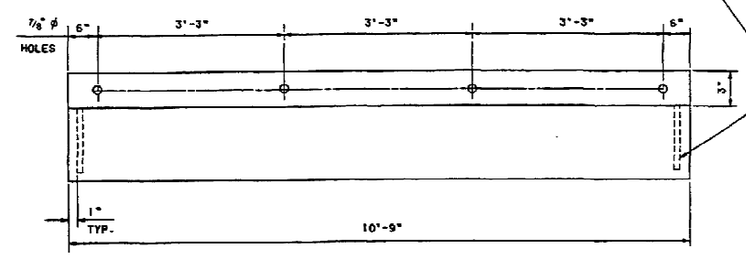

COVER ELEVATION

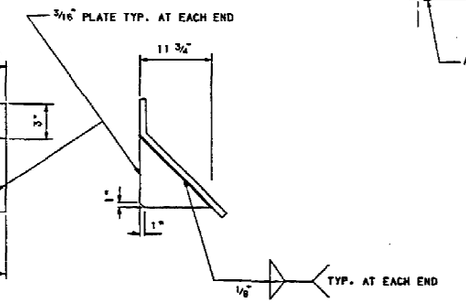

COVER END VIEW

SOUTH SIDE DETAILS

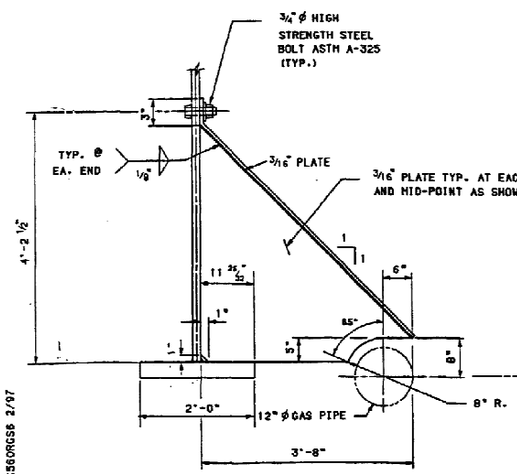

TYP. COVER SECTION

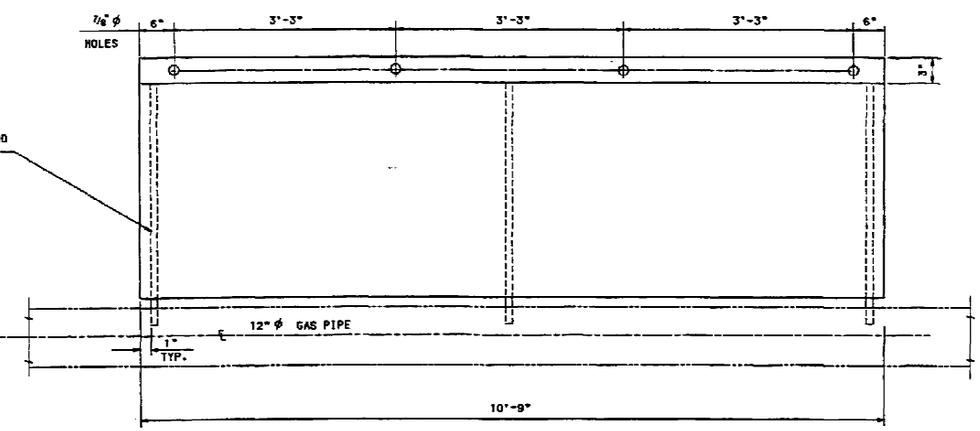

COVER ELEVATION

NORTH SIDE DETAILS

NO.	BY	DATE	REMARKS

REVISIONS

UTAH DEPARTMENT OF TRANSPORTATION
SALT LAKE CITY, UTAH
STRUCTURES DIVISION

US-40, STARVATION RESERVOIR BRIDGE
BRIDGE REHABILITATION
ANTI-GRAFFITI COVER PLATE DETAILS

DESIGN S.R.J. 2-97 CHECK
DRAWN S.M.P. 2-97 CHECK
CHECK CHECK

VARIES

STATION
DUCHESNE
COUNTY

C-560R6
DRG. NO.

SHT. 6 OF 6

SP-0040 (24) 89
PROJECT NUMBER

FOR INFORMATION ONLY

CSTRSHP.C-DWG:C560RGS6 2/97
DGN File:IP PwPw8415955\16485.C-560R6-86.for information only.dgn
16485
27-OCT-2020

QUANTITIES

STRUCTURE NUMBER	STRUCTURE NAME	MILE POST	DECK DRAIN PIPE EXTENSION	PAVEMENT MARKING PAINT ✳	THIN BONDED POLYMER OVERLAY, TYPE I	POLYMER OVERLAY REMOVAL	PARAPET SEALING	PEDESTAL REPAIR	WINGWALL REPAIR	ABUTMENT BACKWALL REPAIR	PARAPET REPAIR	DECK EDGE REPAIR	PARAPET MODIFICATION	PARAPET END MODIFICATION	STRUCTURAL POTHOLE PATCHING	JOINT GLAND REPLACEMENT
			EACH	GAL	SQ FT	SQ FT	FT	EACH	SQ FT	SQ FT	FT	FT	FT	EACH	SQ FT	FT
C-560	US-40 OVER STARVATION RESERVOIR	81.15	2	✳	67,230	67,230	3,350	3	50	10	235	10	3,270	4	5,380	85

✳ INCLUDED IN ROADWAY QUANTITIES

INDEX OF SHEETS

1. SUMMARY AND GENERAL NOTES
2. C-560 PLAN AND DETAILS
3. PARAPET MODIFICATION DETAILS
4. PARAPET END MODIFICATION DETAILS 1 OF 2
5. PARAPET END MODIFICATION DETAILS 2 OF 2
6. PARAPET PRESERVATION DETAILS
7. MISCELLANEOUS PRESERVATION DETAILS
8. SUBSTRUCTURE REPAIR DETAILS
9. STRUCTURAL POTHOLE PATCHING DETAILS
10. REINFORCING SCHEDULE

FOR INFORMATION ONLY SHEETS

C-560 SHEET 1 OF 17
C-560 SHEET 4 OF 17
C-560 SHEET 10 OF 17
C-560 SHEET 11 OF 17
C-560 SHEET 13 THROUGH 17 OF 17
C-560R2 SHEET 1 OF 5
C-560R2 SHEET 2 OF 5
C-560R2 SHEET 3 OF 5
C-560R3 SHEET 1 THROUGH 10 OF 10
C-560R4 SHEET 1 THROUGH 3 OF 3
C-560R5 SHEET 1 OF 2
C-560R5 SHEET 2 OF 2
C-560R6 SHEET 1 OF 6
C-560R6 SHEET 2 OF 6
C-560R6 SHEET 3 OF 6
C-560R6 SHEET 6 OF 6

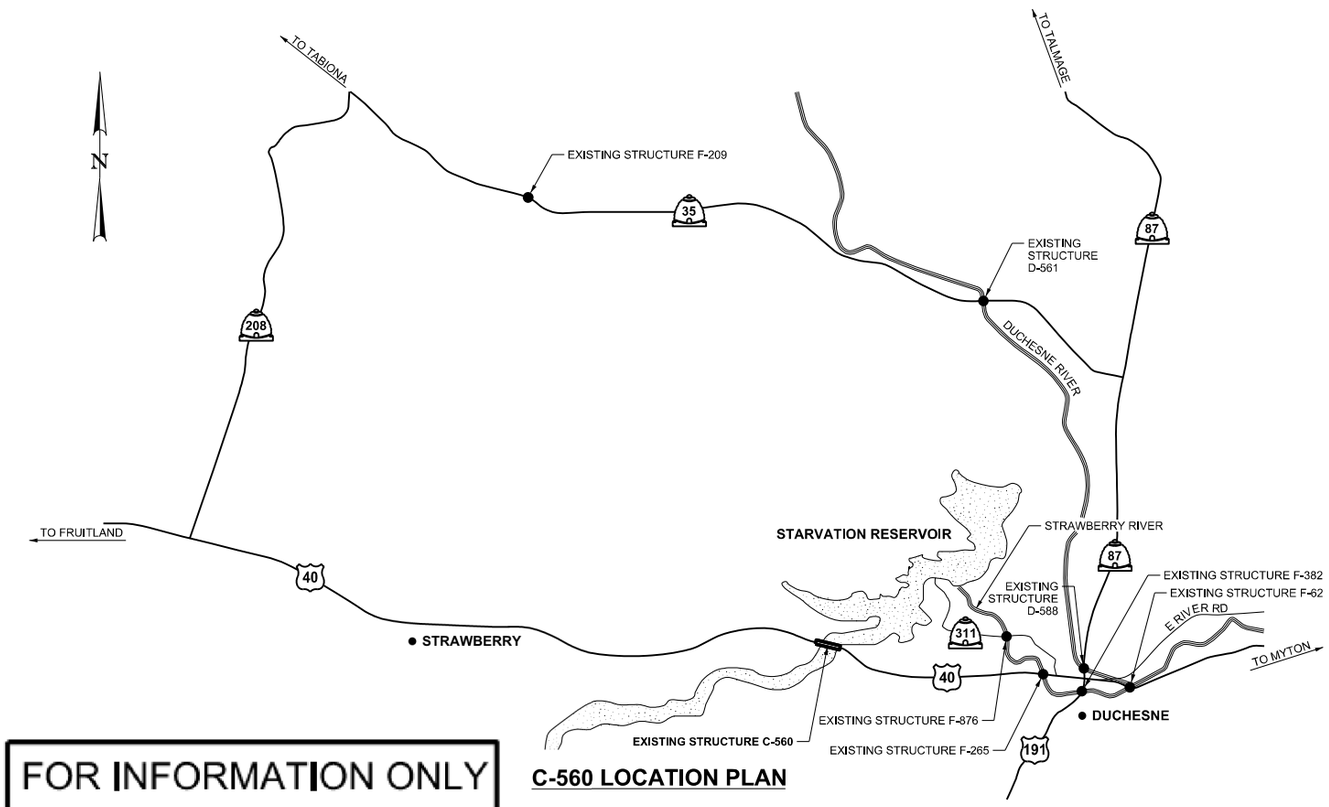

FOR INFORMATION ONLY

C-560 LOCATION PLAN

ELECTRONIC SEAL
Cody Parker
No. 7549361
CODY R. PARKER
10/28/2020
STATE OF UTAH
PROFESSIONAL ENGINEER

THIS SEAL APPLIES TO ALL SHEETS CONTAINING THE SIGNATURE ON THE SEAL

UTAH DEPARTMENT OF TRANSPORTATION
AUTHORIZED FOR USE

Mark Ewinski
UDOT STRUCTURES DESIGN MANAGER

DESIGN DATA

PRESERVATION WORK ONLY, NO DESIGN CHECKS PERFORMED

STRUCTURAL CONCRETE
ALL LOCATIONS UNLESS SHOWN OTHERWISE: 145 PCF f'c = 4.0 KSI n = 8 CLASS AA(AE)
STRUCTURAL POTHOLE PATCHING: 145 PCF f'c = 4.0 KSI n = 8 CLASS AA(LS)

REINFORCING STEEL
ALL LOCATIONS UNLESS SHOWN OTHERWISE fy = 60 KSI

GENERAL NOTES

1. USE COATED DEFORMED CARBON STEEL BARS CONFORMING TO AASHTO M111 OR ASTM A775, AND AASHTO M31 GRADE 60, UNLESS SHOWN OTHERWISE.
2. CHAMFER EXPOSED CONCRETE CORNERS 3/4 INCH UNLESS SHOWN OTHERWISE.
3. PROVIDE 2 INCH MINIMUM CONCRETE COVER TO REINFORCING STEEL UNLESS SHOWN OTHERWISE.
4. VERIFY UTILITY LOCATIONS BEFORE CONSTRUCTION PROTECT EXISTING UTILITIES IN PLACE UNLESS SHOWN OTHERWISE.
5. COAT OR GALVANIZE MISCELLANEOUS STEEL PLACED IN STRUCTURAL CONCRETE, UNLESS NOTED OTHERWISE.
6. RE-ESTABLISH PAVEMENT MARKING PAINT THAT IS DAMAGED OR REMOVED DURING WORK ON STRUCTURES. MATCH EXISTING PAINT LINE CONFIGURATIONS. DO NOT GRIND IN PAINT ON STRUCTURES.
7. DIMENSIONS SHOWN ARE BASED ON EXISTING DRAWINGS. VERIFY ALL DIMENSIONS BEFORE FABRICATION OF HARDWARE OR COMPONENTS REQUIRED FOR PRESERVATION. COMPLETE VERIFICATION BEFORE BEGINNING CONSTRUCTION.
8. DO NOT SCALE DRAWINGS. HORIZONTAL DIMENSIONS ARE PLAN. VERTICAL DIMENSIONS ARE PLUMB.

REV NO	DATE	BY	REMARKS	DE	CHECK	DF	CHECK
				P 06/20	RFC 07/20	M 06/20	RFC 07/20

Cody Parker
ENGINEER OF RECORD (EOR)
10/27/2020
DATE

UTAH DEPARTMENT OF TRANSPORTATION
STRUCTURES DIVISION

US-40; STARVATION RES BRIDGE PRESERVATION, 0C 560
STRUCTURE PRESERVATION
SUMMARY AND GENERAL NOTES
PIN 16485
PROJECT NUMBER S-0040(198)81

DUCHESNE
COUNTY

C-560
STRUCTURE NUMBER

C-560R8
DRAWING NUMBER

SHEET 1 OF 10

27-Oct-2020 DGN: Files\P_Parker\8415795\16485_C-560R8-01_Summary and General Notes.dgn

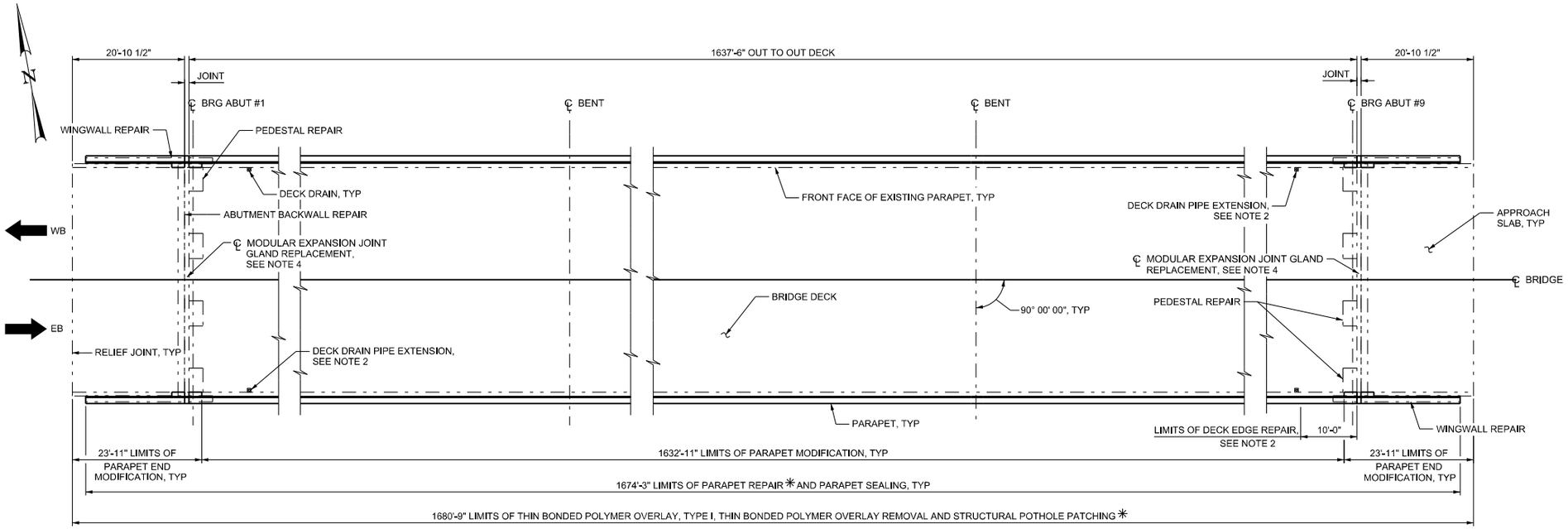

C-560 PLAN

* LIMIT IS FOR SOUNDING, SEE QUANTITY TABLE ON "SUMMARY AND GENERAL NOTES" FOR ESTIMATED QUANTITY

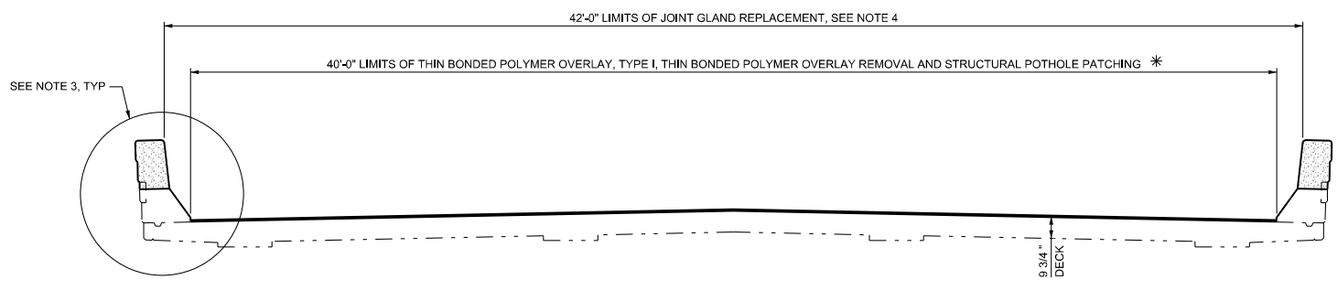

TYPICAL SECTION FOR SURFACING

NOTES

1. SEE "STRUCTURAL POTHOLE PATCHING DETAILS" FOR DECK REPAIR REQUIREMENTS.
2. SEE "MISCELLANEOUS PRESERVATION DETAILS" FOR DECK DRAIN PIPE EXTENSION DETAILS AND DECK EDGE REPAIR DETAILS.
3. SEE "PARAPET MODIFICATION DETAILS", "PARAPET END MODIFICATION DETAILS 1 OF 2", "PARAPET END MODIFICATION DETAILS 2 OF 2" AND "PARAPET PRESERVATION DETAILS" FOR PARAPET REQUIREMENTS.
4. SEE FOR INFORMATION ONLY SHEETS FOR EXISTING EXPANSION JOINT DETAILS FOR JOINT GLAND REPLACEMENT. VERIFY EXISTING JOINT STYLE BEFORE ORDERING JOINT GLAND.
5. SEE "SUBSTRUCTURE REPAIR DETAILS" FOR ABUTMENT BACKWALL REPAIR, WINGWALL REPAIR AND PEDESTAL REPAIR DETAILS.

FOR INFORMATION ONLY

REV NO	DATE	BY	REVISION REMARKS

DESIGN CKP 06/20 CHECK RFC 07/20
DRAWN LKM 06/20 CHECK RFC 07/20

ENGINEER OF RECORD (SEAL)
10/27/2020
DATE

UTAH DEPARTMENT OF TRANSPORTATION
STRUCTURES DIVISION

US-40; STARVATION RES BRIDGE PRESERVATION, 0C 560
STRUCTURE PRESERVATION
C-560 PLAN AND DETAILS
PROJECT NUMBER S-0040(198)81 PIN 16485

DUCHESNE
COUNTY
C-560
STRUCTURE NUMBER
C-560R8
DRAWING NUMBER
SHEET 2 OF 10

DGN Files:IP_PkPro:8415395\16485_C-560R8-02_Plan and Details.dgn
27-OCT-2020

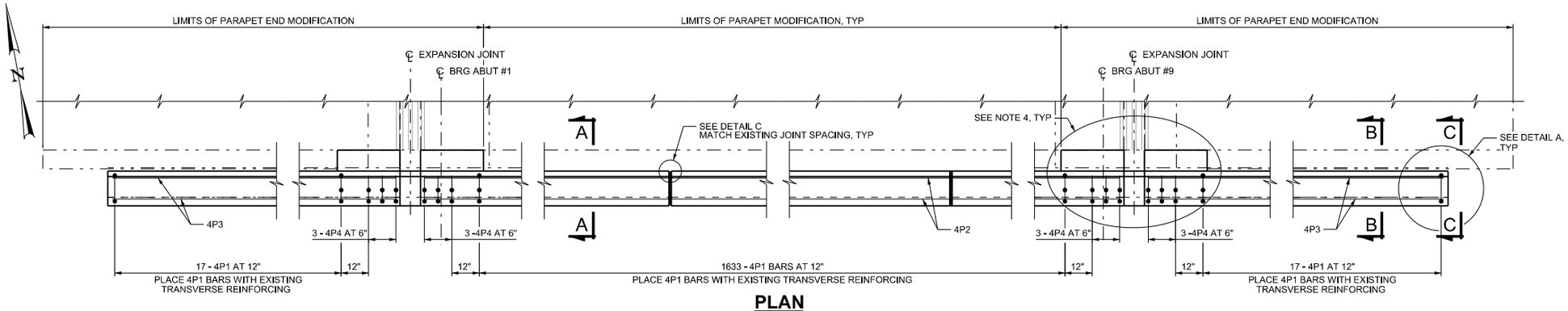

PLAN

SOUTH PARAPET SHOWN, NORTH PARAPET SIMILAR

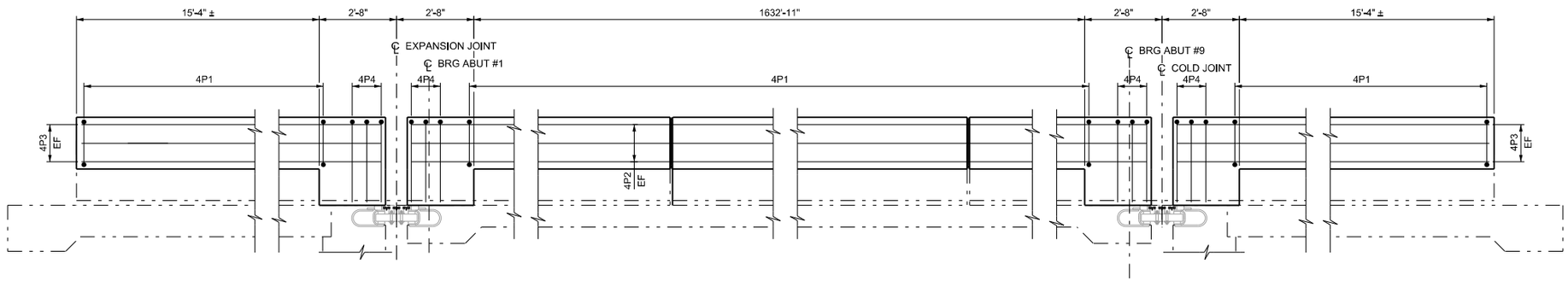

ELEVATION

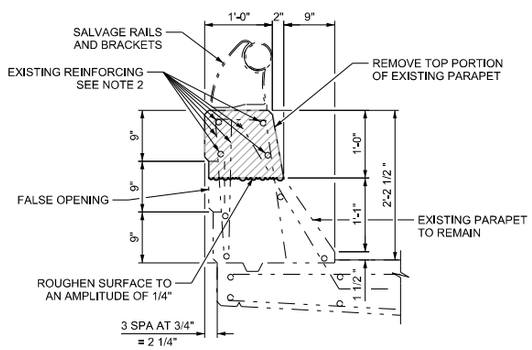

SECTION A-A REMOVAL LIMITS

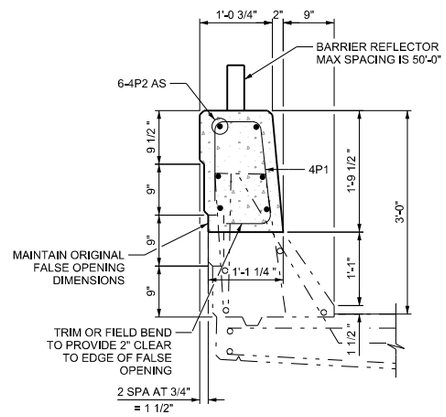

SECTION A-A

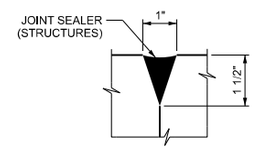

DETAIL C

CONTRACTION JOINT

NOTES

1. PROTECT EXISTING STRUCTURES, UTILITIES AND OTHER FEATURES UNLESS NOTED OTHERWISE.
2. IT IS PERMITTED TO PRESERVE SOUND, EXISTING LONGITUDINAL REINFORCING STEEL IN TOP PORTION OF PARAPET IN LIEU OF REPLACING LONGITUDINAL REINFORCING STEEL. PRESERVE ALL OTHER EXISTING REINFORCING STEEL IN THE PARAPET.
3. SEE "PARAPET END MODIFICATION DETAILS 1 OF 2" FOR SECTION B-B, SECTION C-C AND DETAIL A.
4. SEE "PARAPET END MODIFICATION DETAILS 2 OF 2" FOR PARAPET COVER PLATE DETAILS.
5. SEE "PARAPET PRESERVATION DETAILS" FOR PARAPET REPAIR DETAILS.
6. ALTERNATE ALL REINFORCING SPLICES.
7. PLACE CONTRACTION JOINT ON SIDES AND ON TOP OF PARAPET.
8. EXTEND JOINT SEALER (STRUCTURES) FROM DECK TO TOP OF PARAPET ON THE PARAPET INSIDE FACE AND ACROSS TOP OF PARAPET.
9. LOCATE STRUCTURE NUMBER ON RIGHT-HAND SIDE OF APPROACH PARAPET. SEE "PARAPET END MODIFICATION DETAILS 1 OF 2" FOR STRUCTURE NUMBER DETAILS.

FOR INFORMATION ONLY

REV NO	DATE	BY	REVISION REMARKS

DESIGN CKP 06/20 CHECK RFC 07/20
DRAWN LKM 06/20 CHECK RFC 07/20

10/27/2020 DATE
ENGINEER OF RECORD (PDH)

UTAH DEPARTMENT OF TRANSPORTATION
STRUCTURES DIVISION

US-40; STARVATION RES BRIDGE PRESERVATION, 0C 560

STRUCTURE PRESERVATION

PARAPET MODIFICATION DETAILS

PROJECT NUMBER S-0040(198)81 PIN 16485

DUCHESNE
COUNTY

C-560
STRUCTURE NUMBER

C-560R8
DRAWING NUMBER

SHEET 3 OF 10

DGN Files:P:\Pw\p0415395\16485_C-560R8-03-Parapet Modification Details.dgn
27-OCT-2020

FOR INFORMATION ONLY

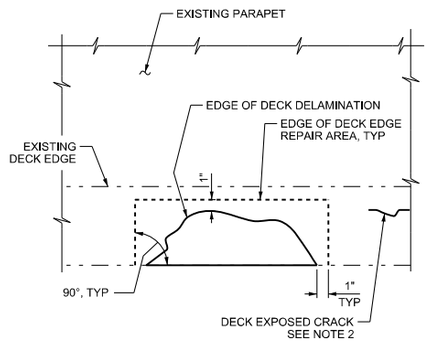

DECK EDGE REPAIR ELEVATION

REINFORCING STEEL NOT SHOWN FOR CLARITY, SEE NOTE 3

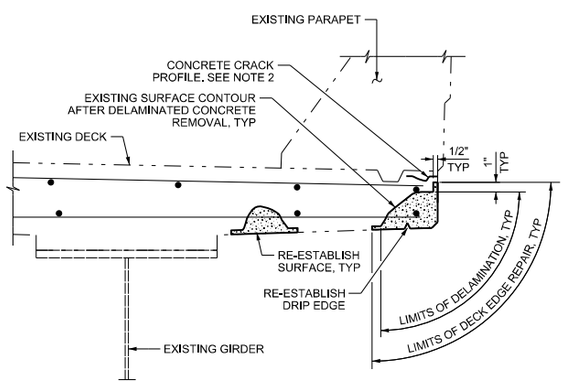

DECK EDGE REPAIR SECTION

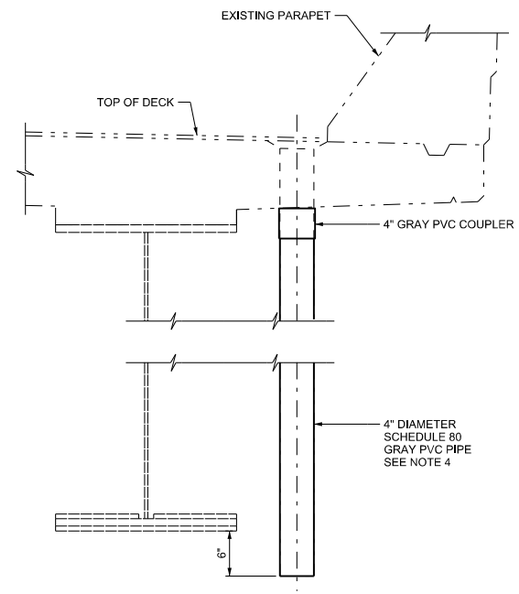

DECK DRAIN PIPE EXTENSION DETAIL

NOTES

1. DETAILS SHOWN ARE SCHEMATIC IN NATURE, ARE SHOWN FOR ILLUSTRATIVE PURPOSES, AND DO NOT REPRESENT ACTUAL CONDITIONS.
2. EPOXY INJECTION OF CRACKS IS NOT REQUIRED FOR DECK EDGE REPAIR.
3. KEEP THE EXPOSED REINFORCING STEEL AND CONCRETE SURFACE CLEAN OF ALL DIRT, DUST, ETC. UNTIL NEW CONCRETE HAS BEEN PLACED.
4. FIELD VERIFY DRAIN PIPE DIMENSIONS PRIOR TO FABRICATION.

REV NO	DATE	BY	REVISION REMARKS

DESIGN CKP 06/20 CHECK RFC 07/20
DRAWN LKM 06/20 CHECK RFC 07/20

10/27/2020 DATE
ENGINEER OF RECORD (SEAL)

UTAH DEPARTMENT OF TRANSPORTATION
STRUCTURES DIVISION

US-40; STARVATION RES BRIDGE PRESERVATION, 0C 560
STRUCTURE PRESERVATION
MISCELLANEOUS PRESERVATION DETAILS
PIN 16485
PROJECT NUMBER S-0040(198)81

DUCHESNE
COUNTY

C-560
STRUCTURE NUMBER

C-560R8
DRAWING NUMBER

SHEET 7 OF 10

DGN Files:P:PwPw:0415395\16485_C-560R8-07_Miscellaneous Preservation Details.dgn
27-OCT-2020