GR-RS-SC JOINT POWERS WATER BOARD

CROSSROADS PUMP STATION

GR-RS-SC JOINT POWERS WATER BOARD

ROB YOUNG	CHAIRMAN
JASON PALMER	VICE CHAIRMAN
TERRY LEIGH	SECRETARY/TREASURER
AARON REICHI	BOARD MEMBER
RICK LEE	BOARD MEMBER
BRYAN SEPPIE, P.E.	GENERAL MANAGER
JAMES TARDONI, P.E.	ENGINEER
DAVE LATORRE	PRODUCTION MANAGER

ENGINEERING CONSULTANTS

DAVE KENNINGTON, P.E.	PROJECT ENGINEER
KIM P. HARRIS, P.E.	MECHANICAL ENGINEER
BURNS & MCDONNELL	ELECTRICAL ENGINEER

RELEASED FOR BID

JOINT POWERS
WATER BOARD
GREEN RIVER - ROCK SPRINGS - SWEETWATER COUNTY

SUNRISE ENGINEERING
47 EAST 4TH AVENUE
AFTON, WYOMING 83110
TEL 307.885.8500 · FAX 307.885.8501
www.sunrise-eng.com

P:\WWDC GR-RS-SC JPWB Cross Roads Pump Station Level III (S07265)\Dwg C3D\Sheets\COVER.dwg Feb 12, 2026 4:16pm bjenkins

VICINITY MAP

NOT TO SCALE

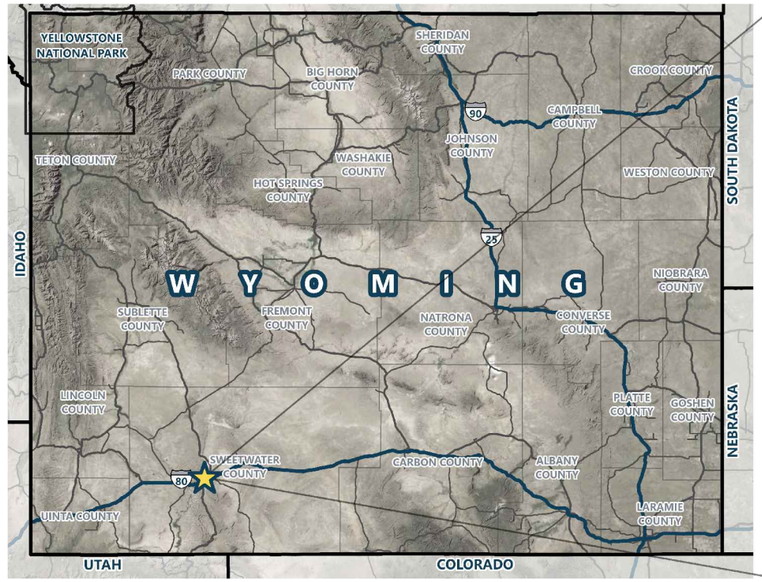

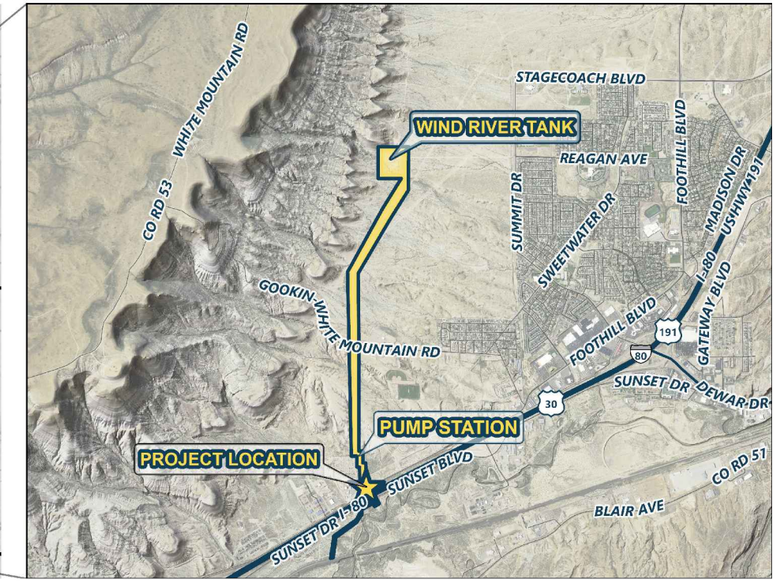

SHEET INDEX

1 - GENERAL:	DWG. NO	SHEET NO.
COVER SHEET	G1	1
AREA MAP, LOCATION MAP, AND SHEET INDEX	G2	2
ABBREVIATIONS AND LEGEND	G3	3
DESIGN CRITERIA AND SYSTEM CURVE	G4	4
HYDRAULIC GRADE PROFILE	HP	5
SOIL TYPES	SOIL	6

2 - PUMP STATION SITE PLANS:	DWG. NO	SHEET NO.
OVERALL SITE PLAN	SP1	7
SITE PLAN	SP2	8
GRADING PLAN	GP	9
FENCE DETAILS	F1	10
ACCESS ROAD PLAN AND PROFILE	PR1	11
ACCESS ROAD TYPICAL SECTIONS	RS1-RS3	12-14

3 - WATERLINE PLAN & PROFILE SHEETS:	DWG. NO	SHEET NO.
30" WATER PIPELINE PLAN AND PROFILES	PP1-PP15	15-29

4 - PUMP STATION ARCHITECTURAL SHEETS:		
FLOOR PLAN	A1	30
ELEVATION VIEWS	A2-A4	31-33
TYPICAL WALL SECTIONS	A5	34

5 - PUMP STATION STRUCTURAL SHEETS:	DWG. NO	SHEET NO.
FOOTING AND FOUNDATION PLAN	S1-S2	35-36
MASON WALL LAYOUT & REINFORCEMENT	S3	37
ROOF FRAMING	S4	38
MASONRY DETAILS	S5-S9	39-43

6 - MECHANICAL PIPING SHEETS:		
MECHANICAL PIPING PLAN	MP1	44
MECHANICAL PIPING ELEVATION	MP2	45
MECHANICAL PIPING SECTIONS	MP3-MP4	46-47

7 - ELECTRICAL SHEETS:	DWG. NO	SHEET NO.
ELECTRICAL GENERAL NOTES, SYMBOLS AND ABBREIAVTIONS	00E-001	48
ELECTRICAL MATERIALS, DESIGNATION, AND HAZARDOUS CLASSIFICATION	00E-002	49
AREA CLASSIFICATION, MATERIALS AND CONDUIT SCHEDULES	00E-003	50
LUMINAIRE SCHEDULE	00E-010	51
LOAD SCHEDULE	00E-100	52
GENERAL ONE-LINE DIAGRAMS	00E-110	53
GENERAL PANEL SCHEDULES	00E-120	54
MAIN CONNECTION DIAGRAM	00E-150	55
CONTROL SCHEMATICS	00E-200	56
ELECTRICAL DETAILS	00E-300 - 00E-303	57-60
NETWORK ARCHITECTURE	00E-400	61
ELECTRICAL SITE PLAN	00ES-100	62
ELECTRICAL POWER AND GROUNDING PLAN	01EP-101	63
ELECTRIC INSTRUMENTATION AND CONTROLS PLAN	01EL-101	64
ELECTRICAL LIGHTING AND RECEPTACLES	01EI-101	65
PROCESS AND INSTRUMENTATION LEGENDS AND ABBREVIATIONS	00DI-001 - 00DI-002	66-67
BOOSTER PUMP P&ID	01DI-101 - 01DI-103	68-70

8 - MECHANICAL SHEET:	DWG. NO	SHEET NO.
MECHANICAL SYMBOLS, LEGEND & SCHEDULES	M1	71
MECHANICAL DETAILS	M2	72
MECHANICAL SPECIFICATIONS	M3-M4	73-74
MECHANICAL PLAN	M5	75
MECHANICAL SECTIONS	M6-M8	76-78

9 - DETAILS		
PIPING DETAILS	D1-D5	79-83
I-80 PIPELINE CROSSING PLAN AND PROFILE	D6	84
BRIDGER PIPELINE CROSSING	D7	85
WATERLINE CONNECTIONS	D8	86
MANWAY / AIR VAC DETAILS	D9-D13	87-91
CATHODIC PROTECTION DETAILS	D14-D16	92-94
PUMP STATION HOIST DETAILS	D17	95
EROSION CONTROL DETAILS	D18	96
PUMP STATION WARNING SIGNS	D19	97
PIPELINE DETAILS	D20-D21	98-99

REV NO.	COMMENT	DATE

SUNRISE ENGINEERING
770 S WASHINGTON ST.
AFTON, WYOMING 83110
TEL 307.885.8500 · FAX 307.885.8501
www.sunrise-eng.com

GR-RS-SC JPWB

CROSSROADS PUMP STATION
AREA MAP, LOCATION MAP,
AND INDEX SHEET

SEI NO.	DESIGNED	DRAWN	CHECKED	SHEET NO.	
07265	FDK	BJ	JJL	2 of 99	G2

P:\WWDC GR-RS-SC JPWB Cross Roads Pump Station Level III (307265)\Dwg C3D\Sheets\G2-C5.dwg Feb 13, 2026 9:32am bjenkins

GENERAL LEGEND

CROSS REFERENCING	DETAIL DESIGNATION / SHEET NUMBER
NEW CONTOURS	
EXIST. CONTOURS	
EXIST. FEATURES	
NEW WATER	8"W
EXIST. WATER	8"w
EXIST. GAS	g
EXIST. TELEPHONE	t
NEW SEWER	8"S
EXIST. SEWER	8"s
EXIST. FIBER OPTIC	fo
EXIST. IRRIGATION	irr
EXIST. BURIED POWER	uge
EXIST. OVERHEAD POWER	ohe
EASMENT	
PROPERTY LINE	
NEW GATE VALVE	
EXIST. GATE VALVE	
NEW PRESSURE REDUCING VALVE	
EXIST. PRESSURE REDUCING VALVE	
NEW BLOWOFF VALVE	
EXIST. BLOWOFF VALVE	
NEW BUTTERFLY VALVE	
EXIST. BUTTERFLY VALVE	
NEW CHECK VALVE	
EXISTING CHECK VALVE	
NEW FROSTLESS YARD HYDRANT	
EXIST. FROSTLESS YARD HYDRANT	
NEW AIR RELEASE VALVE	
EXIST. AIR RELEASE VALVE	
NEW PUMP	
EXIST. PUMP	
NEW REDUCER	
EXIST. REDUCER	
NEW CROSS	
EXIST. CROSS	
NEW TEE	
EXIST. TEE	
NEW ELBOW	
EXIST. ELBOW	
NEW BEND	

EXIST. BEND	
NEW WYE	
EXIST. WYE	
NEW PLUG	
EXIST. PLUG	
NEW FLEX. COUPLING	
EXIST FLEX. COUPLING	
NEW FIRE HYDRANT	
NEW FIRE HYDRANT STUB	
EXIST. FIRE HYDRANT	
CONNECT EXIST. FIRE HYDRANT TO NEW MAIN PER	
NEW SERVICE LATERAL	
EXIST. WATER SERVICE CONN.	
NEW METER	
NEW RV WATER SERVICE	
EXIST. RV WATER SERVICE	
NEW SPRING BOX	
EXIST. SPRING BOX	
NEW GAS SERVICE CONN.	
EXIST. GAS SERVICE CONN.	
BENCH MARK	
NEW STOCK FENCE	X
EXIST. CHAINLINK FENCE	
SURFACE WATER FLOW	
POWER POLE	
NEW MANHOLE	
EXIST. MANHOLE	
SEWER MANHOLE NO.	0
NEW CLEANOUT	
EXIST. CLEANOUT	
SEWER CLEANOUT NO.	0
NEW CAP	
NEW SEWER SERVICE LATERAL	
NEW RV SEWER SERVICE	
EXIST. RV SEWER SERVICE	
THRESHOLD ELEV.	T - 0000.00
BASEMENT FLOOR ELEV.	B - 0000.00
SLOPE (PLAN VIEW)	TOP OF SLOPE / TOE OF SLOPE
SOIL TEST PIT	
EXIST. STORM SEWER INLET	OR

ABBREVIATIONS

AB	ANCHOR BOLT
ALUM.	ALUMINUM
APPROX.	APPROXIMATELY
ASSY.	ASSEMBLY
∠	ANGEL
@	AT (MEASUREMENTS)
B.F.	BLIND FLANGE
BLDG.	BUILDING
B.M.	BENCH MARK
BSC	BITUMINOUS SURFACE COURSE
B.W.	BOTH WAYS
C	CHANNEL (STRUCTURAL)
CI	CAST IRON
CFM	CUBIC FEET PER MINUTE
CFS	CUBIC FEET PER SECOND
℄	CENTER LINE
CMP	CORRUGATED METAL PIPE
CO	CLEAN OUT
CONC.	CONCRETE
CONT.	CONTINUOUS
CPLG.	COUPLING
CU. FT.	CUBIC FEET
CU. YD.	CUBIC YARD
DEG. or °	DEGREE
DET.	DETAIL
DIA. or Ø	DIAMETER
DIAG.	DIAGONAL
DIM	DIMENSION
DIP	DUCTILE IRON PIPE
DIST.	DISTRIBUTION
DWG.	DRAWING
EA.	EACH
E.F.	EACH FACE
ELB.	ELBOW
ELEV.	ELEVATION
E.W.	EACH WAY
EXIST.	EXISTING
F.G.	FINISH GRADE
FLEX.	FLEXIBLE
FLG.	FLANGE
FT or '	FEET
GA.	GAUGE
GALV.	GALVANIZED
GPM	GALLONS per MINUTE
GSP	GALVANIZED STEEL PIPE
GV	GATE VALVE
HORIZ.	HORIZONTAL
HV	HOSE VALVE
ID	INSIDE DIAMETER
IN or "	INCH
INSUL.	INSULATION
INV.	INVERT
LB. or #	POUND LINEAL FEET
LF	LINEAL FEET
LN.	LINEAL
MAX.	MAXIMUM
MECH.	MECHANICAL
MFR.	MANUFACTURER
MIN.	MINIMUM
MJ	MECHANICAL JOINT
NO. or #	NUMBER
O.C.	ON CENTER
OD	OUTSIDE DIAMETER
PE	POLYETHYLENE
PE. PIPE	POLYETHYLENE PIPE
PL.	PLATE
℘	PROPERTY LINE
PSI	POUNDS per SQUARE INCH
PVC	POLYVINYL-CHLORIDE PIPE
R	RADIUS
REM.	REMOVE
REQ'D	REQUIRED
REV.	REVISION
R/W	RIGHT-OF-WAY
RV	RECREATION VEHICLE
S	SLOPE
SPEC.	SPECIFICATION
SQ.	SQUARE
SQ. FT.	SQUARE FEET
SQ. IN.	SQUARE INCHES
STA.	STATION
STD.	STANDARD
STL.	STEEL
ST. STL	STAINLESS STEEL
TYP.	TYPICAL
W/	WITH
W/O	WITHOUT
W/REQ'D.	WHERE REQUIRED

CLEARANCE SURVEY NOTES

THE CONTRACTOR SHALL CONDUCT A PRE CONSTRUCTION CLEARANCE SURVEY FOR MIGRATORY BIRDS DURING THE AVIAN BREEDING SEASON (APRIL 15 TO JULY 31). SURVEY SHALL BE CONDUCTED BY A QUALIFIED BIOLOGIST WITH NEST SEARCHING EXPERIENCE. CONDUCT NEST SEARCHES WITHIN 72 HOURS OF DISTURBANCE FROM APRIL 10TH TO JULY 15TH. A MIGRATORY BIRD NEST CLEARANCE SURVEY IN LATE FEBRUARY AS SUGGESTED IN THE PROVIDED DOCUMENTATION WILL NOT BE EFFECTIVE AT MINIMIZING IMPACTS TO MIGRATORY BIRDS. IF A MIGRATORY BIRD NEST IS FOUND, CEASE OPERATIONS UNTIL THE BIRDS HAVE FLEDGED AND CAN LEAVE THE AREA. DEVELOPMENT OF AN APPROVED MITIGATION PLAN IN COORDINATION WITH THE U.S. FISH AND WILDLIFE SERVICE MAY ALLOW FOR SOONER INITIATION OF OPERATIONS. THE COST OF CLEARANCE SURVEYS SHALL BE BORNE BY THE CONTRACTOR.

THE WASATCH FORMATION PRESENT IN THE PROJECT AREA CAN PRODUCE SIGNIFICANT FOSSILS. ALTHOUGH MINIMAL FOSSILS WERE FOUND DURING THE PALEONTOLOGICAL CLEARANCE SURVEY, OPERATORS AND WORKERS SHOULD BE MADE AWARE OF THE POTENTIAL FOR FOSSILS. IF, AFTER THE COMMENCEMENT OF SURFACE-DISTURBING ACTIVITIES, THE BLM OR THE OPERATOR DISCOVER RESOURCES THAT WERE NOT NOTED IN THE EARLIER SURVEYS, THE OPERATOR MUST IMMEDIATELY CEASE SURFACE DISTURBING ACTIVITIES NEAR THE FIND AND NOTIFY THE BLM DISTRICT/FIELD MANAGER OF ANY POTENTIAL CULTURAL AND/OR PALEONTOLOGICAL RESOURCES ON FEDERAL LANDS THAT MIGHT BE ALTERED OR DESTROYED BY CONTINUED OPERATIONS. THE OPERATOR MUST LEAVE SUCH DISCOVERY INTACT UNTIL RECEIVING WRITTEN NOTICE TO PROCEED FROM THE DISTRICT/FIELD OFFICE. THE DISTRICT/FIELD MANAGER WILL EVALUATE THE DISCOVERIES BROUGHT TO HIS OR HER ATTENTION, TAKE ACTION TO PROTECT OR REMOVE THE RESOURCE, AND ALLOW OPERATIONS TO PROCEED WITHIN 10 WORKING DAYS AFTER NOTIFICATION TO THE DISTRICT/FIELD OFFICE OF SUCH DISCOVERY, UNLESS ALTERNATIVE ARRANGEMENTS ARE NEGOTIATED WITH THE OPERATOR. IF THE RESOURCES DISCOVERED ARE OBJECTS SUBJECT TO THE NATIVE AMERICAN GRAVES PROTECTION AND REPATRIATION ACT OF 1990 (NAGPRA), THEN OPERATIONS CAN BE SUSPENDED FOR 30 DAYS. THE ABOVE SUSPENSIONS OR DELAYS SHALL NOT CONSTITUTE CAUSE FOR ADDITIONAL CHARGES TO THE OWNER.

KINDER MORGAN OPERATES PIPELINES IN THE PROJECT AREA AND HAS ENCROACHMENT REQUIREMENTS OUTLINED IN THE BIDDING DOCUMENTS. THE CONTRACTOR SHALL COMPLY WITH THE GUIDELINES FOR DESIGN AND CONSTRUCTION NEAR KINDER MORGAN OPERATED FACILITIES INCLUDING INSURANCE REQUIREMENTS.

GENERAL NOTES

1. THE CONTRACTOR SHALL KEEP PUBLIC ROADS CLEAR OF MUD AND DEBRIS. DUST SHALL BE CONTROLLED BY WATERING.
2. ALL WORK AND ANY CHANGES TO THE WORK ARE SUBJECT TO APPROVAL BY THE JOINT POWERS WATER BOARD, AND CITY OF ROCK SPRINGS
3. ALL CONSTRUCTION WORK SHALL BE PERFORMED WITHIN EXISTING RIGHTS-OF-WAY.
4. ALL DEBRIS AND ROCK RESULTING FROM THE WORK SHALL BE DISPOSED OF BY THE CONTRACTOR. MATERIAL MUST BE DISPOSED OF AT A LOCATION ARRANGED BY THE CONTRACTOR.
5. THE PROJECT AREA HAS WATER PIPELINES, SEWER COLLECTION PIPELINES, OIL AND GAS PIPELINES, TELEPHONE LINES, STORM DRAINAGE PIPELINES, AND UNDERGROUND POWER LINES, UNDERGROUND UTILITIES, AS WELL AS SOME OVERHEAD POWER AND TELEPHONE LINES. SOME OF THESE UTILITIES HAVE BEEN SHOWN ON THIS PLAN-SET. THE CONTRACTOR HAS THE ULTIMATE RESPONSIBILITY OF LOCATING ALL UNDERGROUND AND OVERHEAD UTILITIES AND PROTECTING THEM FROM DAMAGE. ONE CALL OF WYOMING CAN BE REACHED AT 811.
6. ALL DRIVES AND ACCESSES SHALL REMAIN OPEN TO INGRESS AND EGRESS DURING CONSTRUCTION.
7. ALL PRIVATE PROPERTY SHALL BE PROTECTED FROM STORMWATER DISCHARGE DURING CONSTRUCTION.
8. FINAL GRADE OF DISTURBED AREAS IS SUBJECT TO THE ENGINEER'S APPROVAL AND IS TO BE DONE WITH NEAT WORKMANSHIP.
9. THE CONTRACTOR SHALL PREPARE AND IMPLEMENT A STORM WATER POLLUTION PREVENTION PLAN (SWPPP) IN ACCORDANCE WITH DEQ REQUIREMENTS.
10. ALL PIPELINES SHALL BE INSTALLED AT THE LOCATION AND DEPTHS REQUIRED OF THE PLANS OR AS OTHERWISE DIRECTED BY THE ENGINEER.
11. ALL EXCAVATIONS, TRENCHING, AND SHORING SHALL MEET THE REQUIREMENTS OF THE WYOMING OCCUPATIONAL HEALTH AND SAFETY COMMISSION.
12. THE CONTRACTOR SHALL PROVIDE AND MAINTAIN, AT ALL TIMES DURING CONSTRUCTION, AMPLE MEANS AND DEVICES TO PROMPTLY REMOVE ALL WATER ENTERING THE WORK, WHETHER THE WATER IS SURFACE OR GROUND WATER.
13. NOT EVERY CONDITION OR ELEMENT IS SHOWN ON THE PLANS. IT IS UNDERSTOOD THAT THE CONTRACTOR WILL USE INDUSTRY ACCEPTED STANDARD GOOD PRACTICE FOR ALL MISCELLANEOUS WORK NOT EXPLICITLY SHOWN.
14. THE CONTRACTOR SHALL BE RESPONSIBLE FOR VERIFICATION OF ALL DIMENSIONS, ELEVATIONS AND CONDITIONS THAT COULD IMPACT THE WORK. IN THE EVENT OF A DISCREPANCY OR QUESTION, THE CONTRACTOR SHALL FORWARD SAID QUESTION TO THE ENGINEER FOR CLARIFICATION.
15. THE CONTRACTOR SHALL FIELD VERIFY THE LOCATION OF THE EXISTING CONNECTING WATER LINES PRIOR TO COMMENCING ANY WATER CONSTRUCTION. SHOULD THE LOCATION DIFFER FROM THAT SHOWN ON THE PLANS, THE CONTRACTOR IS TO CONTACT THE ENGINEER FOR DIRECTION.
16. THE CONTRACTOR SHALL COMPLY WITH THE WYDOT LICENSE FOUND IN THE SPECIFICATIONS INCLUDING THE REQUIREMENTS TO FOLLOW MUTCD STANDARDS AND THE WYDOT TRAFFIC CONTROL FOR ROADWAY WORK OPERATIONS MANUAL (AVAILABLE AT: HTTPS://WWW.DOT.STATE.WY.US/HOME/ENGINEERING_TECHNICAL_PROGRAMS/MANUALS_PUBLICATIONS.HTML)
17. THERE ARE SEVERAL LOCATIONS WHERE THE PIPELINE CROSSES FENCES. FENCES SHALL BE REPLACED OR REPAIRED IN EQUAL OR BETTER CONDITION. FENCE WORK SHALL NOT BE PAID SEPARATELY AND IS CONSIDERED INCIDENTAL TO THE COST OF PIPELINE INSTALLATION. THE CONTRACTOR SHALL CONTROL AND PREVENT ESCAPE OF ANY LIVESTOCK IN THE WORK AREA AND PROTECT OPEN TRENCHES FROM ENTRY BY LIVESTOCK.
18. BUILDING CONSTRUCTION TO BE PERMITTED AND INSPECTED BY CITY OF ROCK SPRINGS BUILDING OFFICIAL.

    SNOW LOAD = 30PSF.
    WIND = 115 MPH EXPOSURE C
    UBC ZONE 1
    SEISMIC CATEGORY B.
    28-DAY CONCRETE STRENGTH 4,000 PSI (TYPE V CEMENT)
19. THE CONTRACTOR SHALL VERIFY THE ELEVATION OF CROSSING UTILITIES AHEAD OF PIPELINE PROGRESS BY HYDRO VAC EXCAVATION AND ADJUST GRADE OF PIPELINE TO ALLOW CLEARANCE TO PASS UNDER THE INTERSECTING UTILITY.

REV NO.	COMMENT	DATE

SUNRISE ENGINEERING
770 S WASHINGTON ST.
AFTON, WYOMING 83110
TEL 307.885.8500 · FAX 307.885.8501
www.sunrise-eng.com

GR-RS-SC JPWB

CROSSROADS PUMP STATION

ABBREVATIONS AND LEGEND

SEI NO.	DESIGNED	DRAWN	CHECKED	SHEET NO.	
07265	FDK	BJ	JJL	3 of 99	G3

P:\WMDC GR-RS-SC JPWB Cross Roads Pump Station Level III (S07265)\Dwg C3D\Sheets\G2-G5.dwg Feb 13, 2026 9:32am bjenkins

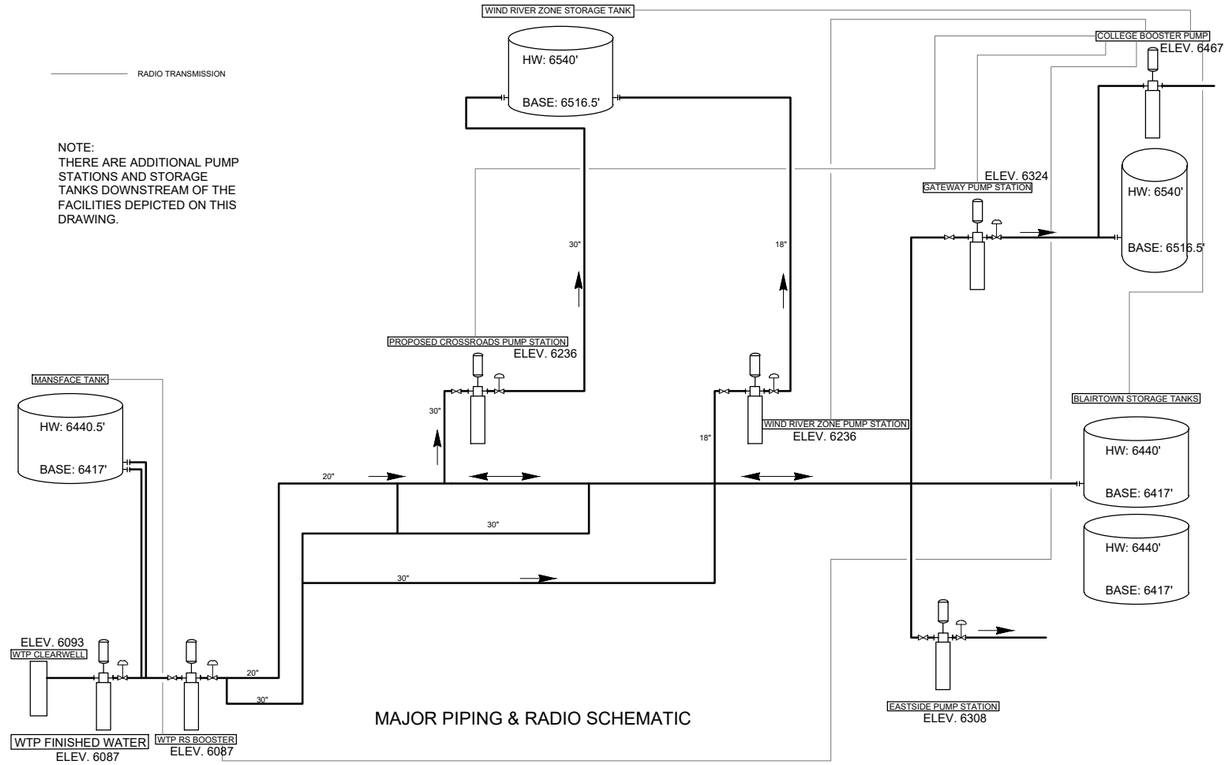

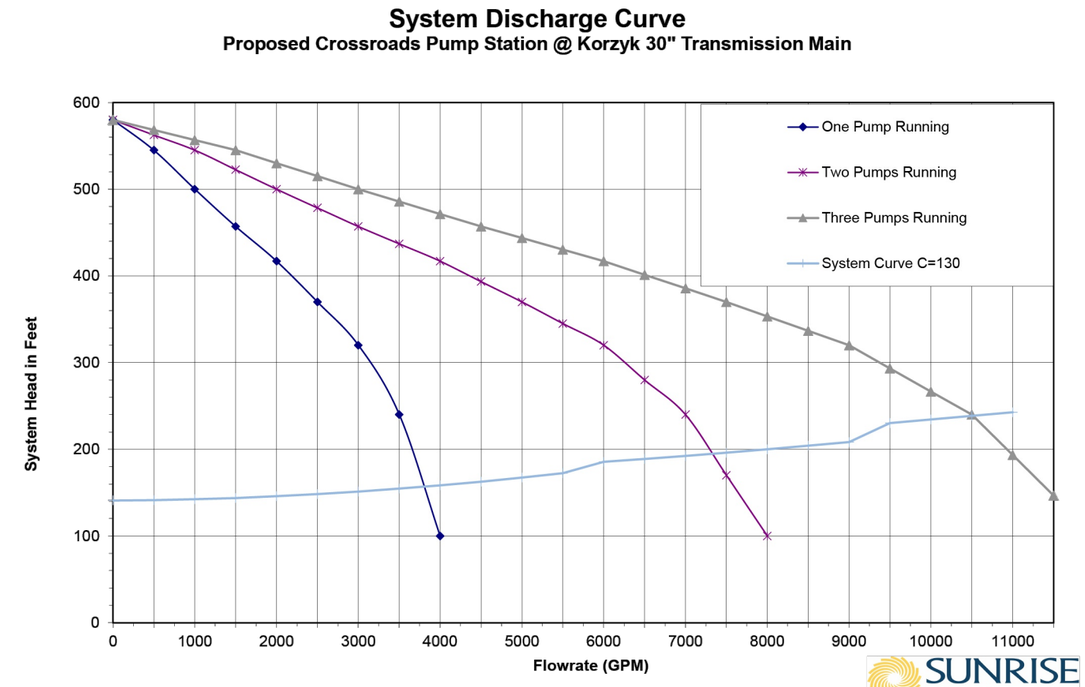

SUNRISE ENGINEERING

Crossroads Pump Station Level III - Detail Design

Design Criteria*

2020 Conditions

Average Day Station Flow	5,376,000	Million Gallons
Peak Day Station Flow	7,527,000	Million Gallons
Peak Day Flow Rate	5,230	Gallons Per Minute

2060 Conditions

Average Day Station Flow	10,433,000	Million Gallons
Peak Day Station Flow	14,606,000	Million Gallons
Peak Flow Rate	10,150	Gallons Per Minute

Pump Station Floor Elevation	6,236	
Pump Volute Elevation	6,231	
Discharge Elevation (Wind River Tank High Water)	6,540 Max	6,517 Min
Static Discharge Pressure At Pump	309 Feet Max	285.5 Feet Min
Static Suction Pressure at Pump	210 Feet Max	188 Feet Min
Discharge Pipe Length	13,450 Feet	
Discharge Pipe Diameter	30 Inches	

Number of Pumps	4
Stages Per Pump	5
Max HP Per Pump	270

Pump Capacity (5 Stages Per Pump)		Flow Per Pump	Net Dynamic Discharge Head (ft)	Dynamic Suction Head (ft)	NPSH Required (ft)
One Pump Running	3,700gpm	3,700gpm	156	162	40
Two Pumps Running	7,300gpm	3,650gpm	195	138	32
Three Pumps Running	10,500gpm	3,500gpm	239	113	25

REV NO.	COMMENT	DATE

SUNRISE ENGINEERING
770 S WASHINGTON ST.
AFTON, WYOMING 83110
TEL 307.885.8500 · FAX 307.885.8501
www.sunrise-eng.com

GR-RS-SC JPWB

CROSSROADS PUMP STATION

DESIGN CRITERIA & PUMP CURVE

SEI NO.	DESIGNED	DRAWN	CHECKED	SHEET NO.	
07265	FDK	BJ	JJL	4 of 99	G4

P:\WWDC GR-RS-SC JPWB Cross Roads Pump Station Level III (507265)\Dwg C3D\Sheets\G2-G5.dwg Feb 13, 2026 9:32am bjenkins

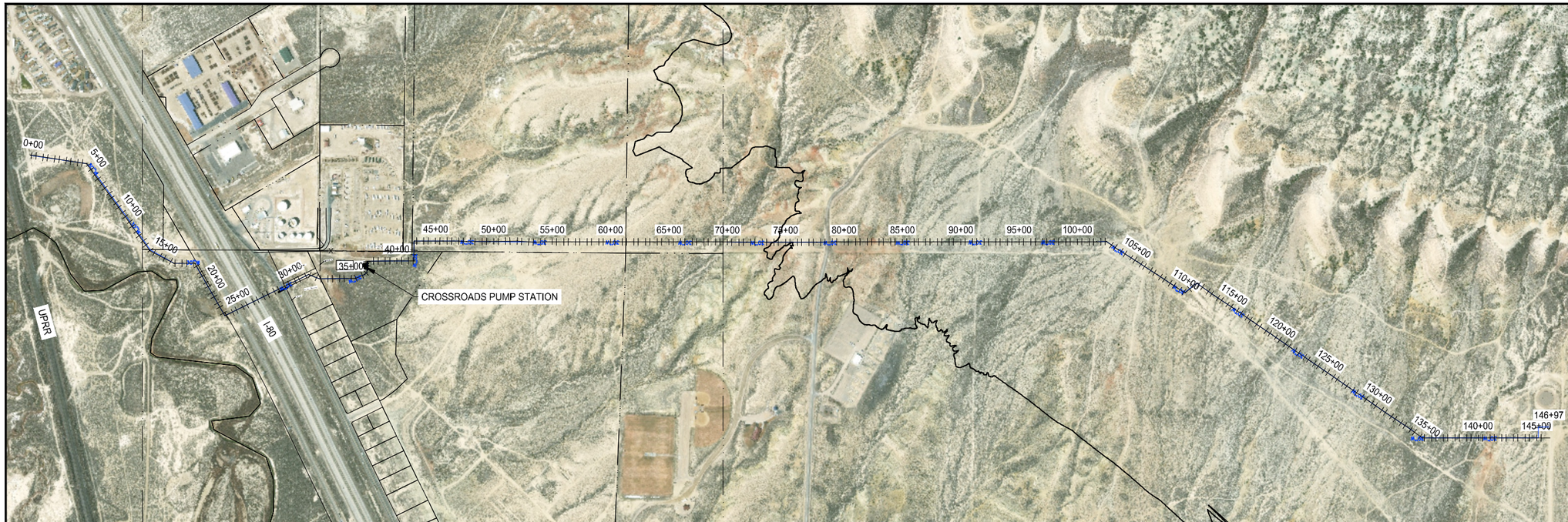

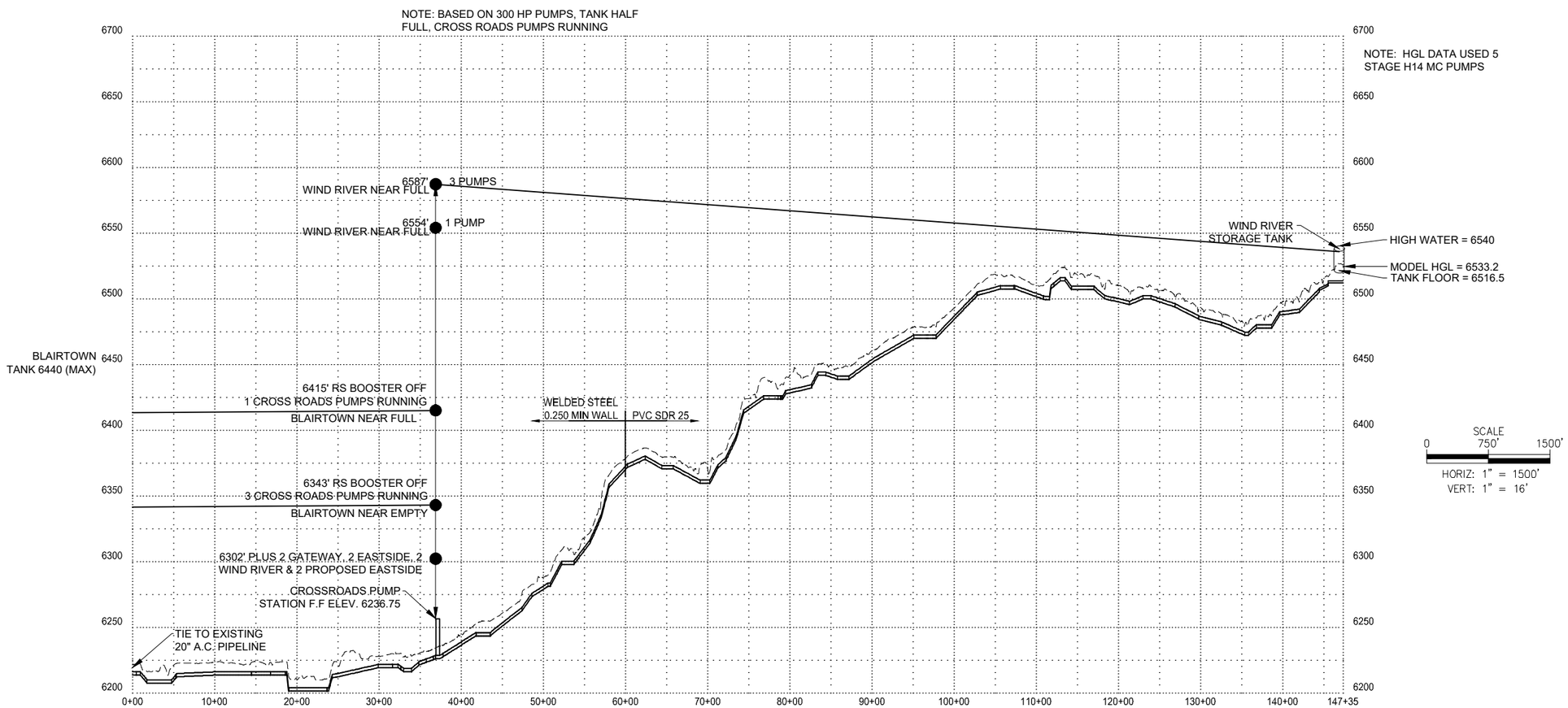

SCALE
0 1000' 2000'
HORIZ: 1" = 1000'

SCALE
0 750' 1500'
HORIZ: 1" = 1500'
VERT: 1" = 16'

REV NO.	COMMENT	DATE

SUNRISE ENGINEERING
770 S WASHINGTON ST.
AFTON, WYOMING 83110
TEL 307.885.8500 · FAX 307.885.8501
www.sunrise-eng.com

GR-RS-SC JPWB

CROSSROADS PUMP STATION

HYDRAULIC GRADE PROFILE

SEI NO.	DESIGNED	DRAWN	CHECKED	SHEET NO.	
07265	FDK	BJ	JJL	5 of 99	HP

P:\WWDC GR-RS-SC JPWB Cross Roads Pump Station Level III (S07265)\Dwg C3D\Civil\Waterline\Plan & Profile\Complete Profile.dwg Feb 13, 2026 9:33am bjenkins

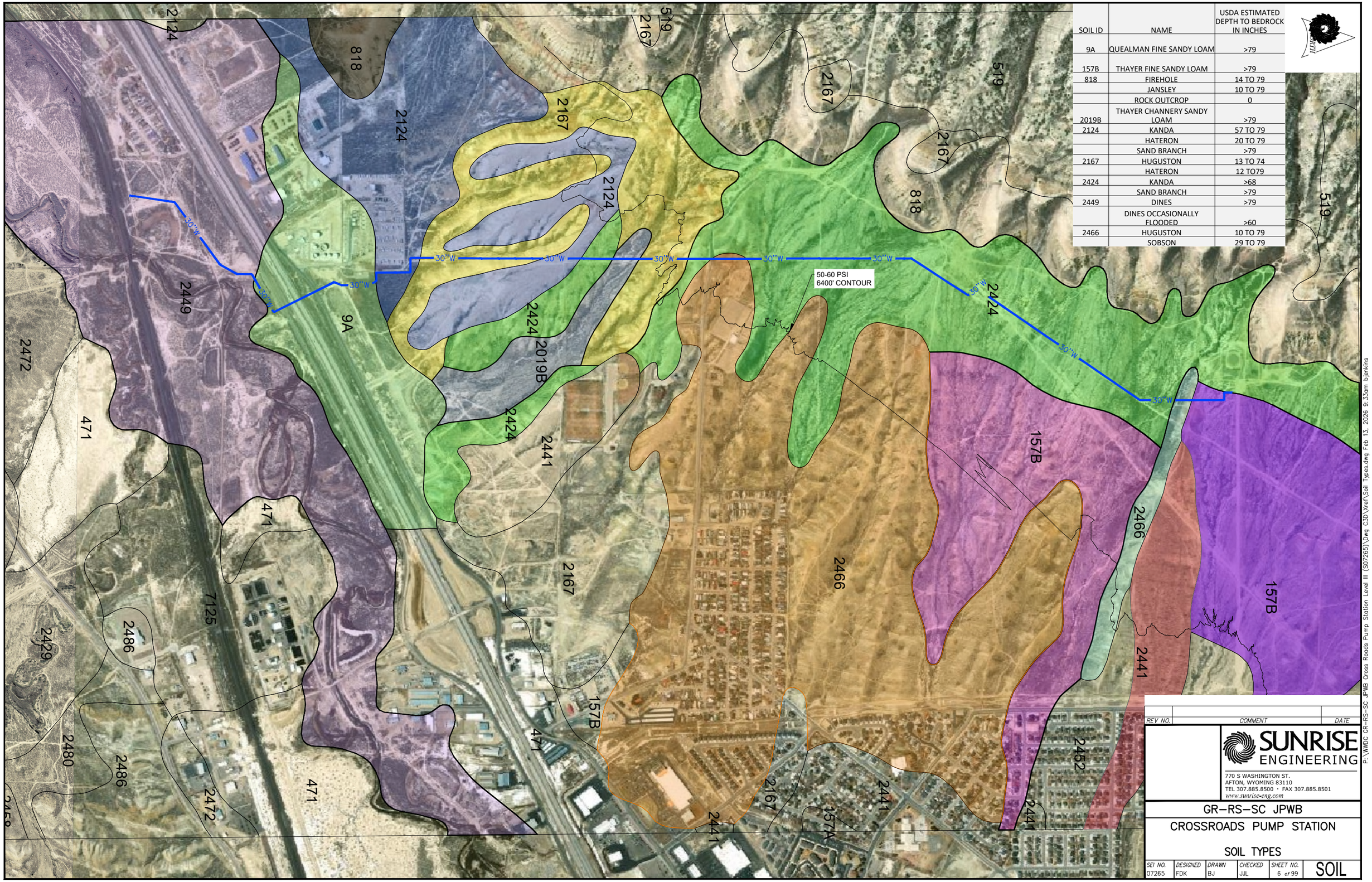

SOIL ID	NAME	USDA ESTIMATED DEPTH TO BEDROCK IN INCHES
9A	QUEALMAN FINE SANDY LOAM	>79
157B	THAYER FINE SANDY LOAM	>79
818	FIREHOLE	14 TO 79
	JANSLEY	10 TO 79
	ROCK OUTCROP	0
2019B	THAYER CHANNERY SANDY LOAM	>79
2124	KANDA	57 TO 79
	HATERON	20 TO 79
	SAND BRANCH	>79
2167	HUGUSTON	13 TO 74
	HATERON	12 TO79
2424	KANDA	>68
	SAND BRANCH	>79
2449	DINES	>79
	DINES OCCASIONALLY FLOODED	>60
2466	HUGUSTON	10 TO 79
	SOBSON	29 TO 79

REV NO.	COMMENT	DATE

SUNRISE ENGINEERING
770 S WASHINGTON ST.
AFTON, WYOMING 83110
TEL 307.885.8500 · FAX 307.885.8501
www.sunrise-eng.com

GR-RS-SC JPWB

CROSSROADS PUMP STATION

SOIL TYPES

SEI NO.	DESIGNED	DRAWN	CHECKED	SHEET NO.	
07265	FDK	BJ	JJL	6 of 99	SOIL

P:\WDC GR-RS-SC JPWB Cross Roads Pump Station Level III (S07265)\Dwg C3D\Xref\Soil Types.dwg Feb 13, 2026 9:33am bjenkins

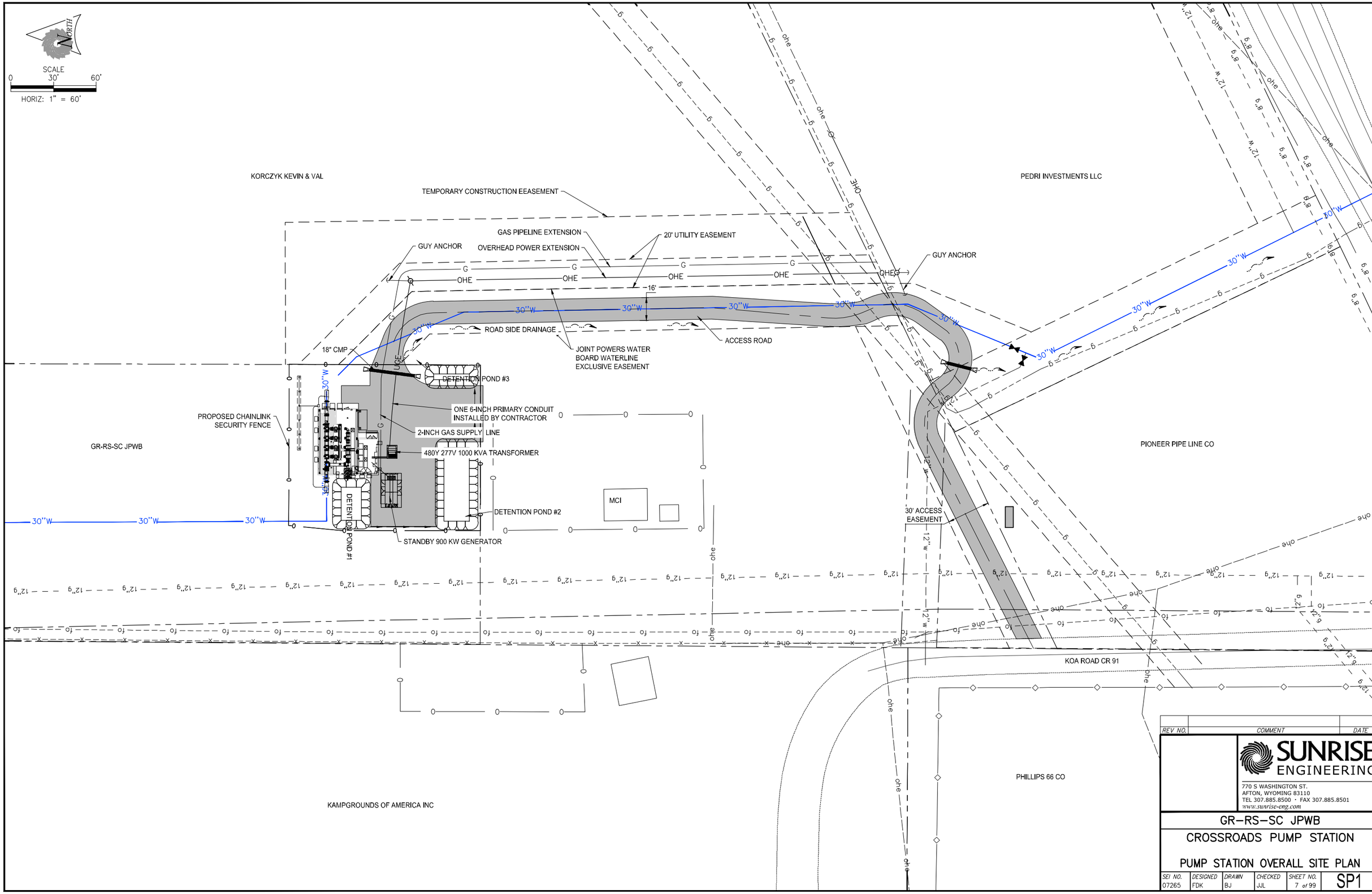

REV NO.	COMMENT	DATE

SUNRISE ENGINEERING
770 S WASHINGTON ST.
AFTON, WYOMING 83110
TEL 307.885.8500 · FAX 307.885.8501
www.sunrise-eng.com

GR-RS-SC JPWB

CROSSROADS PUMP STATION

PUMP STATION OVERALL SITE PLAN

SEI NO.	DESIGNED	DRAWN	CHECKED	SHEET NO.	
07265	FDK	BJ	JJL	7 of 99	SP1

P:\WWDC GR-RS-SC JPWB Cross Roads Pump Station Level III (S07265)\Dwg C3D\Civil\Site Plan\Pump Station Site Plan.dwg Feb 13, 2026 9:33am bjenkins

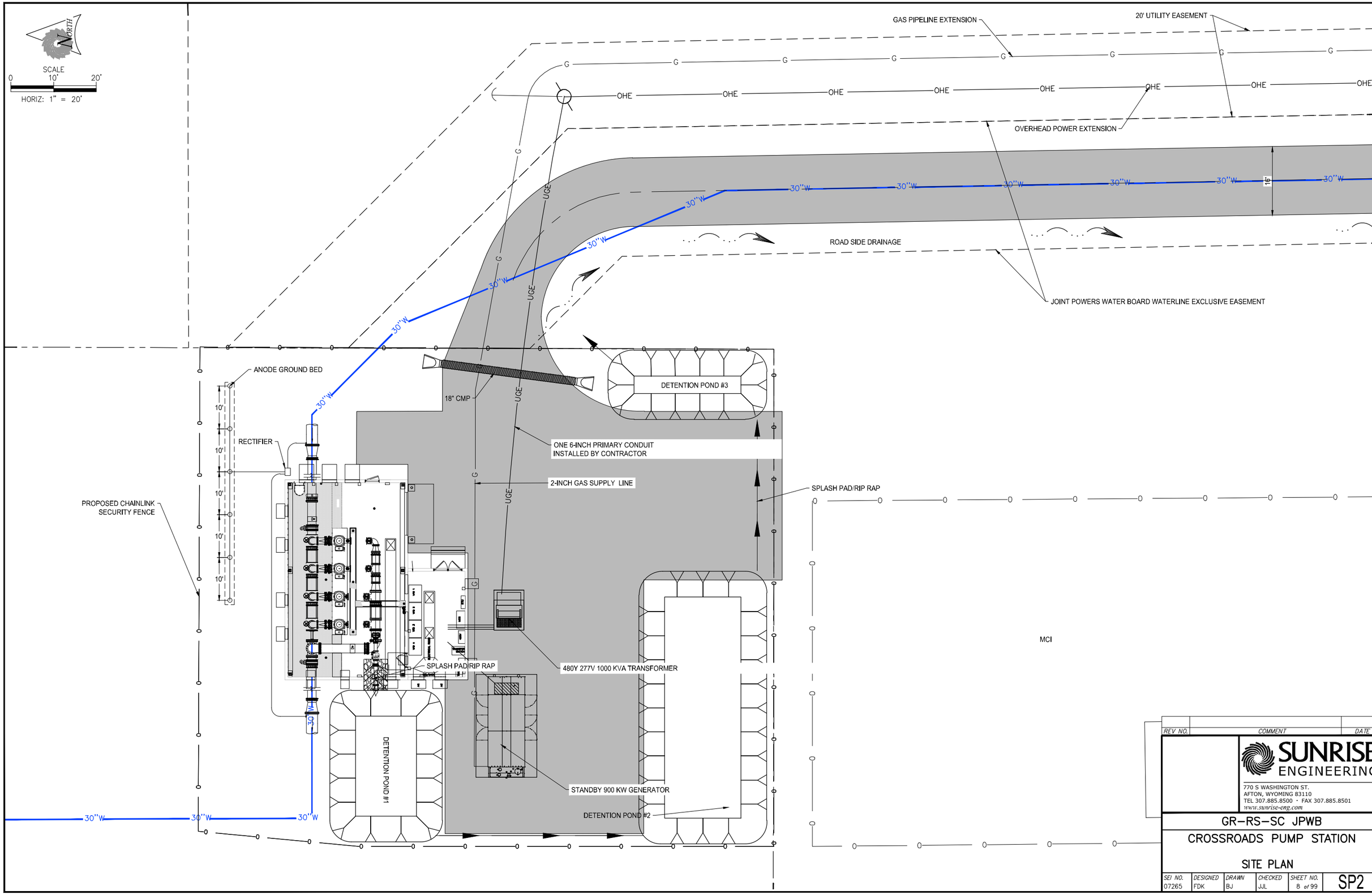

REV NO.	COMMENT	DATE

SUNRISE ENGINEERING
770 S WASHINGTON ST.
AFTON, WYOMING 83110
TEL 307.885.8500 · FAX 307.885.8501
www.sunrise-eng.com

GR-RS-SC JPWB

CROSSROADS PUMP STATION

SITE PLAN

SEI NO.	DESIGNED	DRAWN	CHECKED	SHEET NO.	
07265	FDK	BJ	JJL	8 of 99	SP2

P:\WWDC GR-RS-SC JPWB Cross Roads Pump Station Level III (S07265)\Dwg C3D\Civil\Site Plan\Pump Station Site Plan.dwg Feb 13, 2026 9:33am bjenkins

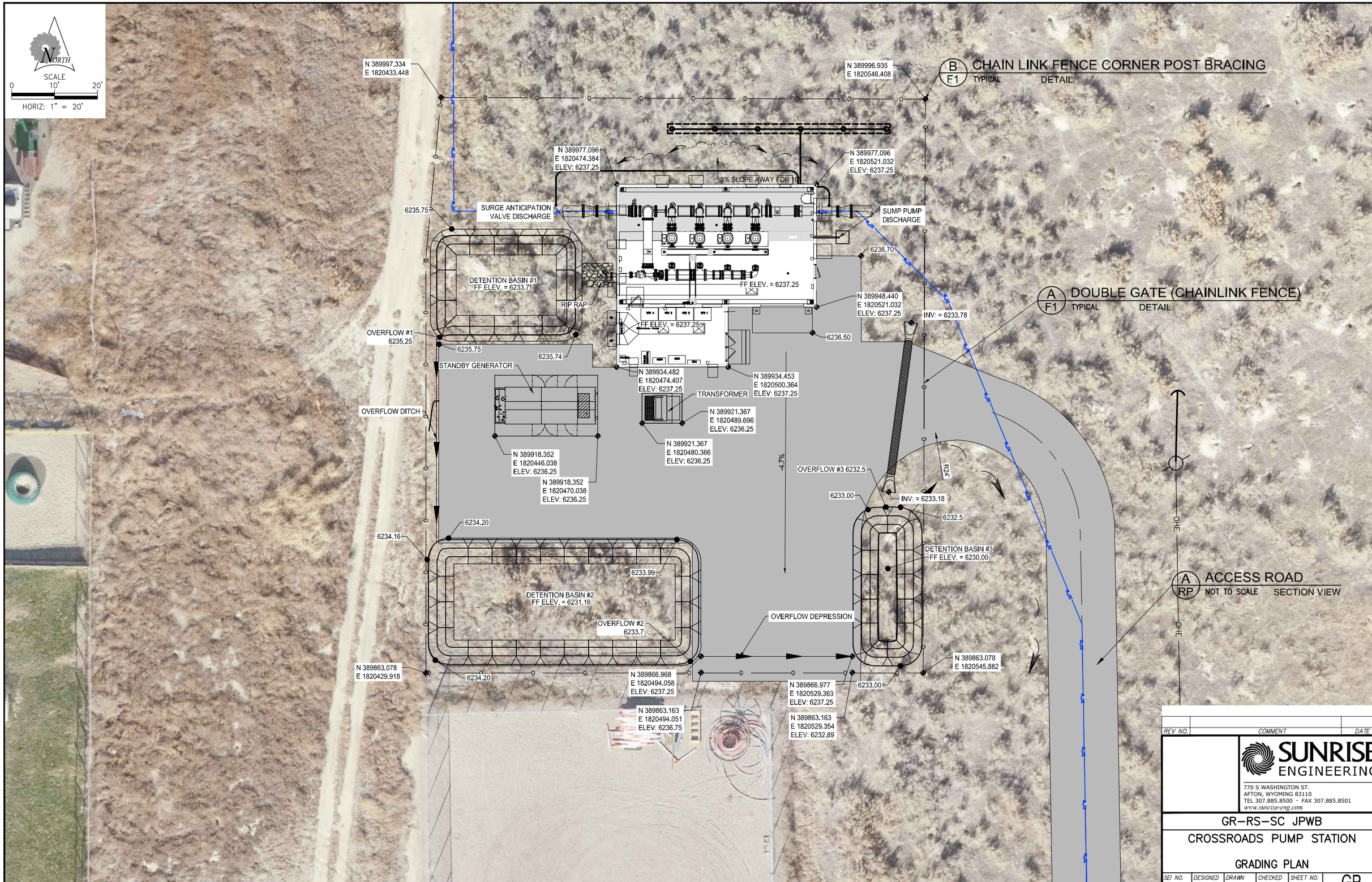

REV NO.	COMMENT	DATE

SUNRISE ENGINEERING
770 S WASHINGTON ST.
AFTON, WYOMING 83110
TEL 307.885.8500 · FAX 307.885.8501
www.sunrise-eng.com

GR-RS-SC JPWB

CROSSROADS PUMP STATION

GRADING PLAN

SEI NO.	DESIGNED	DRAWN	CHECKED	SHEET NO.	
07265	FDK	BJ	JJL	9 of 99	GP

P:\WMDC GR-RS-SC JPWB Cross Roads Pump Station Level III (S07265)\Dwg C3D\Civil\Site Plan\Pump Station Site Plan Grading.dwg Feb 13, 2026 9:33am bjenkins

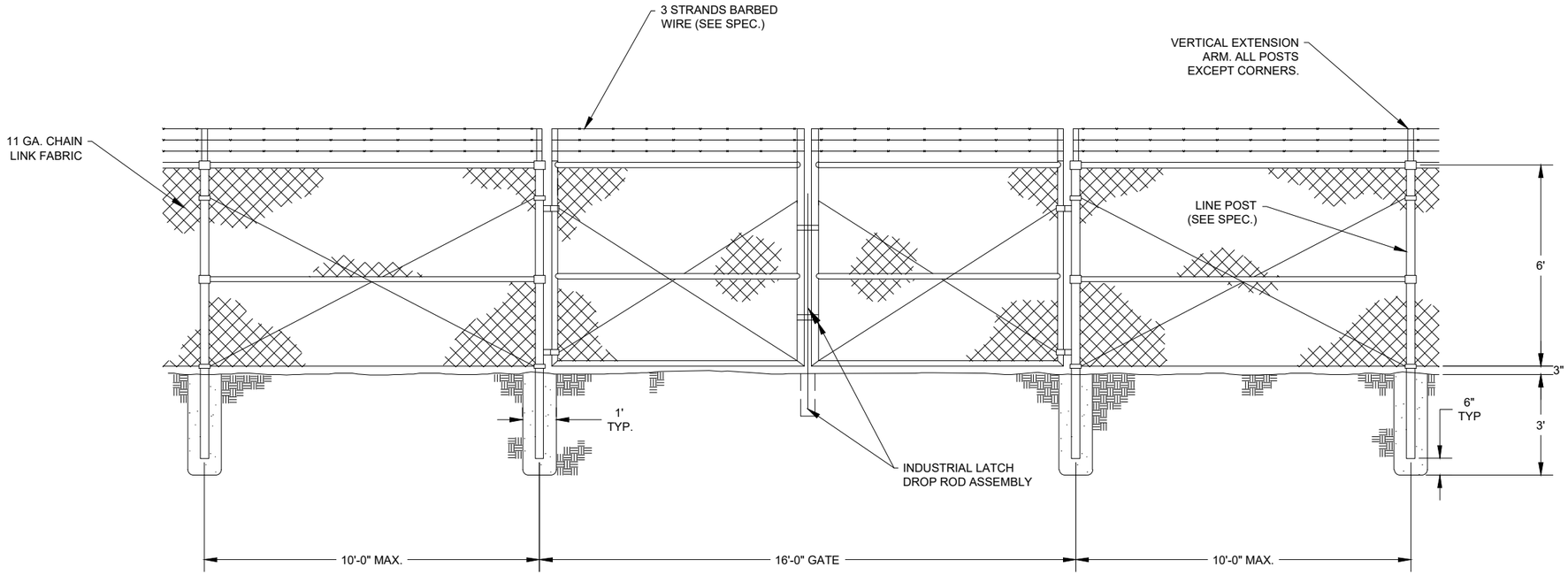

NOTE:
PROVIDE GATE KEEPER WITH EACH GATE.

A ~ DOUBLE GATE (CHAINLINK FENCE)
TYPICAL DETAIL

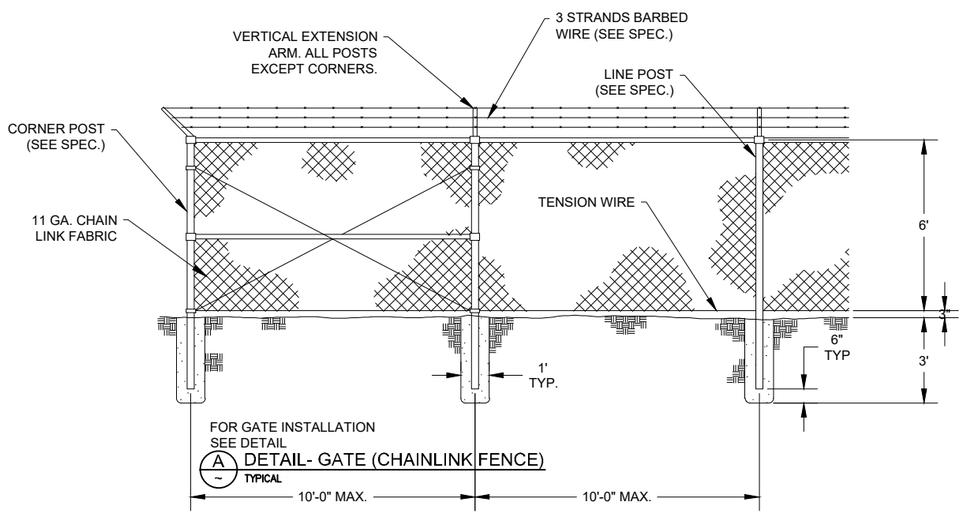

B ~ CHAIN LINK FENCE CORNER POST BRACING
TYPICAL DETAIL

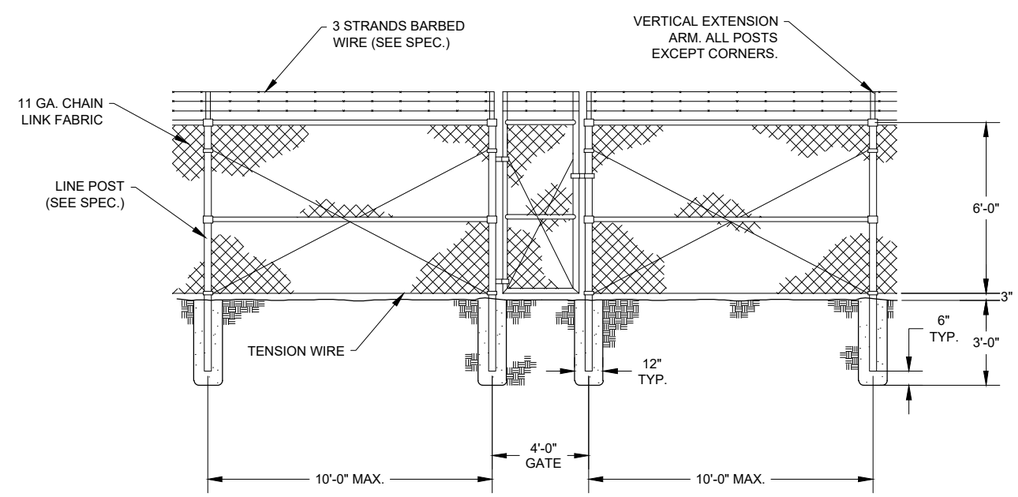

C ~ WALK-IN GATE (CHAINLINK FENCE)
TYPICAL DETAIL

REV NO.	COMMENT	DATE

SUNRISE ENGINEERING
770 S WASHINGTON ST.
AFTON, WYOMING 83110
TEL 307.885.8500 · FAX 307.885.8501
www.sunrise-eng.com

GR–RS–SC JPWB

CROSSROADS PUMP STATION

FENCE DETAILS

SEI NO.	DESIGNED	DRAWN	CHECKED	SHEET NO.	
07265	FDK	BJ	JJL	10 of 99	F1

P:\WWDC GR-RS-SC JPWB Cross Roads Pump Station Level III (507265)\Dwg C3D\Pump Station\Details\Building Details.dwg Feb 13, 2026 9:33am bjenkins

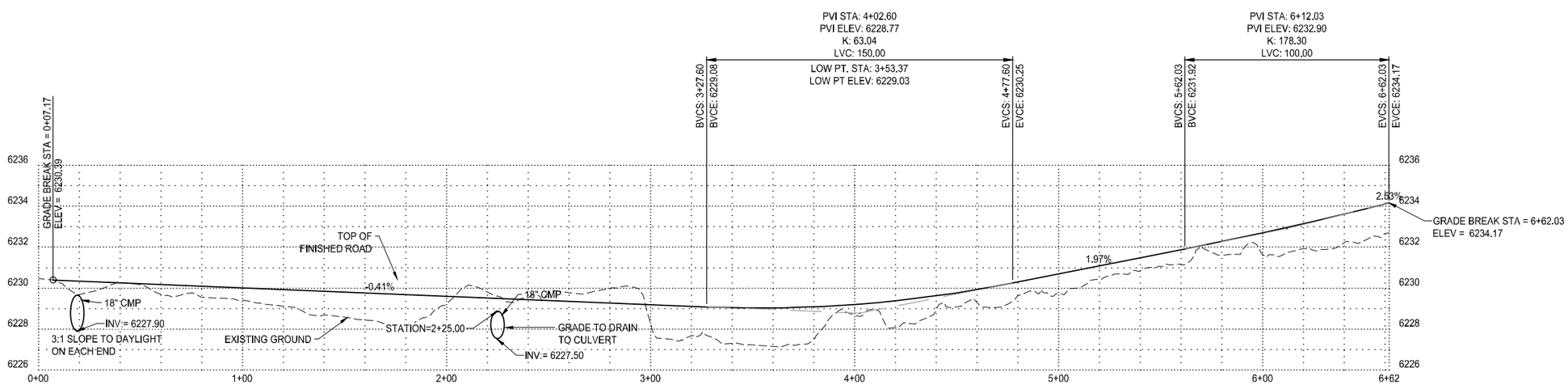

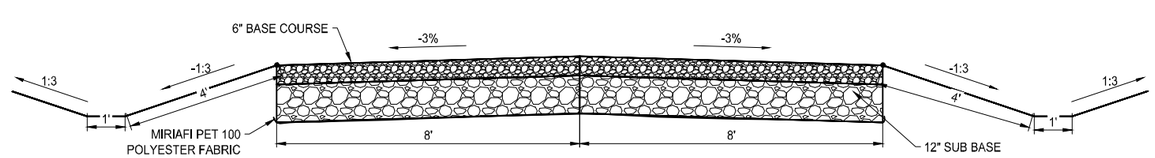

B ~ ACCESS ROAD
NOT TO SCALE SECTION VIEW

NORTH

SCALE
0 30' 60'
HORIZ: 1" = 60'

811 Know what's below. Call before you dig. 1-800-849-2476

REV NO.	COMMENT	DATE

SUNRISE ENGINEERING
770 S WASHINGTON ST.
AFTON, WYOMING 83110
TEL 307.885.8500 · FAX 307.885.8501
www.sunrise-eng.com

GR–RS–SC JPWB

CROSSROADS PUMP STATION
ACCESS ROAD
PLAN AND PROFILE

SEI NO.	DESIGNED	DRAWN	CHECKED	SHEET NO.	
07265	FDK	BJ	JJL	11 of 99	RP

P:\WMDC GR-RS-SC JPWB Cross Roads Pump Station Level III (S07265)\Dwg C3D\Civil\Site Plan\Access Road.dwg Feb 13, 2026 9:33am bjenkins

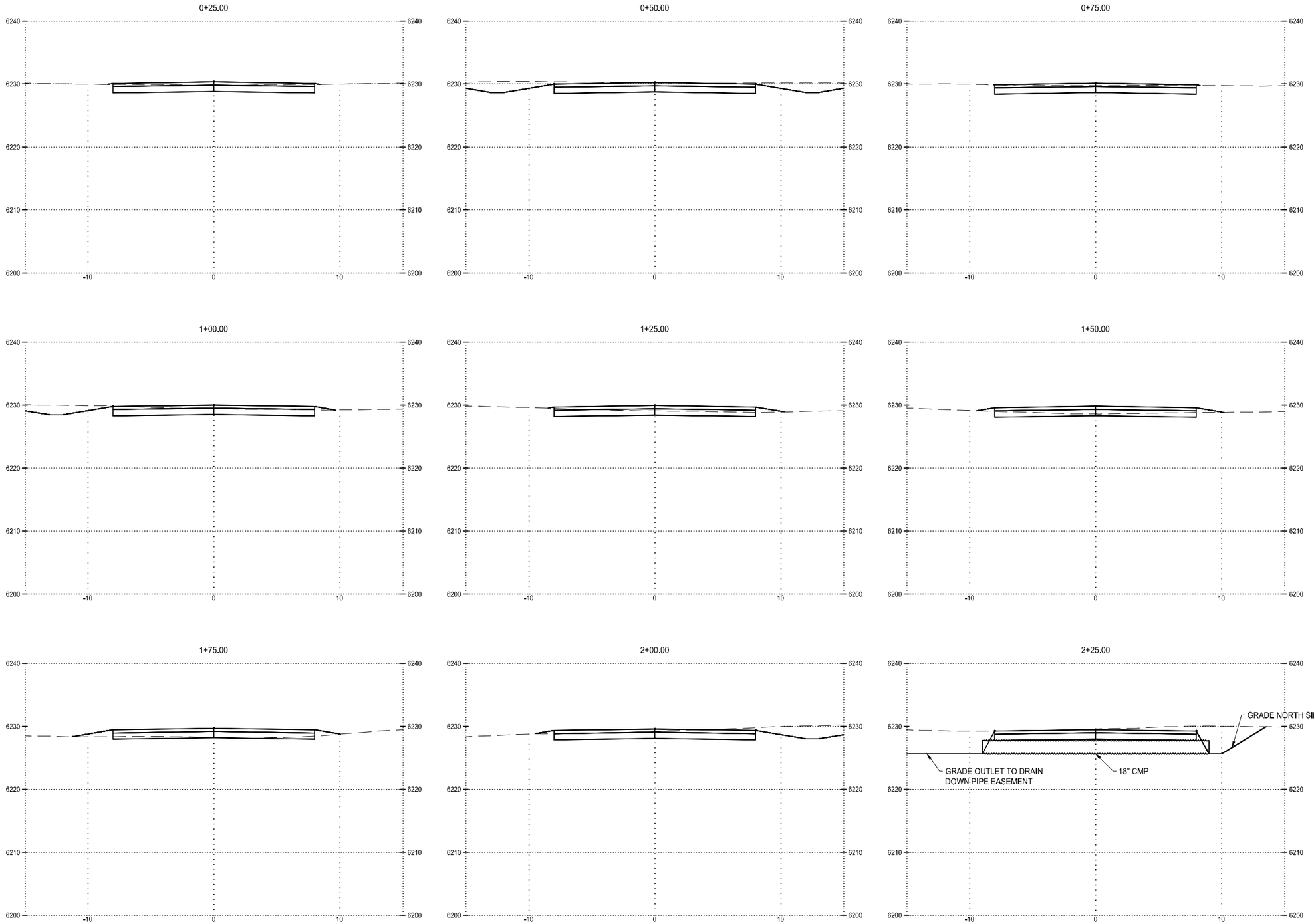

REV NO.	COMMENT	DATE

SUNRISE ENGINEERING
770 S WASHINGTON ST.
AFTON, WYOMING 83110
TEL 307.885.8500 · FAX 307.885.8501
www.sunrise-eng.com

GR–RS–SC JPWB

CROSSROADS PUMP STATION
ACCESS ROAD
SECTIONS

SEI NO.	DESIGNED	DRAWN	CHECKED	SHEET NO.	
07265	FDK	BJ	JJL	12 of 99	RS1

P:\WWDC GR-RS-SC JPWB Cross Roads Pump Station Level III (S07265)\Dwg C3D\Civil\Site Plan\Access Road.dwg Feb 13, 2026 9:33am bjenkins

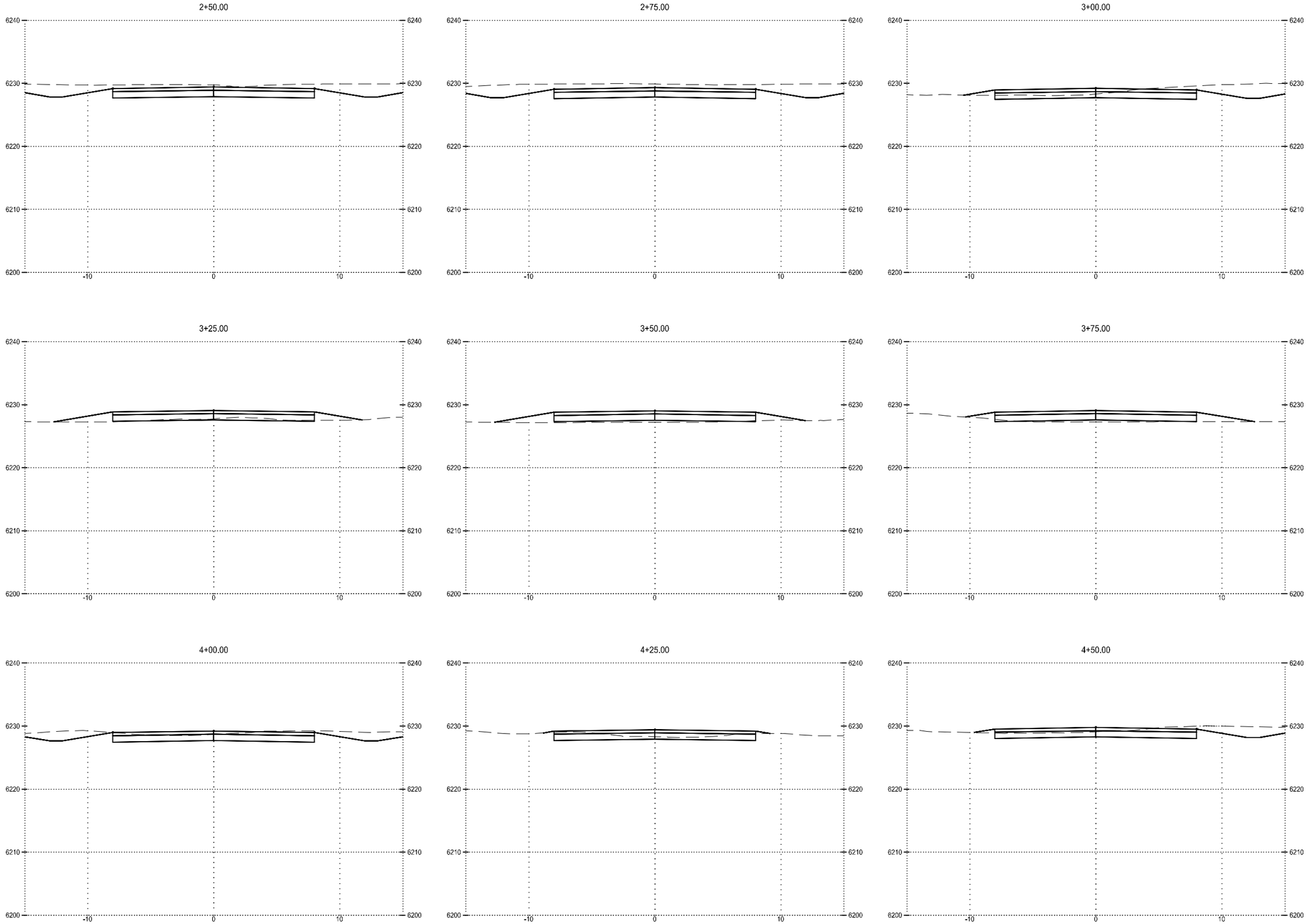

REV NO.	COMMENT	DATE

SUNRISE ENGINEERING
770 S WASHINGTON ST.
AFTON, WYOMING 83110
TEL 307.885.8500 - FAX 307.885.8501
www.sunrise-eng.com

GR-RS-SC JPWB

CROSSROADS PUMP STATION
ACCESS ROAD
SECTIONS

SEI NO.	DESIGNED	DRAWN	CHECKED	SHEET NO.	
07265	FDK	BJ	JJL	13 of 99	RS2

P:\WWDC GR-RS-SC JPWB Cross Roads Pump Station Level III (S07265)\Dwg C3D\Civil\Site Plan\Access Road.dwg Feb 13, 2026 9:33am bjenkins

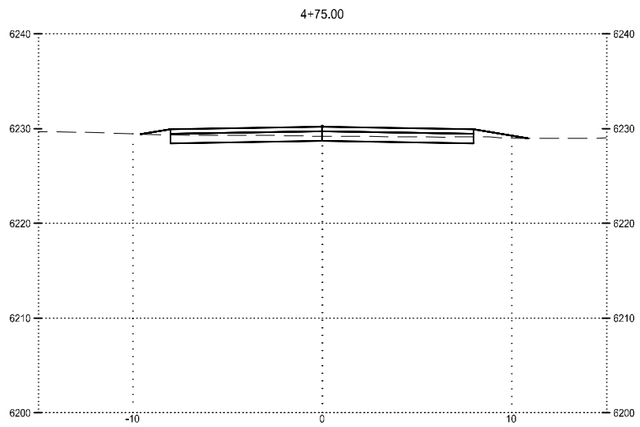

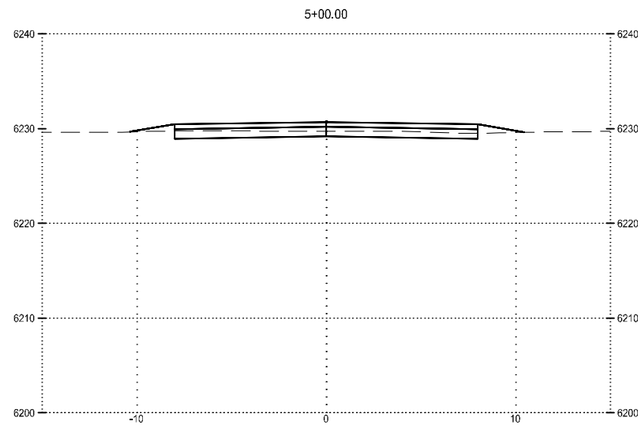

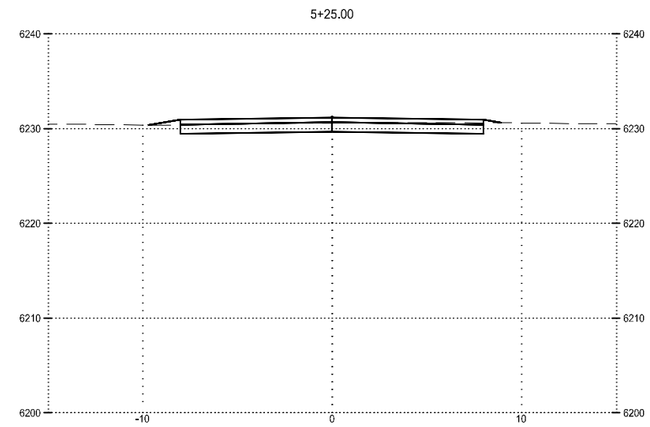

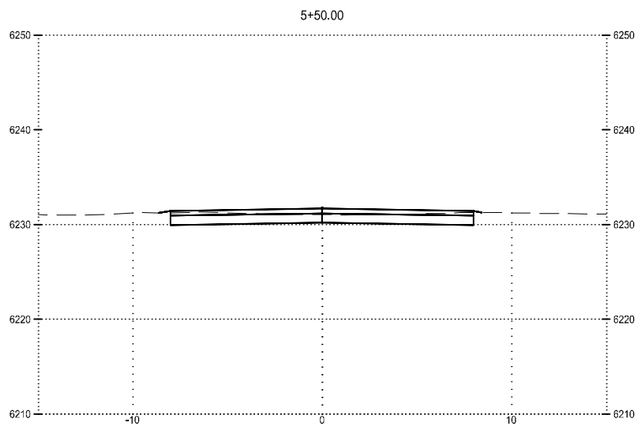

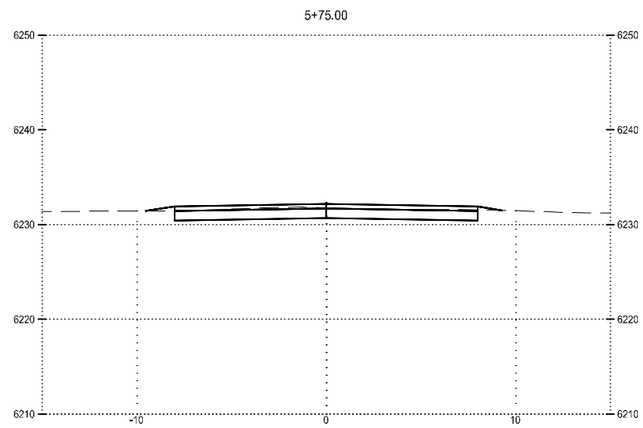

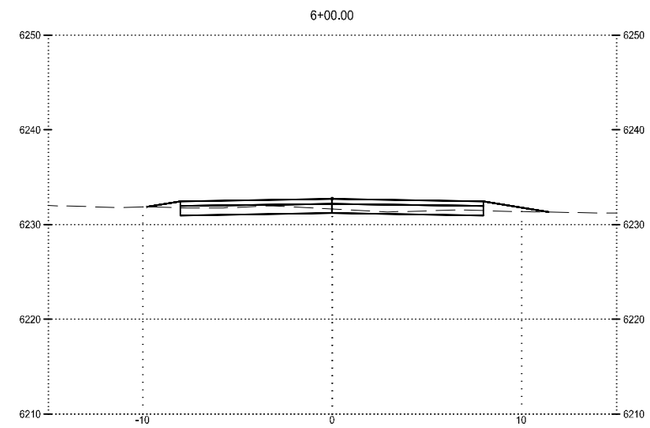

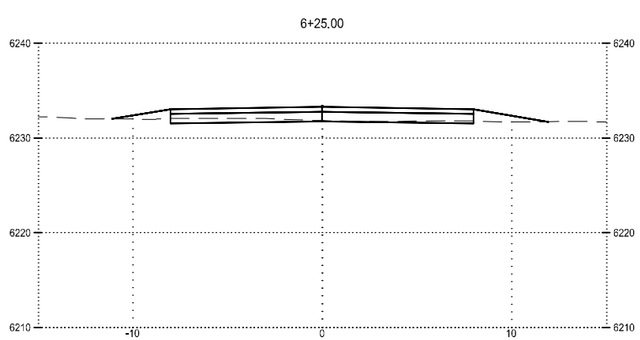

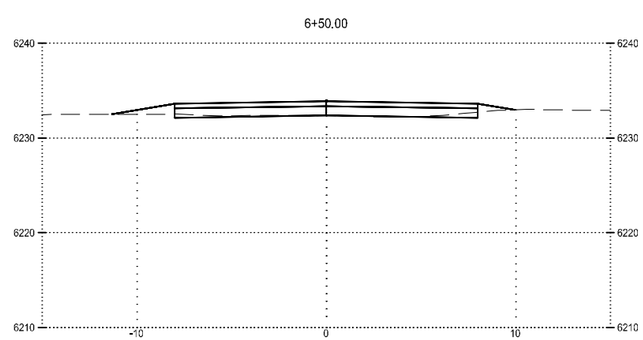

REV NO.	COMMENT	DATE

SUNRISE ENGINEERING
770 S WASHINGTON ST.
AFTON, WYOMING 83110
TEL 307.885.8500 · FAX 307.885.8501
www.sunrise-eng.com

GR–RS–SC JPWB

CROSSROADS PUMP STATION
ACCESS ROAD
SECTIONS

SEI NO.	DESIGNED	DRAWN	CHECKED	SHEET NO.	
07265	FDK	BJ	JJL	14 of 99	RS3

P:\WWDC GR-RS-SC JPWB Cross Roads Pump Station Level III (S07265)\Dwg C3D\Civil\Site Plan\Access Road.dwg Feb 13, 2026 9:33am bjenkins

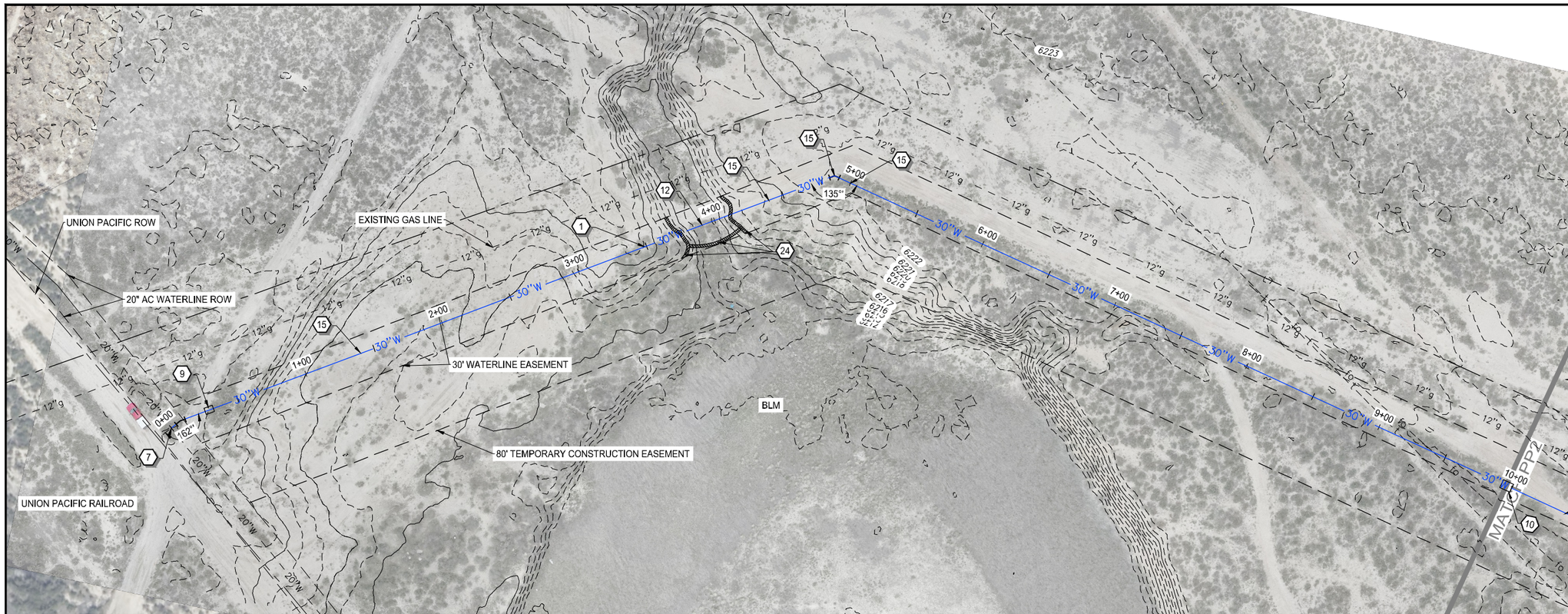

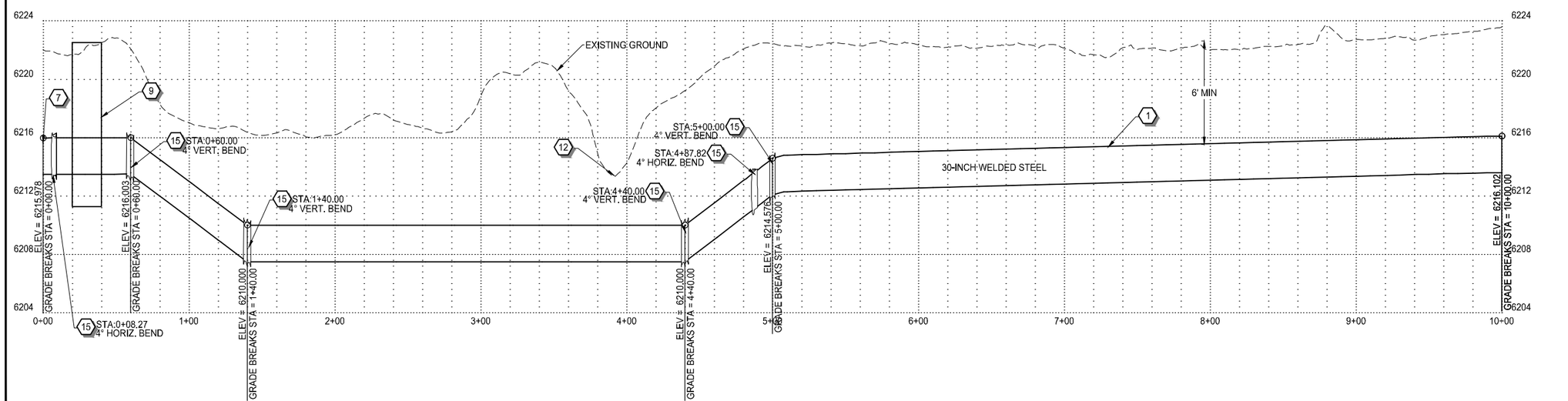

WATERLINE NOTES:

1. NEW 30" WATERLINE PER A/D2 B/D2
2. CONNECT TO EXISTING 12" WATERLINE PER C/D8 D/D8 E/D8
3. BEND (90°, 45°, 221/2°, ETC.) WITH THRUST BLOCK. A/D3
4. BUTTERLY VALVE PER C/D2
5. BLOWOFF ASSEMBLY PER C/D4
6. TEE WITH THRUST BLOCK PER A/D3
7. CONNECT TO EXISTING 20" WATERLINE PER A/D1
8. MANWAY WITH AIR\VAC PER A/D9 C/D12
9. MANWAY WITH AIR RELEASE PER A/D11 A/D13
10. MANWAY PER A/D16 A/D19
11. AIR\VAC VALVE PER C/D16 C/D12
12. EPHEMERAL WASH CROSSING PER A/D4
13. CONNECT TO EXISTING 18" WATERLINE PER A/D8
14. CLAY CUT-OFF WALL PER A/D5
15. 2-PIECE BEND A/D3
16. 3-PIECE BEND A/D3
17. JIM BRIDGER PIPELINE CROSSING A/D7 B/D7
18. GATE VALVE PER DETAIL D/D2
19. WEAK SOILS CROSSING E/D1
20. CONCRETE PIPELINE ANCHOR D/D13
21. 30"x12" CROSS WITH THRUST BLOCK PER A/D3
22. CHECK VALVE VAULT A/D8 B/D8
23. EROSION BLANKET PER F/D18 G/D18
24. SEDIMENT LOG/WATTLE PER A/D18 B/D18
25. FIRE HYDRANT PER F/D5

NORTH

SCALE
0 40' 80'
HORIZ: 1" = 80'

811 Know what's below. Call before you dig. 1-800-849-2476

REV NO.	COMMENT	DATE

SUNRISE ENGINEERING
770 S WASHINGTON ST.
AFTON, WYOMING 83110
TEL 307.885.8500 · FAX 307.885.8501
www.sunrise-eng.com

GR-RS-SC JPWB

CROSSROADS PUMP STATION

PLAN AND PROFILE

SEI NO.	DESIGNED	DRAWN	CHECKED	SHEET NO.	
07265	FDK	BJ	JJL	15 of 99	PP1

P:\WWDC GR-RS-SC JPWB Cross Roads Pump Station Level III (S07265)\Dwg C3D\Sheets\Plan & Profile1.dwg Feb 13, 2026 @ 9:34am bjenkins

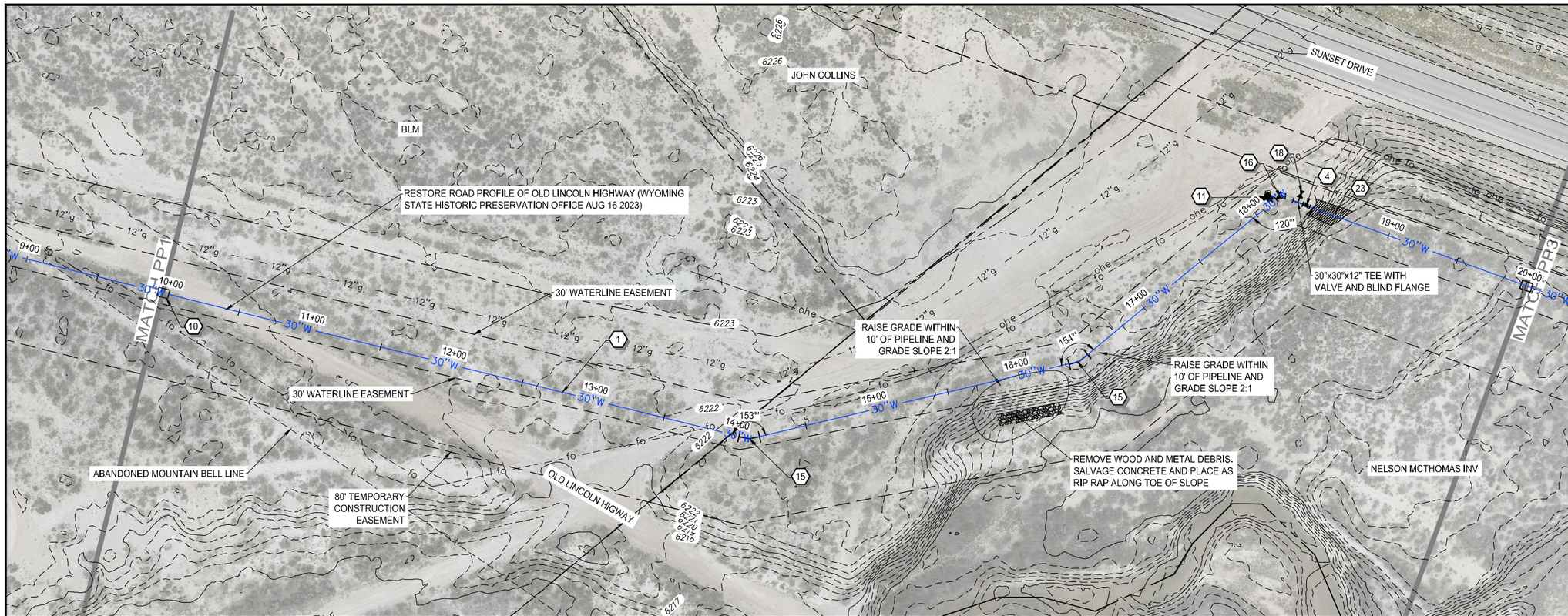

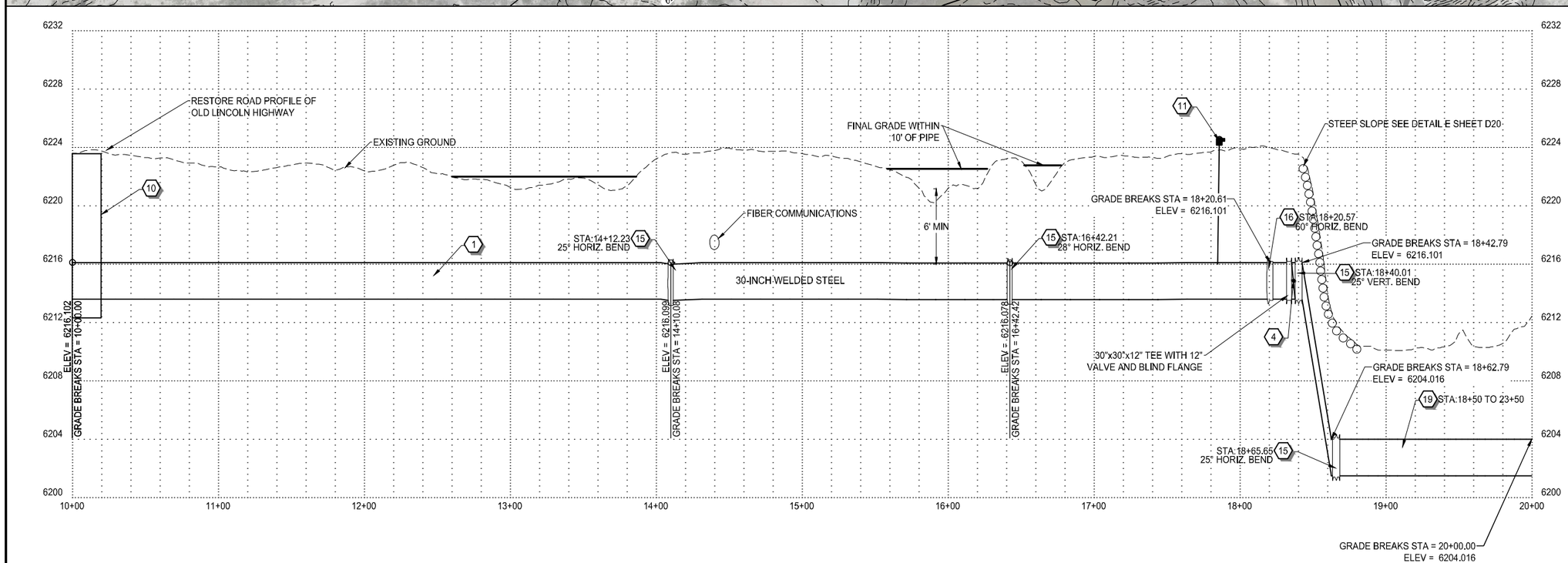

WATERLINE NOTES:

1. NEW 30" WATERLINE PER A/D2 B/D2
2. CONNECT TO EXISTING 12" WATERLINE PER C/D8 D/D8 E/D8
3. BEND (90°, 45°, 221/2°, ETC.) WITH THRUST BLOCK. A/D3
4. BUTTERLY VALVE PER C/D2
5. BLOWOFF ASSEMBLY PER C/D4
6. TEE WITH THRUST BLOCK PER A/D3
7. CONNECT TO EXISTING 20" WATERLINE PER A/D1
8. MANWAY WITH AIR\VAC PER A/D9 C/D12
9. MANWAY WITH AIR RELEASE PER A/D11 A/D13
10. MANWAY PER A/D16 A/D19
11. AIR\VAC VALVE PER C/D16 C/D12
12. EPHEMERAL WASH CROSSING PER A/D4
13. CONNECT TO EXISTING 18" WATERLINE PER A/D8
14. CLAY CUT-OFF WALL PER A/D5
15. 2-PIECE BEND A/D3
16. 3-PIECE BEND A/D3
17. JIM BRIDGER PIPELINE CROSSING A/D7 B/D7
18. GATE VALVE PER DETAIL D/D2
19. WEAK SOILS CROSSING E/D1
20. CONCRETE PIPELINE ANCHOR D/D13
21. 30"x12" CROSS WITH THRUST BLOCK PER A/D3
22. CHECK VALVE VAULT A/D8 B/D8
23. EROSION BLANKET PER F/D18 G/D18
24. SEDIMENT LOG/WATTLE PER A/D18 B/D18
25. FIRE HYDRANT PER F/D5

NORTH

SCALE
0 40' 80'
HORIZ: 1" = 80'

811 Know what's below. Call before you dig. 1-800-849-2476

REV NO.	COMMENT	DATE

SUNRISE ENGINEERING
770 S WASHINGTON ST.
AFTON, WYOMING 83110
TEL 307.885.8500 · FAX 307.885.8501
www.sunrise-eng.com

GR-RS-SC JPWB

CROSSROADS PUMP STATION

PLAN AND PROFILE

SEI NO.	DESIGNED	DRAWN	CHECKED	SHEET NO.	
07265	FDK	BJ	JJL	16 of 99	PP2

P:\WWDC GR-RS-SC JPWB Cross Roads Pump Station Level III (507265)\Dwg C3D\Sheets\Plan & Profile1.dwg Feb 13, 2026 @ 9:34am bjenkins

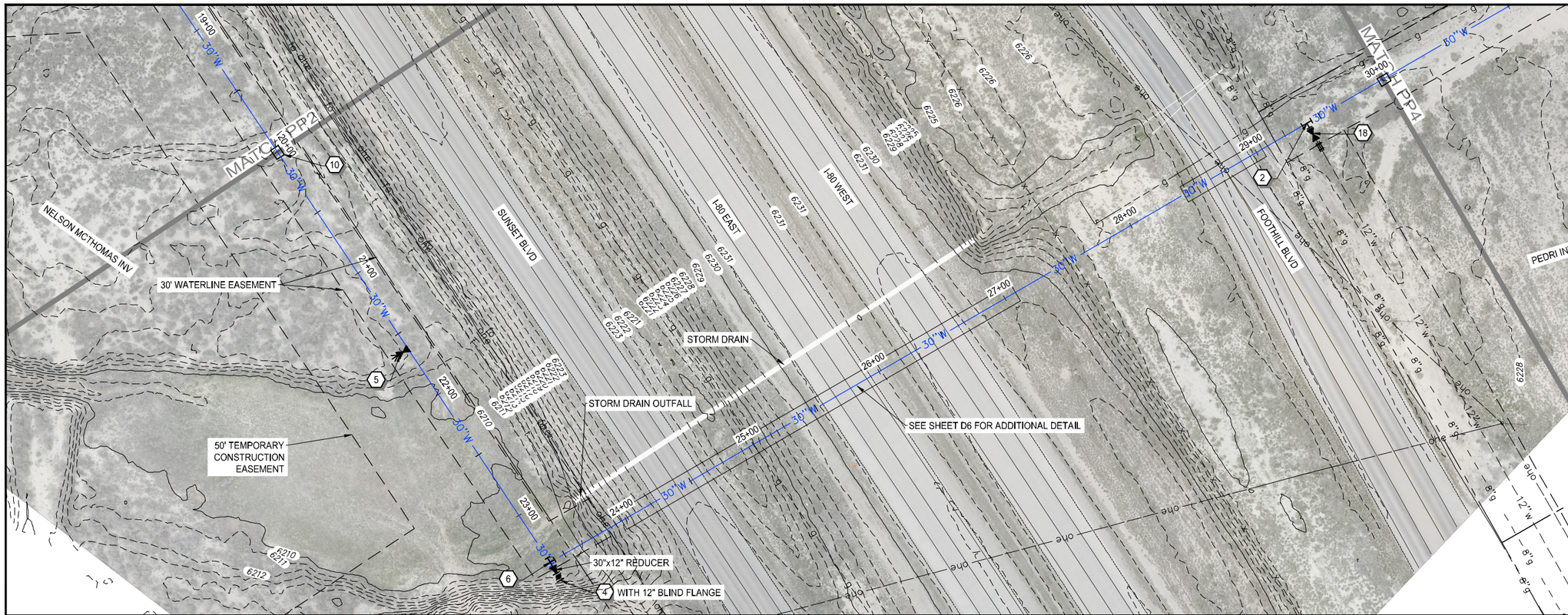

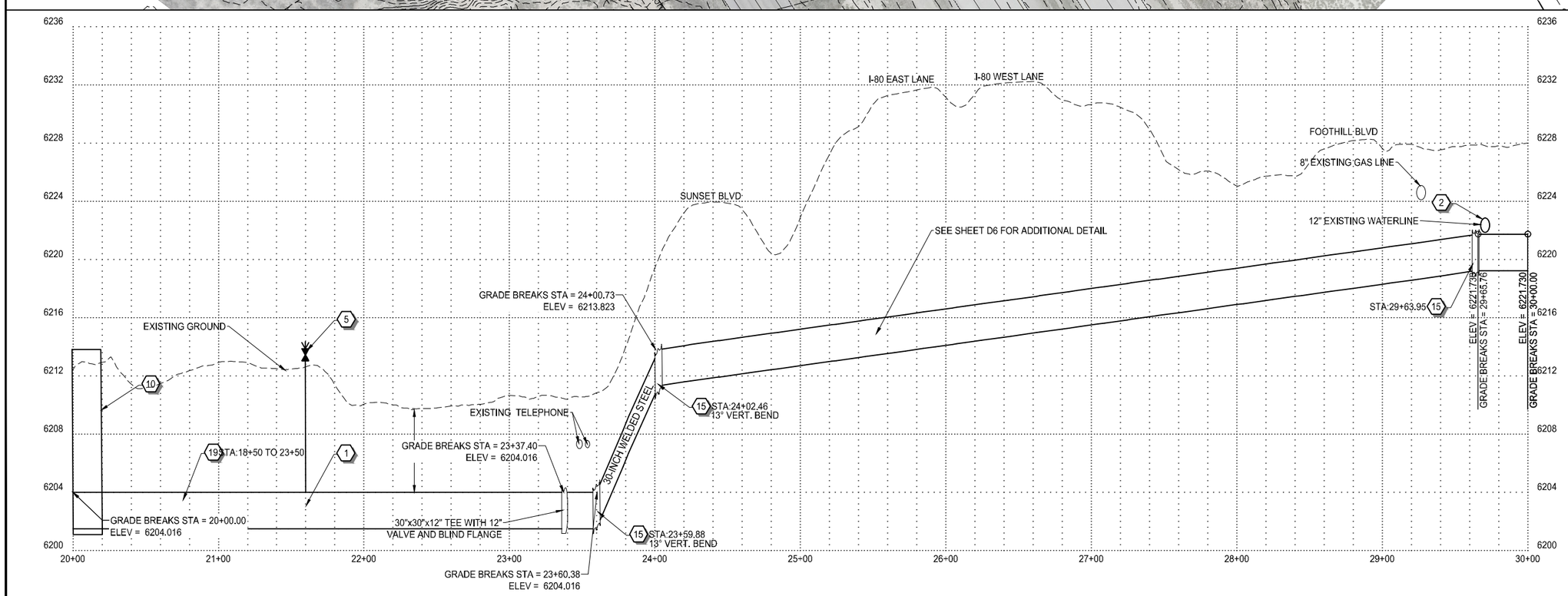

WATERLINE NOTES:

1. NEW 30" WATERLINE PER (A/D2) (B/D2)
2. CONNECT TO EXISTING 12" WATERLINE PER (C/D8) (D/D8) (E/D8)
3. BEND (90°, 45°, 221/2°, ETC.) WITH THRUST BLOCK. (A/D3)
4. BUTTERLY VALVE PER (C/D2)
5. BLOWOFF ASSEMBLY PER (C/D4)
6. TEE WITH THRUST BLOCK PER (A/D3)
7. CONNECT TO EXISTING 20" WATERLINE PER (A/D1)
8. MANWAY WITH AIR\VAC PER (A/D9) (C/D12)
9. MANWAY WITH AIR RELEASE PER (A/D11) (A/D13)
10. MANWAY PER (A/D16) (A/D12)
11. AIR\VAC VALVE PER (C/D16) (C/D12)
12. EPHEMERAL WASH CROSSING PER (A/D4)
13. CONNECT TO EXISTING 18" WATERLINE PER (A/D8)
14. CLAY CUT-OFF WALL PER (A/D5)
15. 2-PIECE BEND (A/D3)
16. 3-PIECE BEND (A/D3)
17. JIM BRIDGER PIPELINE CROSSING (A/D7) (B/D7)
18. GATE VALVE PER DETAIL (D/D2)
19. WEAK SOILS CROSSING (F/D1)
20. CONCRETE PIPELINE ANCHOR (D/D13)
21. 30"x12" CROSS WITH THRUST BLOCK PER (A/D3)
22. CHECK VALVE VAULT (A/D8) (B/D8)
23. EROSION BLANKET PER (F/D18) (G/D18)
24. SEDIMENT LOG/WATTLE PER (A/D18) (B/D18)
25. FIRE HYDRANT PER (F/D5)

NORTH

SCALE
0 40' 80'
HORIZ: 1" = 80'

811 Know what's below. Call before you dig. 1-800-849-2476

REV NO.	COMMENT	DATE

SUNRISE ENGINEERING
770 S WASHINGTON ST.
AFTON, WYOMING 83110
TEL 307.885.8500 - FAX 307.885.8501
www.sunrise-eng.com

GR-RS-SC JPWB

CROSSROADS PUMP STATION

PLAN AND PROFILE

SEI NO.	DESIGNED	DRAWN	CHECKED	SHEET NO.	
07265	FDK	BJ	JJL	17 of 99	PP3

P:\WWDC GR-RS-SC JPWB Cross Roads Pump Station Level III (S07265)\Dwg C3D\Sheets\Plan & Profile1.dwg Feb 13, 2026 @ 9:35am bjenkins

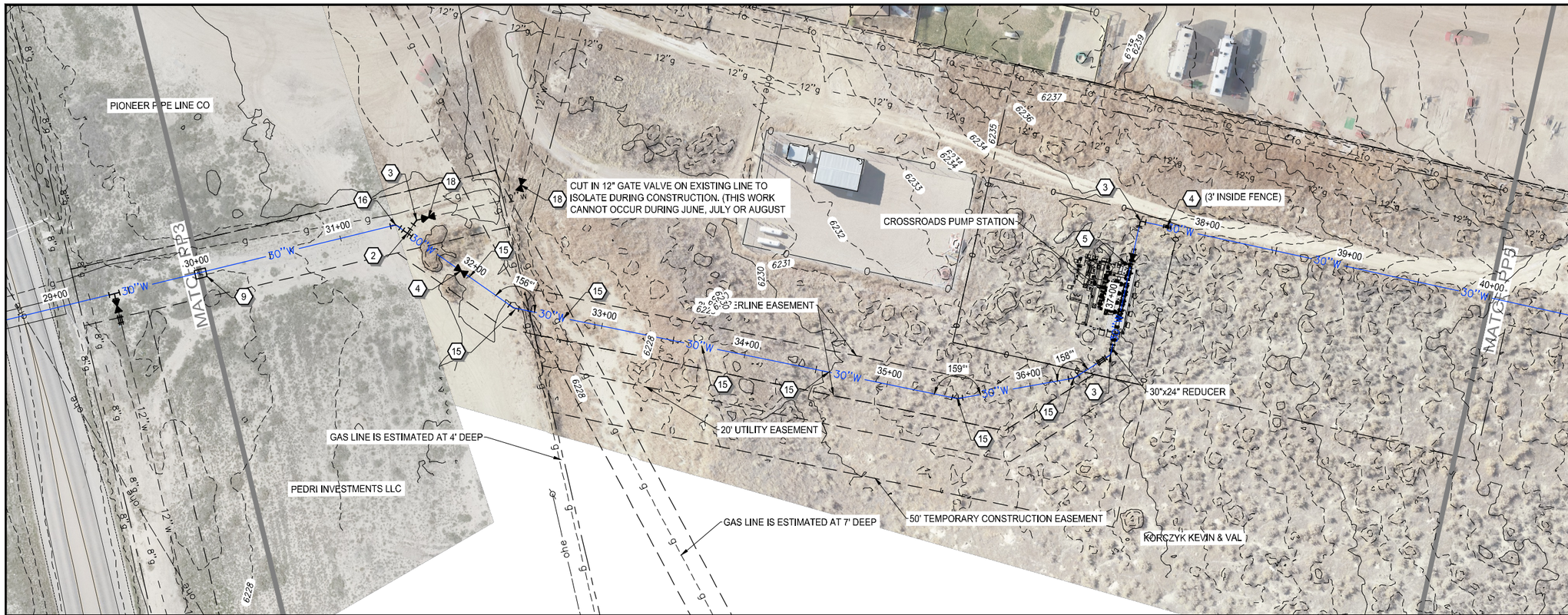

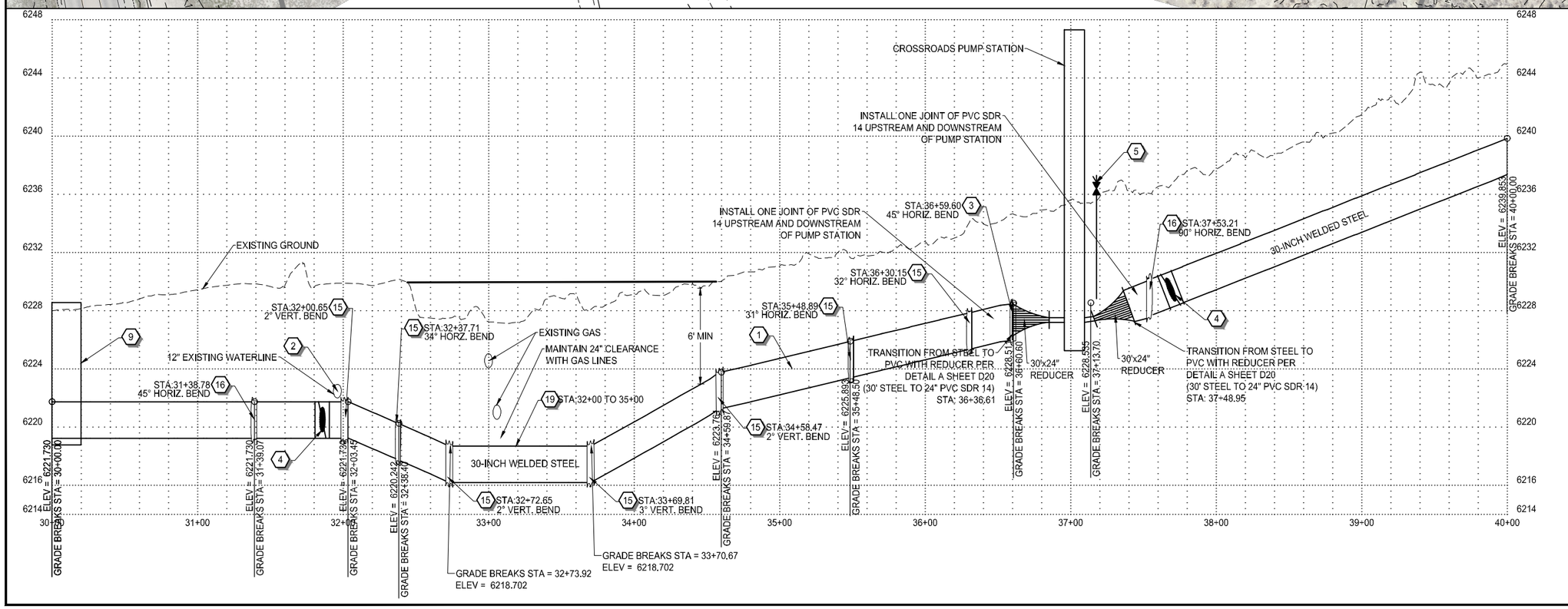

WATERLINE NOTES:

1. NEW 30" WATERLINE PER (A/D2) (B/D2)
2. CONNECT TO EXISTING 12" WATERLINE PER (C/D8) (D/D8) (E/D8)
3. BEND (90°, 45°, 221/2°, ETC.) WITH THRUST BLOCK. (A/D3)
4. BUTTERLY VALVE PER (C/D2)
5. BLOWOFF ASSEMBLY PER (C/D4)
6. TEE WITH THRUST BLOCK PER (A/D3)
7. CONNECT TO EXISTING 20" WATERLINE PER (A/D1)
8. MANWAY WITH AIR\VAC PER (A/D9) (C/D12)
9. MANWAY WITH AIR RELEASE PER (A/D11) (A/D13)
10. MANWAY PER (A/D16) (A/D17)
11. AIR\VAC VALVE PER (C/D16) (C/D17)
12. EPHEMERAL WASH CROSSING PER (A/D4)
13. CONNECT TO EXISTING 18" WATERLINE PER (A/D8)
14. CLAY CUT-OFF WALL PER (A/D5)
15. 2-PIECE BEND (A/D3)
16. 3-PIECE BEND (A/D3)
17. JIM BRIDGER PIPELINE CROSSING (A/D7) (B/D7)
18. GATE VALVE PER DETAIL (D/D2)
19. WEAK SOILS CROSSING (E/D1)
20. CONCRETE PIPELINE ANCHOR (D/D13)
21. 30"x12" CROSS WITH THRUST BLOCK PER (A/D3)
22. CHECK VALVE VAULT (A/D8) (B/D8)
23. EROSION BLANKET PER (F/D18) (G/D18)
24. SEDIMENT LOG/WATTLE PER (A/D18) (B/D18)
25. FIRE HYDRANT PER (F/D5)

NORTH

SCALE
0 40' 80'
HORIZ: 1" = 80'

811 Know what's below. Call before you dig. 1-800-849-2476

REV NO.	COMMENT	DATE

SUNRISE ENGINEERING
770 S WASHINGTON ST.
AFTON, WYOMING 83110
TEL 307.885.8500 - FAX 307.885.8501
www.sunrise-eng.com

GR-RS-SC JPWB

CROSSROADS PUMP STATION

PLAN AND PROFILE

SEI NO.	DESIGNED	DRAWN	CHECKED	SHEET NO.	
07265	FDK	BJ	JJL	18 of 99	PP4

P:\WWDC GR-RS-SC JPWB Cross Roads Pump Station Level III (S07265)\Dwg C3D\Sheets\Plan & Profile1.dwg Feb 13, 2026 @:35am bjenkins

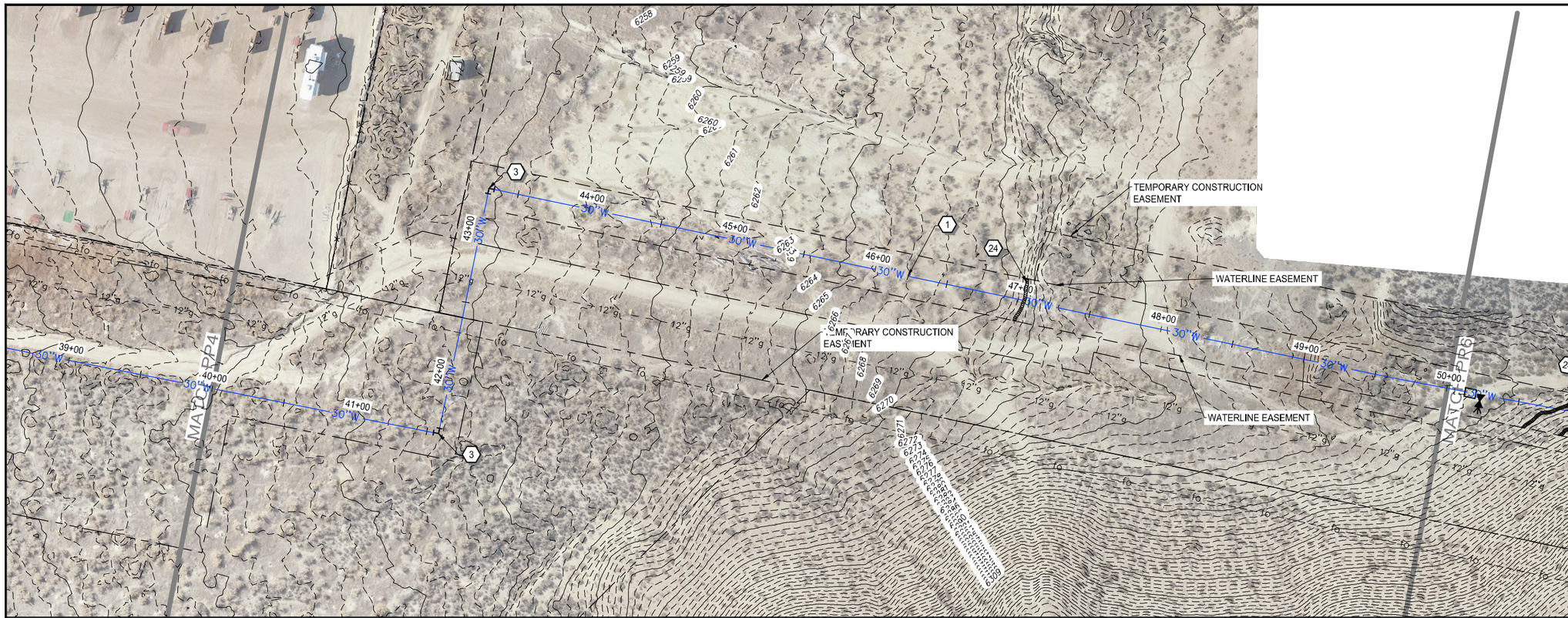

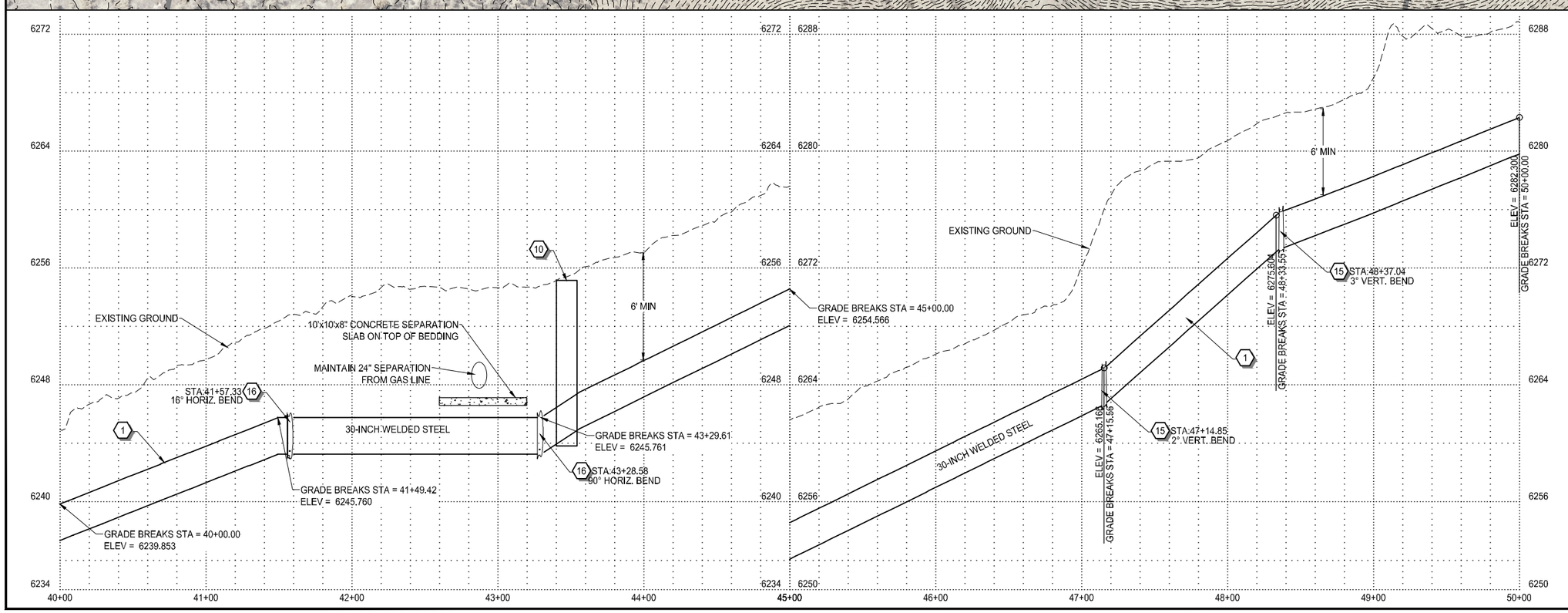

WATERLINE NOTES:

1. NEW 30" WATERLINE PER A/D2 B/D2
2. CONNECT TO EXISTING 12" WATERLINE PER C/D8 D/D8 E/D8
3. BEND (90°, 45°, 221/2°, ETC.) WITH THRUST BLOCK. A/D3
4. BUTTERLY VALVE PER C/D2
5. BLOWOFF ASSEMBLY PER C/D4
6. TEE WITH THRUST BLOCK PER A/D3
7. CONNECT TO EXISTING 20" WATERLINE PER A/D1
8. MANWAY WITH AIR\VAC PER A/D9 C/D12
9. MANWAY WITH AIR RELEASE PER A/D11 A/D13
10. MANWAY PER A/D10 A/D12
11. AIR\VAC VALVE PER C/D10 C/D12
12. EPHEMERAL WASH CROSSING PER A/D4
13. CONNECT TO EXISTING 18" WATERLINE PER A/D8
14. CLAY CUT-OFF WALL PER A/D5
15. 2-PIECE BEND A/D3
16. 3-PIECE BEND A/D3
17. JIM BRIDGER PIPELINE CROSSING A/D7 B/D7
18. GATE VALVE PER DETAIL D/D2
19. WEAK SOILS CROSSING E/D1
20. CONCRETE PIPELINE ANCHOR D/D13
21. 30"x12" CROSS WITH THRUST BLOCK PER A/D3
22. CHECK VALVE VAULT A/D8 B/D8
23. EROSION BLANKET PER F/D19 G/D19
24. SEDIMENT LOG/WATTLE PER A/D18 B/D18
25. FIRE HYDRANT PER F/D5

SCALE
0 40' 80'
HORIZ: 1" = 80'

811 Know what's below. Call before you dig. 1-800-849-2476

REV NO.	COMMENT	DATE

SUNRISE ENGINEERING
770 S WASHINGTON ST.
AFTON, WYOMING 83110
TEL 307.885.8500 - FAX 307.885.8501
www.sunrise-eng.com

GR-RS-SC JPWB

CROSSROADS PUMP STATION

PLAN AND PROFILE

SEI NO.	DESIGNED	DRAWN	CHECKED	SHEET NO.	
07265	FDK	BJ	JJL	19 of 99	PP5

P:\WWDC GR-RS-SC JPWB Cross Roads Pump Station Level III (S07265)\Dwg C3D\Sheets\Plan & Profile1.dwg Feb 13, 2026 @ 9:35am bjenkins

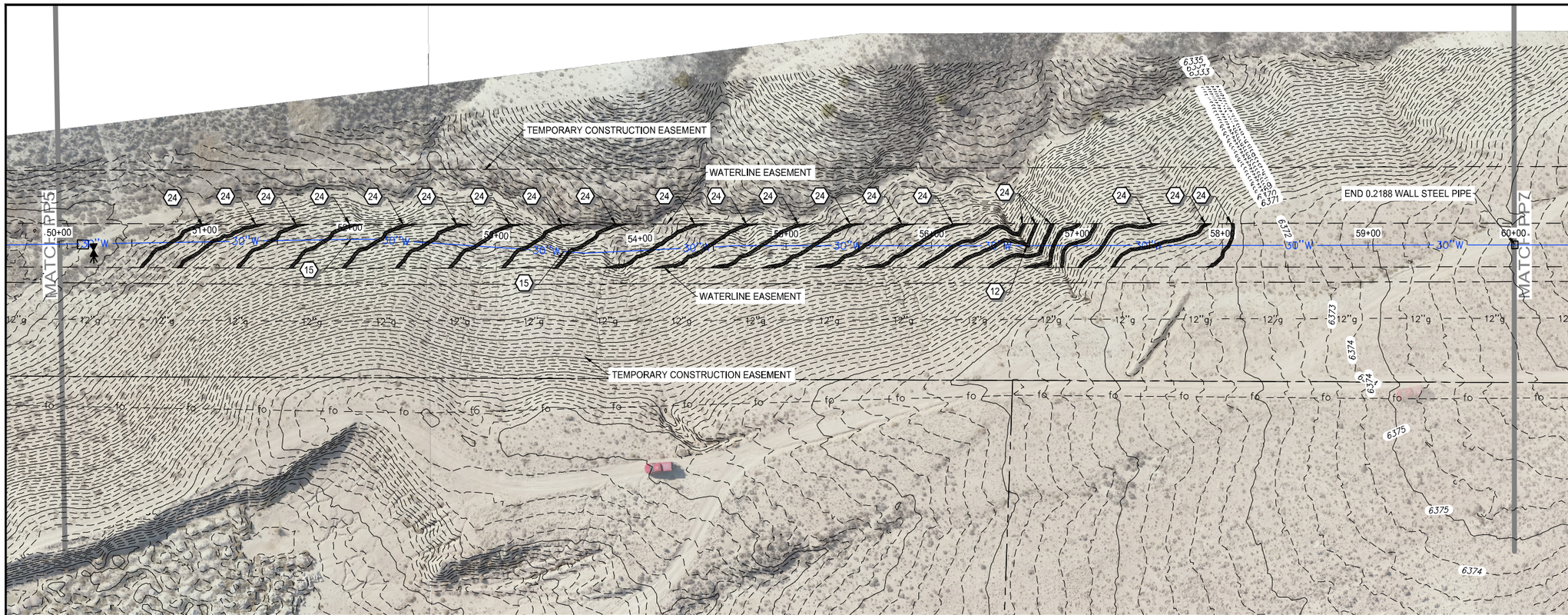

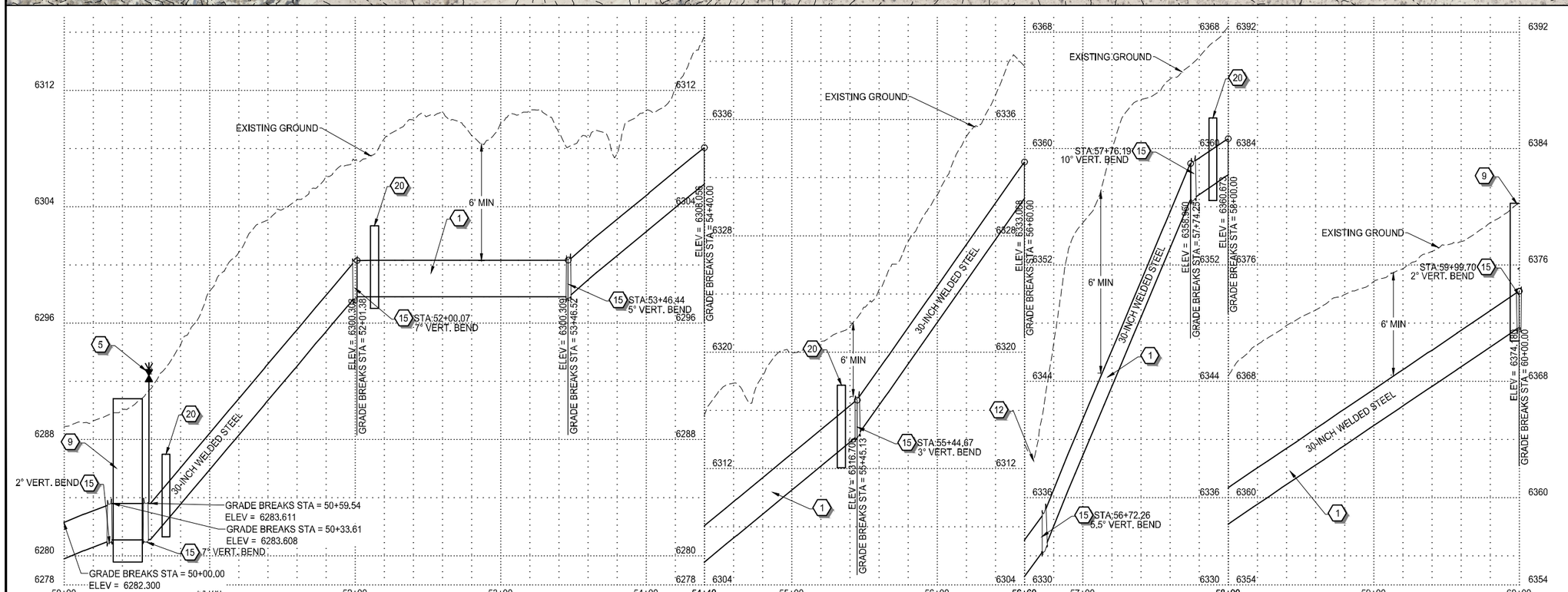

WATERLINE NOTES:

1. NEW 30" WATERLINE PER (A/D2) (B/D2)
2. CONNECT TO EXISTING 12" WATERLINE PER (C/D8) (D/D8) (E/D8)
3. BEND (90°, 45°, 221/2°, ETC.) WITH THRUST BLOCK. (A/D3)
4. BUTTERLY VALVE PER (C/D2)
5. BLOWOFF ASSEMBLY PER (C/D4)
6. TEE WITH THRUST BLOCK PER (A/D3)
7. CONNECT TO EXISTING 20" WATERLINE PER (A/D1)
8. MANWAY WITH AIR\VAC PER (A/D9) (C/D12)
9. MANWAY WITH AIR RELEASE PER (A/D11) (A/D13)
10. MANWAY PER (A/D16) (A/D19)
11. AIR\VAC VALVE PER (C/D16) (C/D12)
12. EPHEMERAL WASH CROSSING PER (A/D4)
13. CONNECT TO EXISTING 18" WATERLINE PER (A/D8)
14. CLAY CUT-OFF WALL PER (A/D5)
15. 2-PIECE BEND (A/D3)
16. 3-PIECE BEND (A/D3)
17. JIM BRIDGER PIPELINE CROSSING (A/D7) (B/D7)
18. GATE VALVE PER DETAIL (D/D2)
19. WEAK SOILS CROSSING (E/D1)
20. CONCRETE PIPELINE ANCHOR (D/D13)
21. 30"x12" CROSS WITH THRUST BLOCK PER (A/D3)
22. CHECK VALVE VAULT (A/D8) (B/D8)
23. EROSION BLANKET PER (F/D19) (G/D19)
24. SEDIMENT LOG/WATTLE PER (A/D18) (B/D18)
25. FIRE HYDRANT PER (F/D5)

NORTH

SCALE
0 40' 80'
HORIZ: 1" = 80'

811 Know what's below. Call before you dig. 1-800-849-2476

REV NO.	COMMENT	DATE

SUNRISE ENGINEERING
770 S WASHINGTON ST.
AFTON, WYOMING 83110
TEL 307.885.8500 · FAX 307.885.8501
www.sunrise-eng.com

GR–RS–SC JPWB

CROSSROADS PUMP STATION

PLAN AND PROFILE

SEI NO.	DESIGNED	DRAWN	CHECKED	SHEET NO.	
07265	FDK	BJ	JJL	20 of 99	PP6

P:\WWDC GR-RS-SC JPWB Cross Roads Pump Station Level III (S07265)\Dwg C3D\Sheets\Plan & Profile1.dwg Feb 13, 2026 9:36am bjenkins

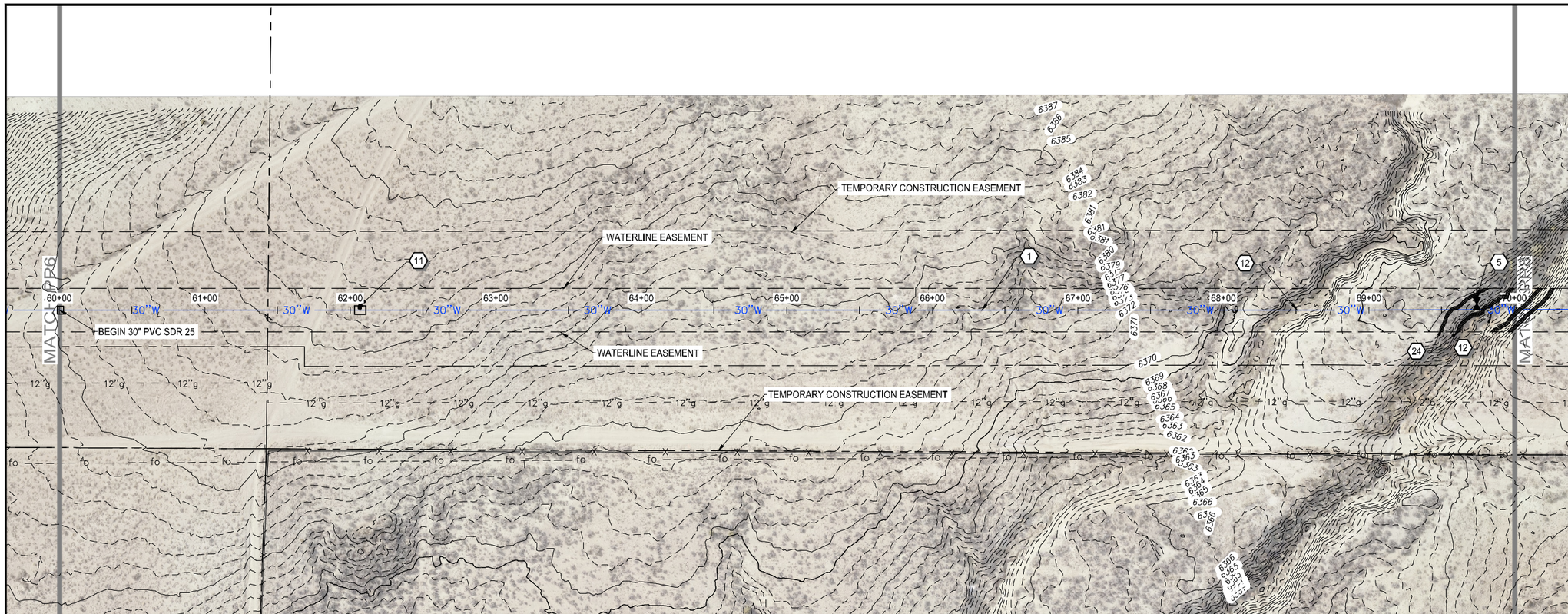

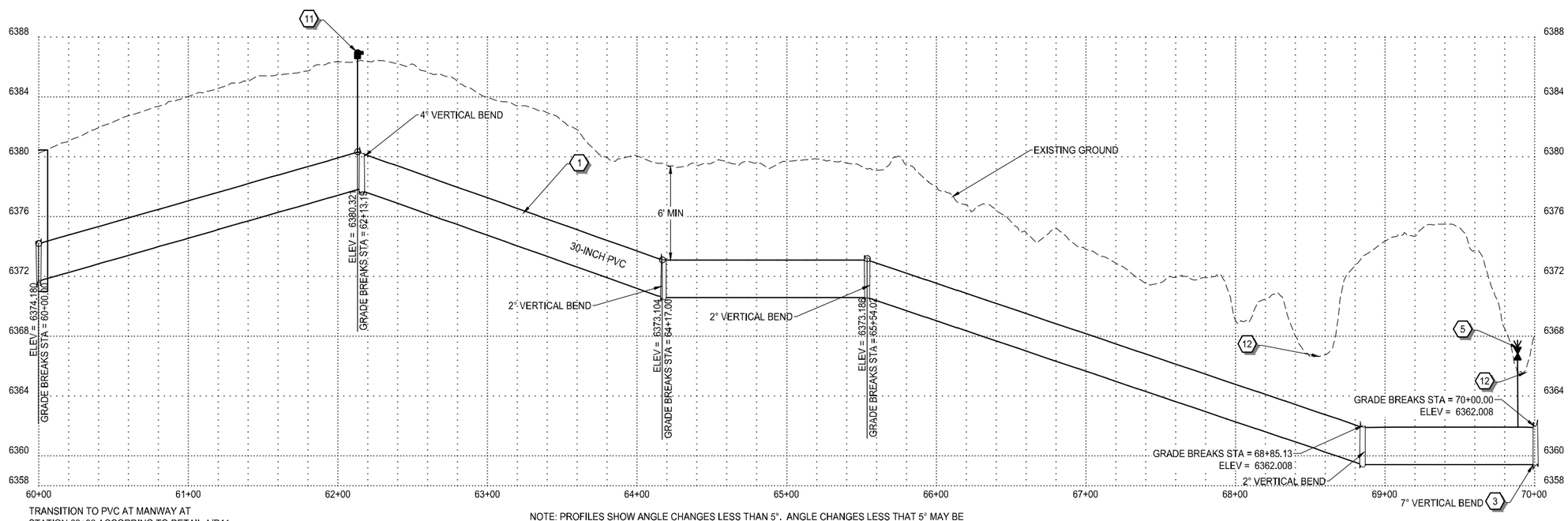

TRANSITION TO PVC AT MANWAY AT STATION 60+00 ACCORDING TO DETAIL A/D11

NOTE: PROFILES SHOW ANGLE CHANGES LESS THAN 5°. ANGLE CHANGES LESS THAT 5° MAY BE ACCOMPLISHED BY DEFLECTION IF NO SINGLE JOINT IS DEFLECTED MORE THAN 1/3 OF THE MANUFACTURES ALLOWABLE DEFLECTION AND DEFLECTION CAN BE MADE BY MANPOWER UNAIDED BY HYDRAULIC EQUIPMENT

WATERLINE NOTES:

1. NEW 30" WATERLINE PER A/D2 B/D2
2. CONNECT TO EXISTING 12" WATERLINE PER C/D8 D/D8 E/D8
3. BEND (90°, 45°, 221/2°, ETC.) WITH THRUST BLOCK. A/D3
4. BUTTERLY VALVE PER C/D2
5. BLOWOFF ASSEMBLY PER C/D4
6. TEE WITH THRUST BLOCK PER A/D3
7. CONNECT TO EXISTING 20" WATERLINE PER A/D1
8. MANWAY WITH AIR\VAC PER A/D9 C/D12
9. MANWAY WITH AIR RELEASE PER A/D11 A/D13
10. MANWAY PER A/D10 A/D12
11. AIR\VAC VALVE PER C/D10 C/D12
12. EPHEMERAL WASH CROSSING PER A/D4
13. CONNECT TO EXISTING 18" WATERLINE PER A/D8
14. CLAY CUT-OFF WALL PER A/D5
15. 2-PIECE BEND A/D3
16. 3-PIECE BEND A/D3
17. JIM BRIDGER PIPELINE CROSSING A/D7 B/D7
18. GATE VALVE PER DETAIL D/D2
19. WEAK SOILS CROSSING E/D1
20. CONCRETE PIPELINE ANCHOR D/D13
21. 30"x12" CROSS WITH THRUST BLOCK PER A/D3
22. CHECK VALVE VAULT A/D8 B/D8
23. EROSION BLANKET PER F/D19 G/D19
24. SEDIMENT LOG/WATTLE PER A/D18 B/D18
25. FIRE HYDRANT PER F/D5

NORTH

SCALE
0 40' 80'
HORIZ: 1" = 80'

811 Know what's below. Call before you dig. 1-800-849-2476

REV NO.	COMMENT	DATE

SUNRISE ENGINEERING
770 S WASHINGTON ST.
AFTON, WYOMING 83110
TEL 307.885.8500 · FAX 307.885.8501
www.sunrise-eng.com

GR-RS-SC JPWB

CROSSROADS PUMP STATION

PLAN AND PROFILE

SEI NO.	DESIGNED	DRAWN	CHECKED	SHEET NO.	
07265	FDK	BJ	JJL	21 of 99	PP7

P:\WWDC GR-RS-SC JPWB Cross Roads Pump Station Level III (S07265)\Dwg C3D\Sheets\Plan & Profile1.dwg Feb 13, 2026 9:36am bjenkins

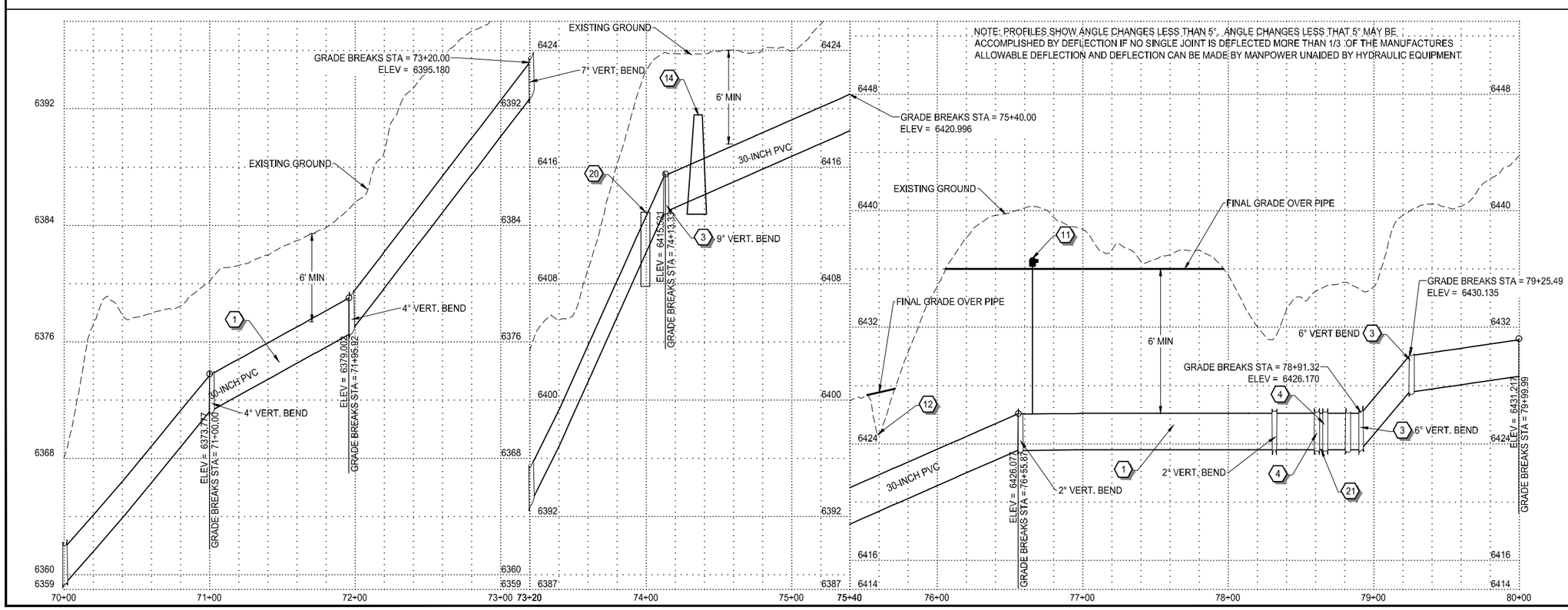

WATERLINE NOTES:

1. NEW 30" WATERLINE PER (A/D2) (B/D2)
2. CONNECT TO EXISTING 12" WATERLINE PER (C/D8) (D/D8) (E/D8)
3. BEND (90°, 45°, 221/2°, ETC.) WITH THRUST BLOCK. (A/D3)
4. BUTTERLY VALVE PER (C/D2)
5. BLOWOFF ASSEMBLY PER (C/D4)
6. TEE WITH THRUST BLOCK PER (A/D3)
7. CONNECT TO EXISTING 20" WATERLINE PER (A/D1)
8. MANWAY WITH AIR\VAC PER (A/D9) (C/D12)
9. MANWAY WITH AIR RELEASE PER (A/D11) (A/D13)
10. MANWAY PER (A/D16) (A/D12)
11. AIR\VAC VALVE PER (C/D10) (C/D12)
12. EPHEMERAL WASH CROSSING PER (A/D4)
13. CONNECT TO EXISTING 18" WATERLINE PER (A/D8)
14. CLAY CUT-OFF WALL PER (A/D5)
15. 2-PIECE BEND (A/D3)
16. 3-PIECE BEND (A/D3)
17. JIM BRIDGER PIPELINE CROSSING (A/D7) (B/D7)
18. GATE VALVE PER DETAIL (D/D2)
19. WEAK SOILS CROSSING (E/D1)
20. CONCRETE PIPELINE ANCHOR (D/D13)
21. 30"x12" CROSS WITH THRUST BLOCK PER (A/D3)
22. CHECK VALVE VAULT (A/D8) (B/D8)
23. EROSION BLANKET PER (F/D18) (G/D18)
24. SEDIMENT LOG/WATTLE PER (A/D18) (B/D18)
25. FIRE HYDRANT PER (F/D5)

SCALE
0 40' 80'
HORIZ: 1" = 80'

811 Know what's below. Call before you dig. 1-800-849-2476

REV NO.	COMMENT	DATE

SUNRISE ENGINEERING
770 S WASHINGTON ST.
AFTON, WYOMING 83110
TEL 307.885.8500 · FAX 307.885.8501
www.sunrise-eng.com

GR-RS-SC JPWB

CROSSROADS PUMP STATION

PLAN AND PROFILE

SEI NO.	DESIGNED	DRAWN	CHECKED	SHEET NO.	
07265	FDK	BJ	JJL	22 of 99	PP8

P:\WWDC GR-RS-SC JPWB Cross Roads Pump Station Level III (507265)\Dwg C3D\Sheets\Plan & Profile1.dwg Feb 13, 2026 9:36am bjenkins

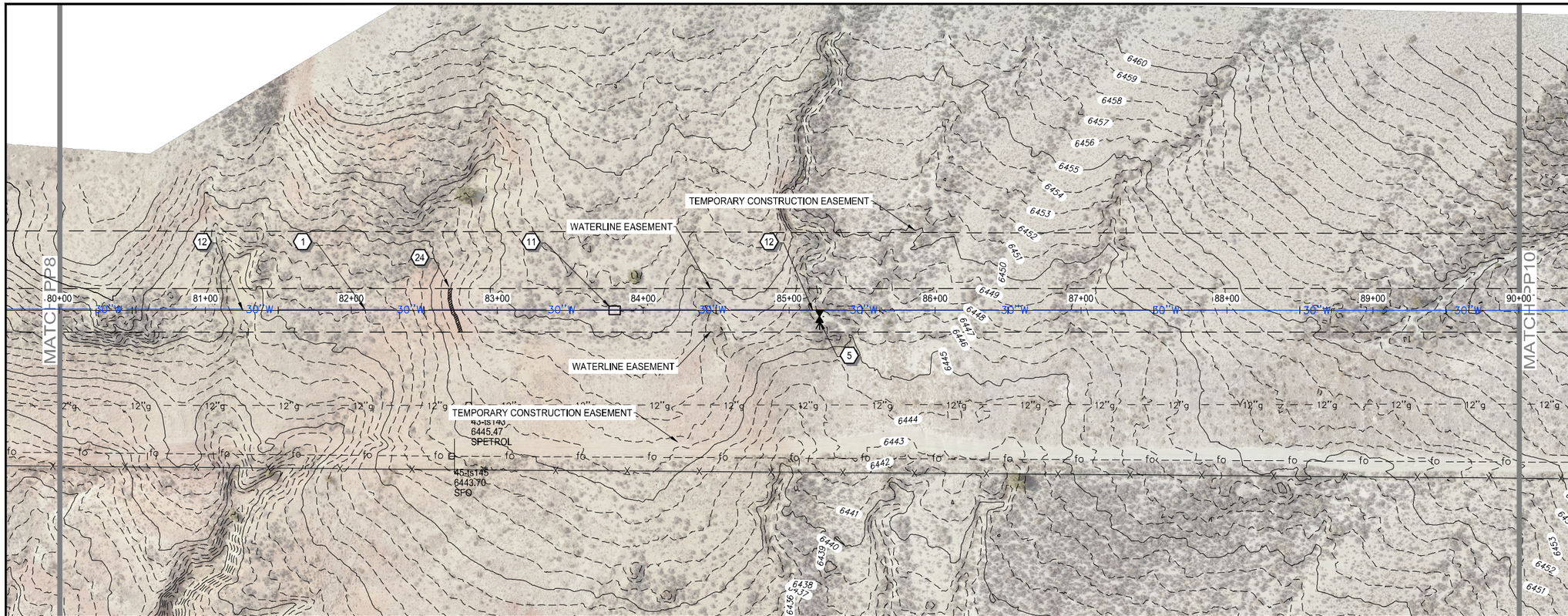

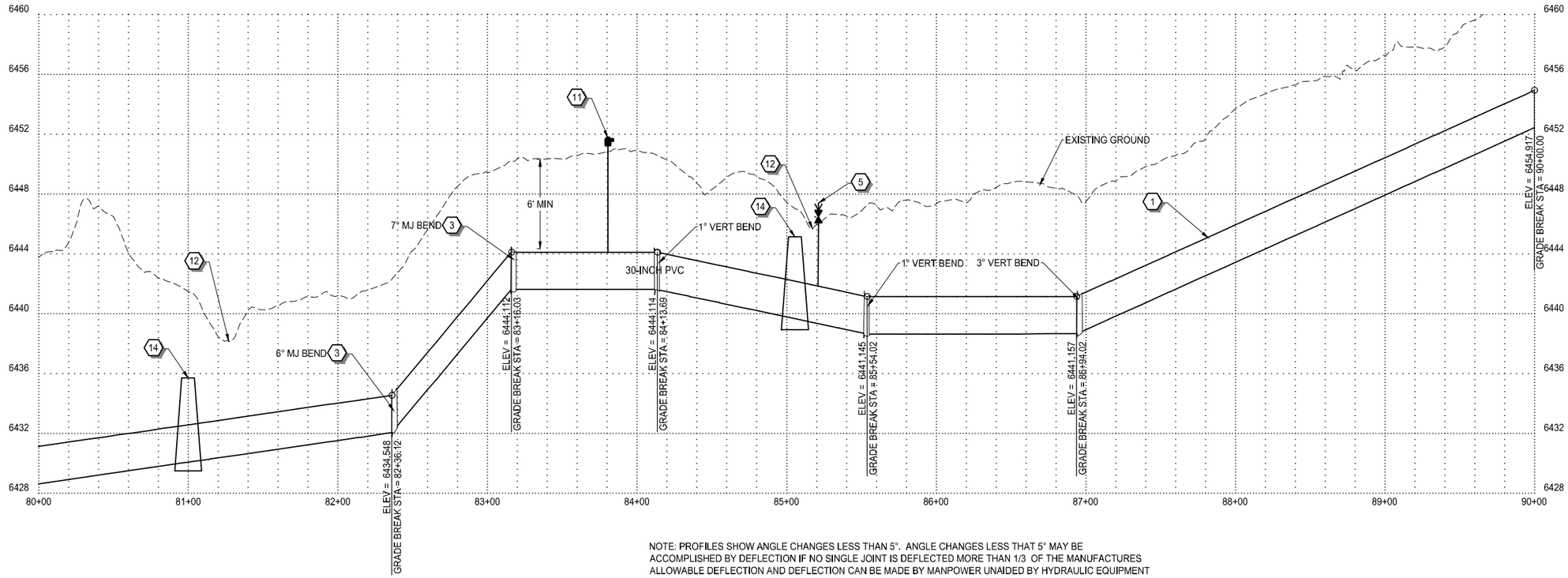

NOTE: PROFILES SHOW ANGLE CHANGES LESS THAN 5°. ANGLE CHANGES LESS THAT 5° MAY BE ACCOMPLISHED BY DEFLECTION IF NO SINGLE JOINT IS DEFLECTED MORE THAN 1/3 OF THE MANUFACTURES ALLOWABLE DEFLECTION AND DEFLECTION CAN BE MADE BY MANPOWER UNAIDED BY HYDRAULIC EQUIPMENT

WATERLINE NOTES:

1. NEW 30" WATERLINE PER A/D2 B/D2
2. CONNECT TO EXISTING 12" WATERLINE PER C/D8 D/D8 E/D8
3. BEND (90°, 45°, 221/2°, ETC.) WITH THRUST BLOCK. A/D3
4. BUTTERLY VALVE PER C/D2
5. BLOWOFF ASSEMBLY PER C/D4
6. TEE WITH THRUST BLOCK PER A/D3
7. CONNECT TO EXISTING 20" WATERLINE PER A/D1
8. MANWAY WITH AIR\VAC PER A/D9 C/D12
9. MANWAY WITH AIR RELEASE PER A/D11 A/D13
10. MANWAY PER A/D16 A/D19
11. AIR\VAC VALVE PER C/D16 C/D12
12. EPHEMERAL WASH CROSSING PER A/D4
13. CONNECT TO EXISTING 18" WATERLINE PER A/D8
14. CLAY CUT-OFF WALL PER A/D5
15. 2-PIECE BEND A/D3
16. 3-PIECE BEND A/D3
17. JIM BRIDGER PIPELINE CROSSING A/D7 B/D7
18. GATE VALVE PER DETAIL D/D2
19. WEAK SOILS CROSSING E/D1
20. CONCRETE PIPELINE ANCHOR D/D13
21. 30"x12" CROSS WITH THRUST BLOCK PER A/D3
22. CHECK VALVE VAULT A/D8 B/D8
23. EROSION BLANKET PER F/D18 G/D18
24. SEDIMENT LOG/WATTLE PER A/D18 B/D18
25. FIRE HYDRANT PER F/D5

SCALE
0 40' 80'
HORIZ: 1" = 80'

811 Know what's below. Call before you dig. 1-800-849-2476

SUNRISE ENGINEERING
770 S WASHINGTON ST.
AFTON, WYOMING 83110
TEL 307.885.8500 · FAX 307.885.8501
www.sunrise-eng.com

GR–RS–SC JPWB

CROSSROADS PUMP STATION

PLAN AND PROFILE

SEI NO.	DESIGNED	DRAWN	CHECKED	SHEET NO.	
07265	FDK	BJ	JJL	23 of 99	PP9

P:\WWDC GR-RS-SC JPWB Cross Roads Pump Station Level III (S07265)\Dwg C3D\Sheets\Plan & Profile2.dwg Feb 13, 2026 9:36am bjenkins

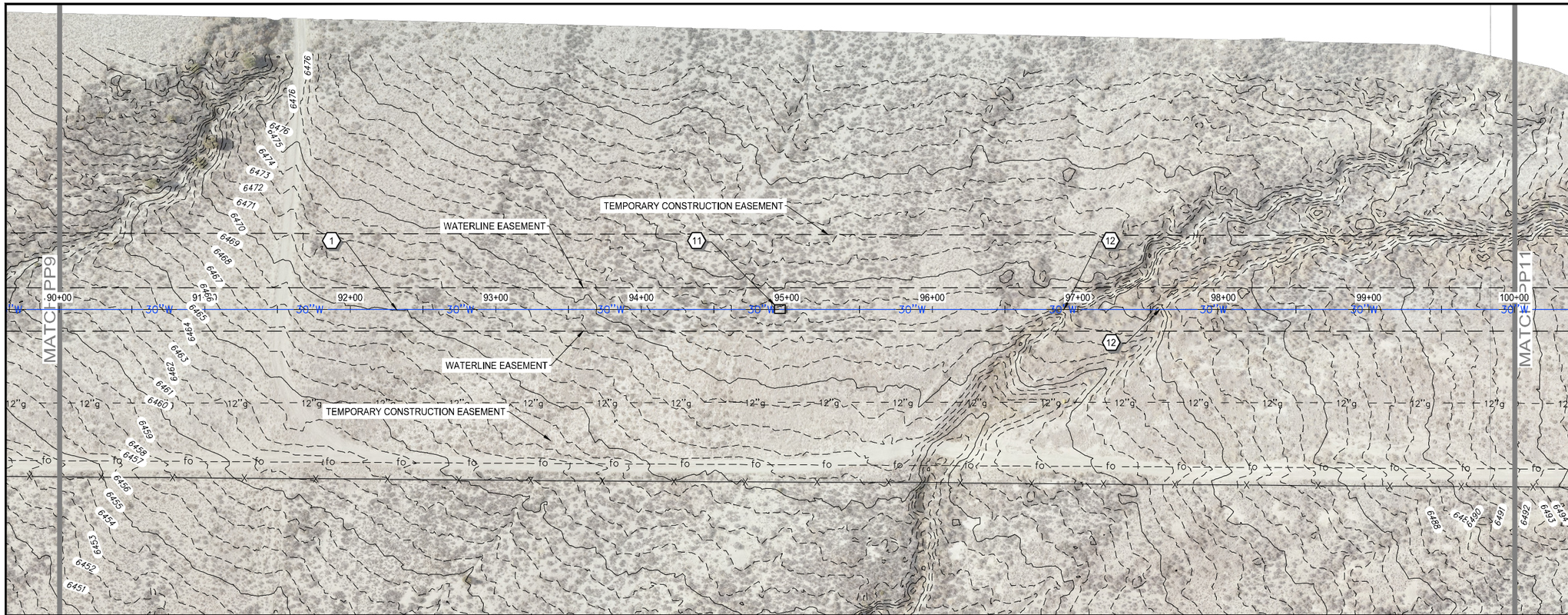

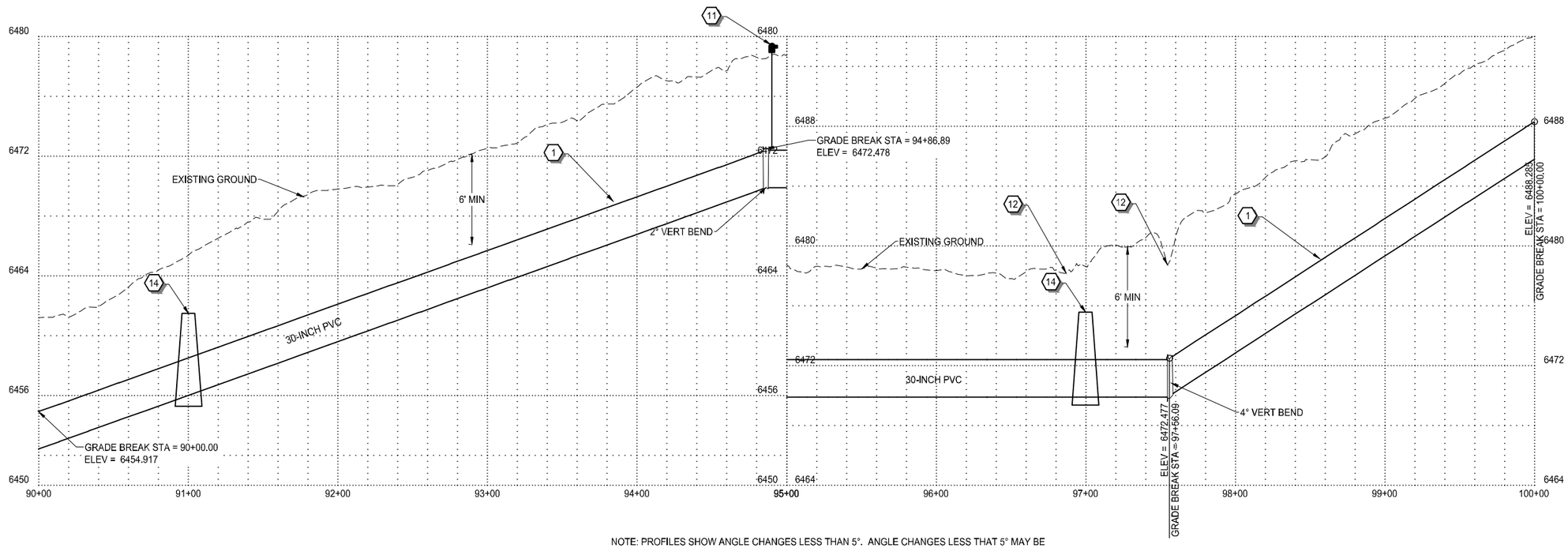

NOTE: PROFILES SHOW ANGLE CHANGES LESS THAN 5°. ANGLE CHANGES LESS THAT 5° MAY BE ACCOMPLISHED BY DEFLECTION IF NO SINGLE JOINT IS DEFLECTED MORE THAN 1/3 OF THE MANUFACTURES ALLOWABLE DEFLECTION AND DEFLECTION CAN BE MADE BY MANPOWER UNAIDED BY HYDRAULIC EQUIPMENT

WATERLINE NOTES:

1. NEW 30" WATERLINE PER A/D2 B/D2
2. CONNECT TO EXISTING 12" WATERLINE PER C/D8 D/D8 E/D8
3. BEND (90°, 45°, 221/2°, ETC.) WITH THRUST BLOCK. A/D3
4. BUTTERLY VALVE PER C/D2
5. BLOWOFF ASSEMBLY PER C/D4
6. TEE WITH THRUST BLOCK PER A/D3
7. CONNECT TO EXISTING 20" WATERLINE PER A/D1
8. MANWAY WITH AIR\VAC PER A/D9 C/D12
9. MANWAY WITH AIR RELEASE PER A/D11 A/D13
10. MANWAY PER A/D16 A/D19
11. AIR\VAC VALVE PER C/D10 C/D12
12. EPHEMERAL WASH CROSSING PER A/D4
13. CONNECT TO EXISTING 18" WATERLINE PER A/D8
14. CLAY CUT-OFF WALL PER A/D5
15. 2-PIECE BEND A/D3
16. 3-PIECE BEND A/D3
17. JIM BRIDGER PIPELINE CROSSING A/D7 B/D7
18. GATE VALVE PER DETAIL D/D2
19. WEAK SOILS CROSSING E/D1
20. CONCRETE PIPELINE ANCHOR D/D13
21. 30"x12" CROSS WITH THRUST BLOCK PER A/D3
22. CHECK VALVE VAULT A/D8 B/D8
23. EROSION BLANKET PER F/D18 G/D18
24. SEDIMENT LOG/WATTLE PER A/D18 B/D18
25. FIRE HYDRANT PER F/D5

SCALE
0 40' 80'
HORIZ: 1" = 80'

811 Know what's below. Call before you dig. 1-800-849-2476

SUNRISE ENGINEERING
770 S WASHINGTON ST.
AFTON, WYOMING 83110
TEL 307.885.8500 · FAX 307.885.8501
www.sunrise-eng.com

GR–RS–SC JPWB

CROSSROADS PUMP STATION

PLAN AND PROFILE

SEI NO.	DESIGNED	DRAWN	CHECKED	SHEET NO.	
07265	FDK	BJ	JJL	24 of 99	PP10

P:\WWDC GR-RS-SC JPWB Cross Roads Pump Station Level III (S07265)\Dwg C3D\Sheets\Plan & Profile2.dwg Feb 13, 2026 9:37am bjenkins

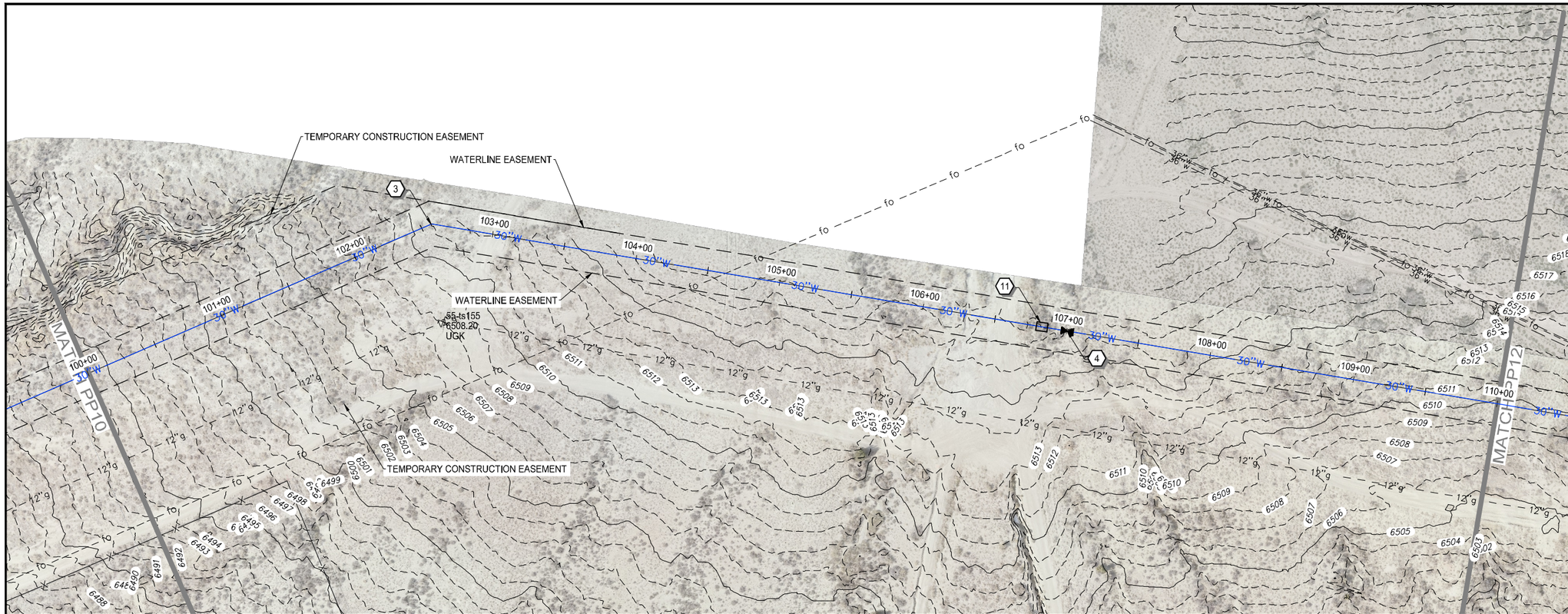

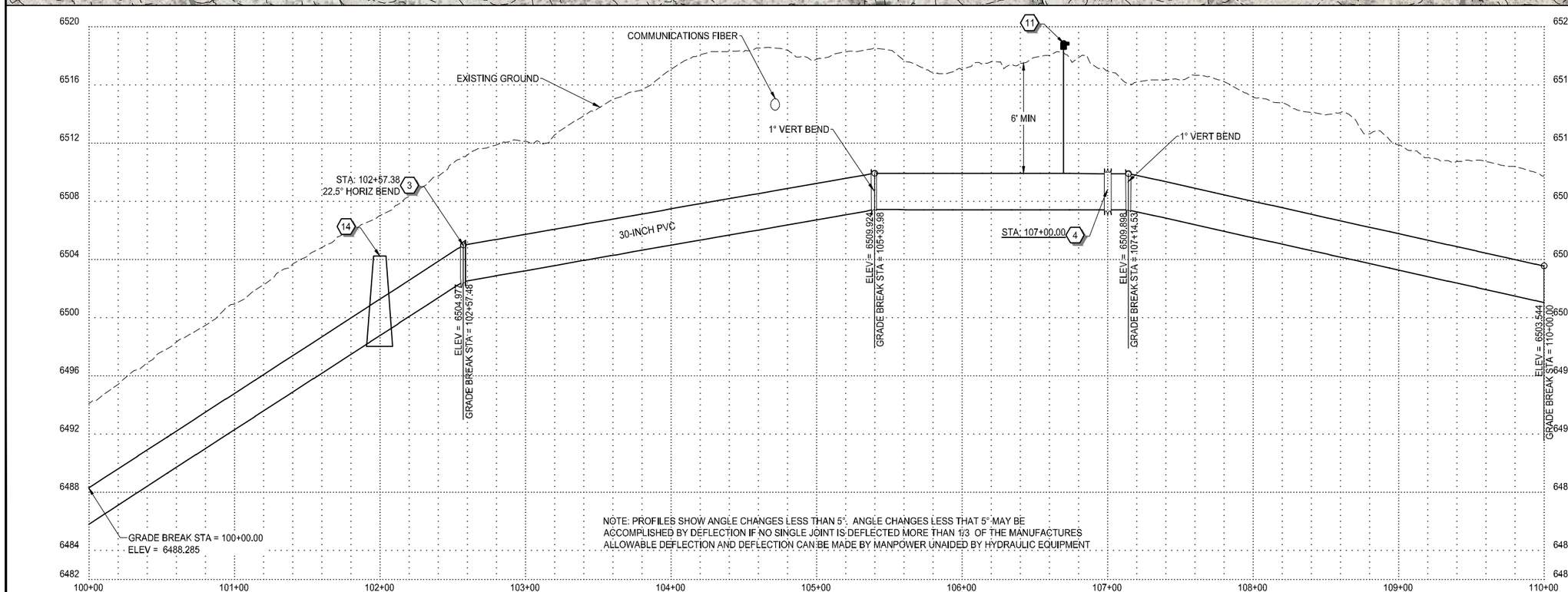

NOTE: PROFILES SHOW ANGLE CHANGES LESS THAN 5°. ANGLE CHANGES LESS THAT 5° MAY BE ACCOMPLISHED BY DEFLECTION IF NO SINGLE JOINT IS DEFLECTED MORE THAN 1/3 OF THE MANUFACTURES ALLOWABLE DEFLECTION AND DEFLECTION CAN BE MADE BY MANPOWER UNAIDED BY HYDRAULIC EQUIPMENT

WATERLINE NOTES:

1. NEW 30" WATERLINE PER (A/D2) (B/D2)
2. CONNECT TO EXISTING 12" WATERLINE PER (C/D8) (D/D8) (E/D8)
3. BEND (90°, 45°, 221/2°, ETC.) WITH THRUST BLOCK. (A/D3)
4. BUTTERLY VALVE PER (C/D2)
5. BLOWOFF ASSEMBLY PER (C/D4)
6. TEE WITH THRUST BLOCK PER (A/D3)
7. CONNECT TO EXISTING 20" WATERLINE PER (A/D1)
8. MANWAY WITH AIR\VAC PER (A/D9) (C/D12)
9. MANWAY WITH AIR RELEASE PER (A/D11) (A/D13)
10. MANWAY PER (A/D10) (A/D12)
11. AIR\VAC VALVE PER (C/D10) (C/D12)
12. EPHEMERAL WASH CROSSING PER (A/D4)
13. CONNECT TO EXISTING 18" WATERLINE PER (A/D8)
14. CLAY CUT-OFF WALL PER (A/D5)
15. 2-PIECE BEND (A/D3)
16. 3-PIECE BEND (A/D3)
17. JIM BRIDGER PIPELINE CROSSING (A/D7) (B/D7)
18. GATE VALVE PER DETAIL (D/D2)
19. WEAK SOILS CROSSING (E/D1)
20. CONCRETE PIPELINE ANCHOR (D/D13)
21. 30"x12" CROSS WITH THRUST BLOCK PER (A/D3)
22. CHECK VALVE VAULT (A/D8) (B/D8)
23. EROSION BLANKET PER (F/D19) (G/D19)
24. SEDIMENT LOG/WATTLE PER (A/D18) (B/D18)
25. FIRE HYDRANT PER (F/D5)

NORTH

SCALE
0 40' 80'
HORIZ: 1" = 80'

811 Know what's below. Call before you dig. 1-800-849-2476

SUNRISE ENGINEERING
770 S WASHINGTON ST.
AFTON, WYOMING 83110
TEL 307.885.8500 · FAX 307.885.8501
www.sunrise-eng.com

GR-RS-SC JPWB

CROSSROADS PUMP STATION

PLAN AND PROFILE

SEI NO.	DESIGNED	DRAWN	CHECKED	SHEET NO.	
07265	FDK	BJ	JJL	25 of 99	PP11

P:\WWDC GR-RS-SC JPWB Cross Roads Pump Station Level III (S07265)\Dwg C3D\Sheets\Plan & Profile2.dwg Feb 13, 2026 9:37am bjenkins

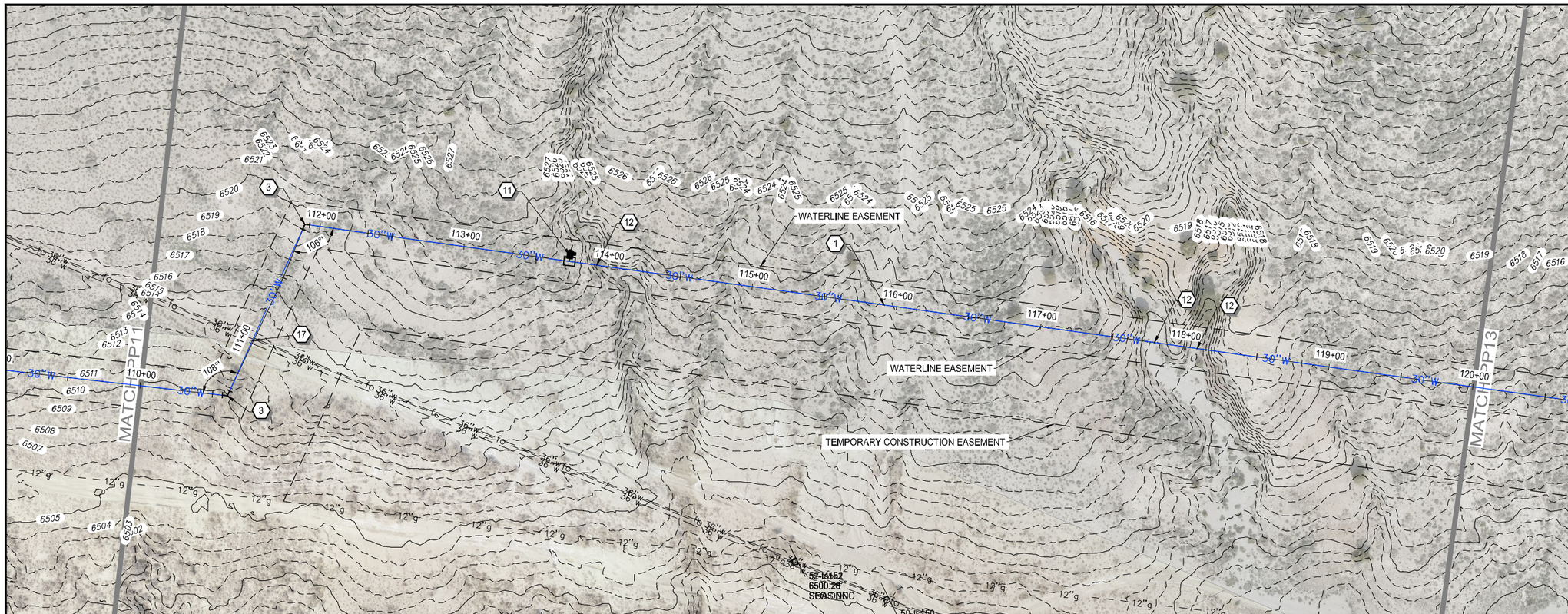

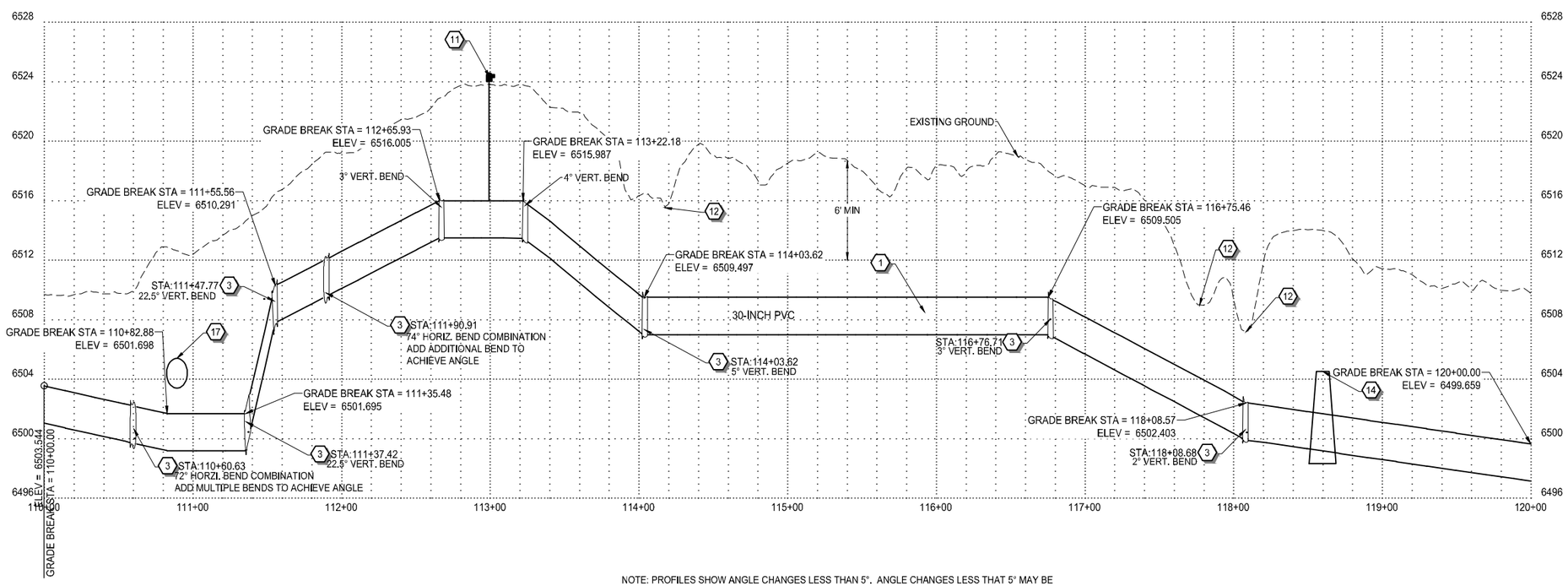

NOTE: PROFILES SHOW ANGLE CHANGES LESS THAN 5°. ANGLE CHANGES LESS THAT 5° MAY BE ACCOMPLISHED BY DEFLECTION IF NO SINGLE JOINT IS DEFLECTED MORE THAN 1/3 OF THE MANUFACTURES ALLOWABLE DEFLECTION AND DEFLECTION CAN BE MADE BY MANPOWER UNAIDED BY HYDRAULIC EQUIPMENT

WATERLINE NOTES:

1. NEW 30" WATERLINE PER (A/D2) (B/D2)
2. CONNECT TO EXISTING 12" WATERLINE PER (C/D8) (D/D8) (E/D8)
3. BEND (90°, 45°, 221/2°, ETC.) WITH THRUST BLOCK. (A/D3)
4. BUTTERLY VALVE PER (C/D2)
5. BLOWOFF ASSEMBLY PER (C/D4)
6. TEE WITH THRUST BLOCK PER (A/D3)
7. CONNECT TO EXISTING 20" WATERLINE PER (A/D1)
8. MANWAY WITH AIR\VAC PER (A/D9) (C/D12)
9. MANWAY WITH AIR RELEASE PER (A/D11) (A/D13)
10. MANWAY PER (A/D16) (A/D12)
11. AIR\VAC VALVE PER (C/D10) (C/D12)
12. EPHEMERAL WASH CROSSING PER (A/D4)
13. CONNECT TO EXISTING 18" WATERLINE PER (A/D8)
14. CLAY CUT-OFF WALL PER (A/D5)
15. 2-PIECE BEND (A/D3)
16. 3-PIECE BEND (A/D3)
17. JIM BRIDGER PIPELINE CROSSING (A/D7) (B/D7)
18. GATE VALVE PER DETAIL (D/D2)
19. WEAK SOILS CROSSING (E/D1)
20. CONCRETE PIPELINE ANCHOR (D/D13)
21. 30"x12" CROSS WITH THRUST BLOCK PER (A/D3)
22. CHECK VALVE VAULT (A/D8) (B/D8)
23. EROSION BLANKET PER (F/D19) (G/D19)
24. SEDIMENT LOG/WATTLE PER (A/D18) (B/D18)
25. FIRE HYDRANT PER (F/D5)

SCALE
0 40' 80'
HORIZ: 1" = 80'

811 Know what's below. Call before you dig. 1-800-849-2476

SUNRISE ENGINEERING
770 S WASHINGTON ST.
AFTON, WYOMING 83110
TEL 307.885.8500 · FAX 307.885.8501
www.sunrise-eng.com

GR-RS-SC JPWB

CROSSROADS PUMP STATION

PLAN AND PROFILE

SEI NO.	DESIGNED	DRAWN	CHECKED	SHEET NO.	
07265	FDK	BJ	JJL	26 of 99	PP12

P:\WWDC GR-RS-SC JPWB Cross Roads Pump Station Level III (S07265)\Dwg C3D\Sheets\Plan & Profile2.dwg Feb 13, 2026 9:37am bjenkins

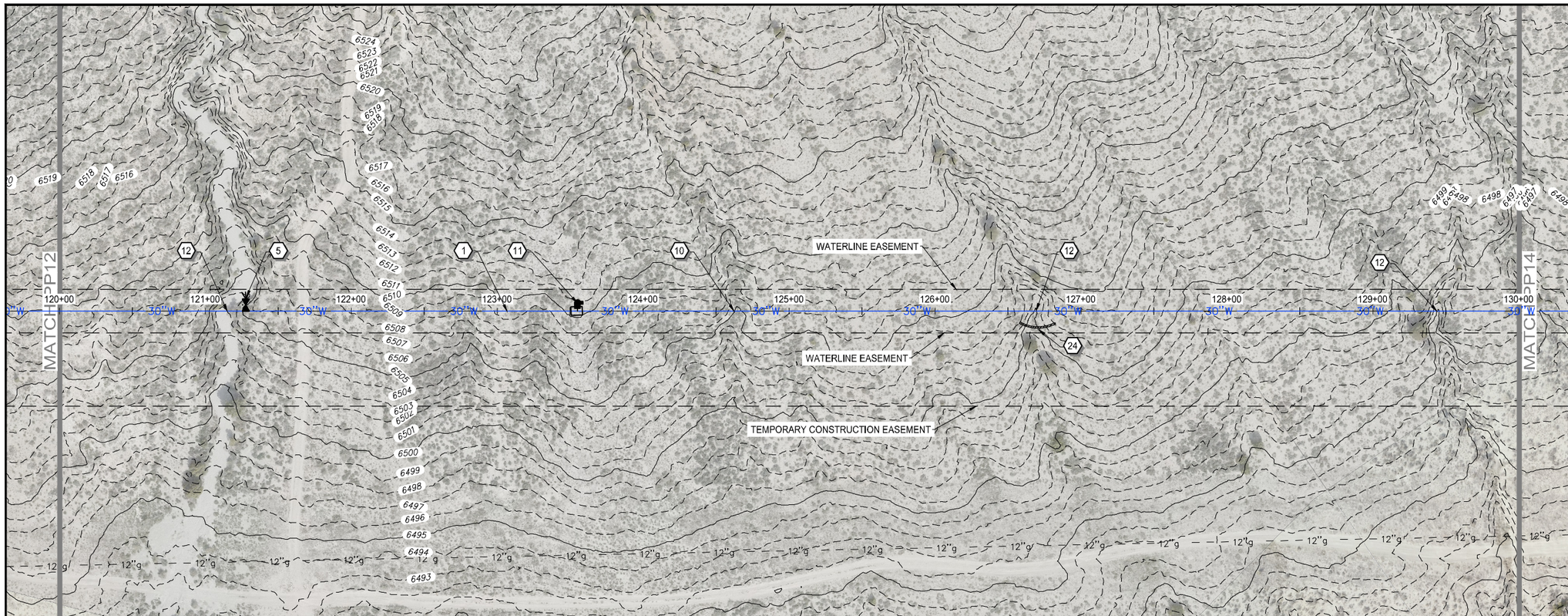

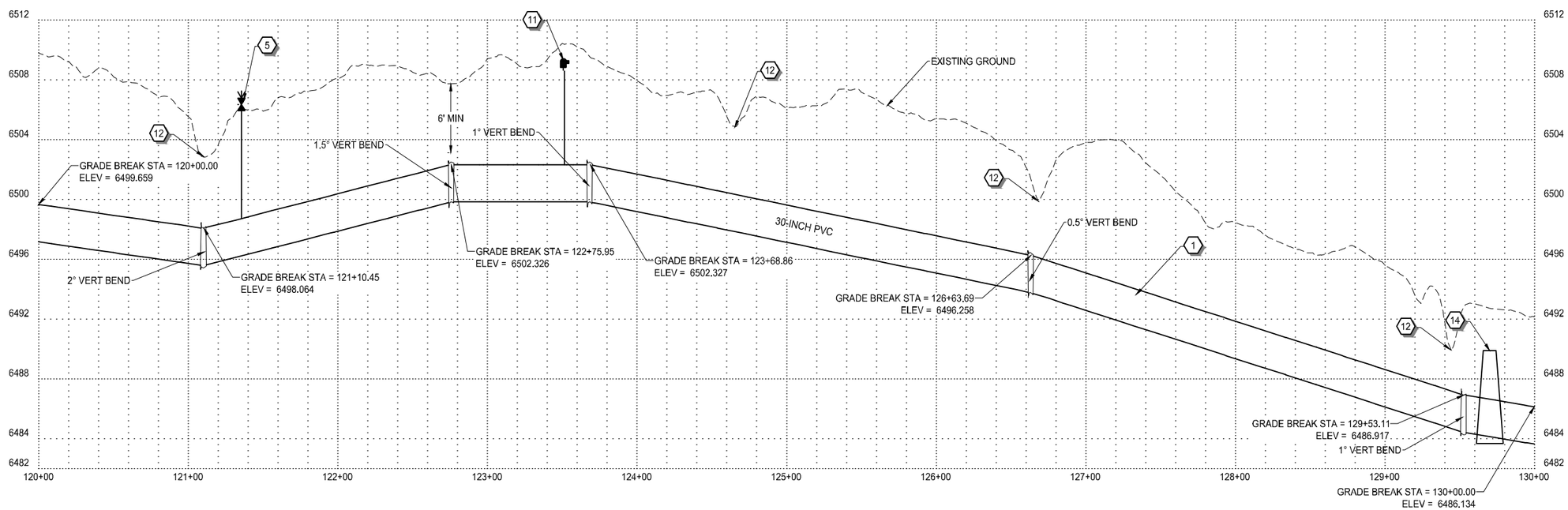

NOTE: PROFILES SHOW ANGLE CHANGES LESS THAN 5°. ANGLE CHANGES LESS THAT 5° MAY BE ACCOMPLISHED BY DEFLECTION IF NO SINGLE JOINT IS DEFLECTED MORE THAN 1/3 OF THE MANUFACTURES ALLOWABLE DEFLECTION AND DEFLECTION CAN BE MADE BY MANPOWER UNAIDED BY HYDRAULIC EQUIPMENT

WATERLINE NOTES:

1. NEW 30" WATERLINE PER (A/D2) (B/D2)
2. CONNECT TO EXISTING 12" WATERLINE PER (C/D8) (D/D8) (E/D8)
3. BEND (90°, 45°, 221/2°, ETC.) WITH THRUST BLOCK. (A/D3)
4. BUTTERLY VALVE PER (C/D2)
5. BLOWOFF ASSEMBLY PER (C/D4)
6. TEE WITH THRUST BLOCK PER (A/D3)
7. CONNECT TO EXISTING 20" WATERLINE PER (A/D1)
8. MANWAY WITH AIR\VAC PER (A/D9) (C/D12)
9. MANWAY WITH AIR RELEASE PER (A/D11) (A/D13)
10. MANWAY PER (A/D16) (A/D12)
11. AIR\VAC VALVE PER (C/D10) (C/D12)
12. EPHEMERAL WASH CROSSING PER (A/D4)
13. CONNECT TO EXISTING 18" WATERLINE PER (A/D8)
14. CLAY CUT-OFF WALL PER (A/D5)
15. 2-PIECE BEND (A/D3)
16. 3-PIECE BEND (A/D3)
17. JIM BRIDGER PIPELINE CROSSING (A/D7) (B/D7)
18. GATE VALVE PER DETAIL (D/D2)
19. WEAK SOILS CROSSING (F/D1)
20. CONCRETE PIPELINE ANCHOR (D/D13)
21. 30"x12" CROSS WITH THRUST BLOCK PER (A/D3)
22. CHECK VALVE VAULT (A/D8) (B/D8)
23. EROSION BLANKET PER (F/D18) (G/D18)
24. SEDIMENT LOG/WATTLE PER (A/D18) (B/D18)
25. FIRE HYDRANT PER (F/D5)

NORTH

SCALE
0 40' 80'
HORIZ: 1" = 80'

811 Know what's below. Call before you dig. 1-800-849-2476

SUNRISE ENGINEERING
770 S WASHINGTON ST.
AFTON, WYOMING 83110
TEL 307.885.8500 · FAX 307.885.8501
www.sunrise-eng.com

GR–RS–SC JPWB

CROSSROADS PUMP STATION

PLAN AND PROFILE

SEI NO.	DESIGNED	DRAWN	CHECKED	SHEET NO.	
07265	FDK	BJ	JJL	27 of 99	PP13

P:\WWDC GR-RS-SC JPWB Cross Roads Pump Station Level III (307265)\Dwg C3D\Sheets\Plan & Profile2.dwg Feb 13, 2026 9:38am bjenkins

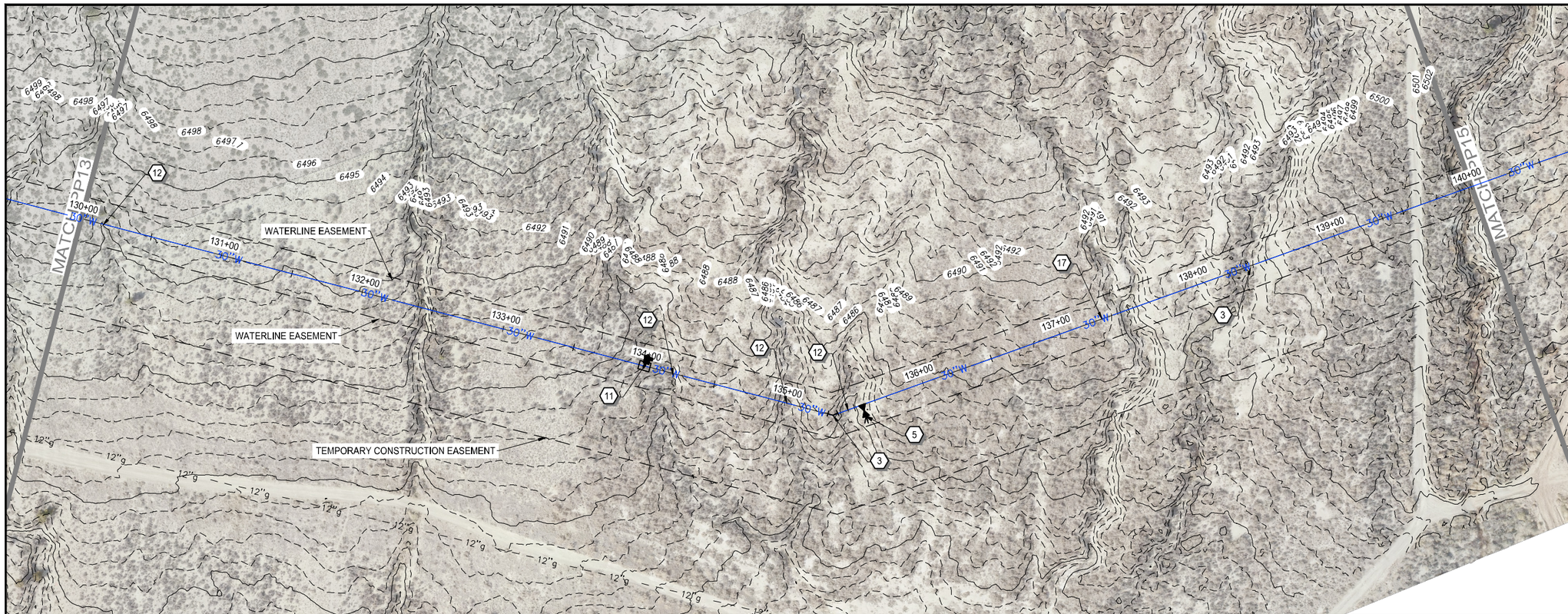

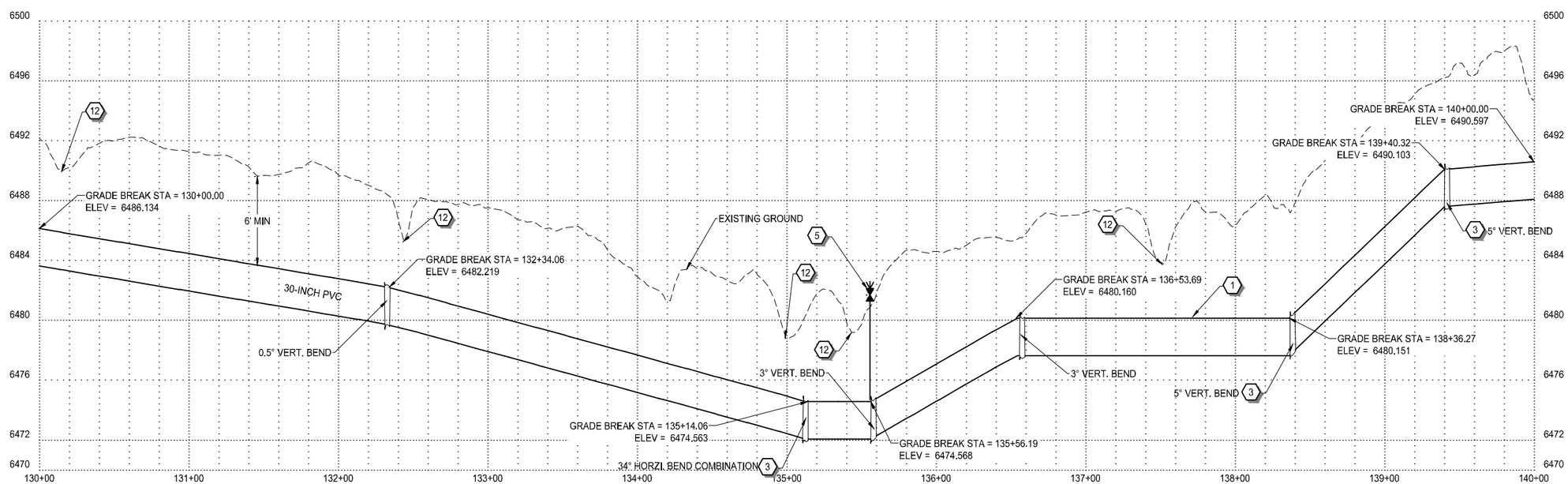

NOTE: PROFILES SHOW ANGLE CHANGES LESS THAN 5°. ANGLE CHANGES LESS THAT 5° MAY BE ACCOMPLISHED BY DEFLECTION IF NO SINGLE JOINT IS DEFLECTED MORE THAN 1/3 OF THE MANUFACTURES ALLOWABLE DEFLECTION AND DEFLECTION CAN BE MADE BY MANPOWER UNAIDED BY HYDRAULIC EQUIPMENT

WATERLINE NOTES:

1. NEW 30" WATERLINE PER A/D2 B/D2
2. CONNECT TO EXISTING 12" WATERLINE PER C/D8 D/D8 E/D8
3. BEND (90°, 45°, 221/2°, ETC.) WITH THRUST BLOCK. A/D3
4. BUTTERLY VALVE PER C/D2
5. BLOWOFF ASSEMBLY PER C/D4
6. TEE WITH THRUST BLOCK PER A/D3
7. CONNECT TO EXISTING 20" WATERLINE PER A/D1
8. MANWAY WITH AIR\VAC PER A/D9 C/D12
9. MANWAY WITH AIR RELEASE PER A/D11 A/D13
10. MANWAY PER A/D16 A/D17
11. AIR\VAC VALVE PER C/D10 C/D12
12. EPHEMERAL WASH CROSSING PER A/D4
13. CONNECT TO EXISTING 18" WATERLINE PER A/D8
14. CLAY CUT-OFF WALL PER A/D5
15. 2-PIECE BEND A/D3
16. 3-PIECE BEND A/D3
17. JIM BRIDGER PIPELINE CROSSING A/D7 B/D7
18. GATE VALVE PER DETAIL D/D2
19. WEAK SOILS CROSSING E/D1
20. CONCRETE PIPELINE ANCHOR D/D13
21. 30"x12" CROSS WITH THRUST BLOCK PER A/D3
22. CHECK VALVE VAULT A/D8 B/D8
23. EROSION BLANKET PER F/D19 G/D19
24. SEDIMENT LOG/WATTLE PER A/D18 B/D18
25. FIRE HYDRANT PER F/D5

NORTH

SCALE
0 40' 80'
HORIZ: 1" = 80'

811 Know what's below. Call before you dig. 1-800-849-2476

SUNRISE ENGINEERING
770 S WASHINGTON ST.
AFTON, WYOMING 83110
TEL 307.885.8500 · FAX 307.885.8501
www.sunrise-eng.com

GR–RS–SC JPWB

CROSSROADS PUMP STATION

PLAN AND PROFILE

SEI NO.	DESIGNED	DRAWN	CHECKED	SHEET NO.	
07265	FDK	BJ	JJL	28 of 99	PP14

P:\WWDC GR-RS-SC JPWB Cross Roads Pump Station Level III (3077265)\Dwg C3D\Sheets\Plan & Profile2.dwg Feb 13, 2026 9:38am bjenkins

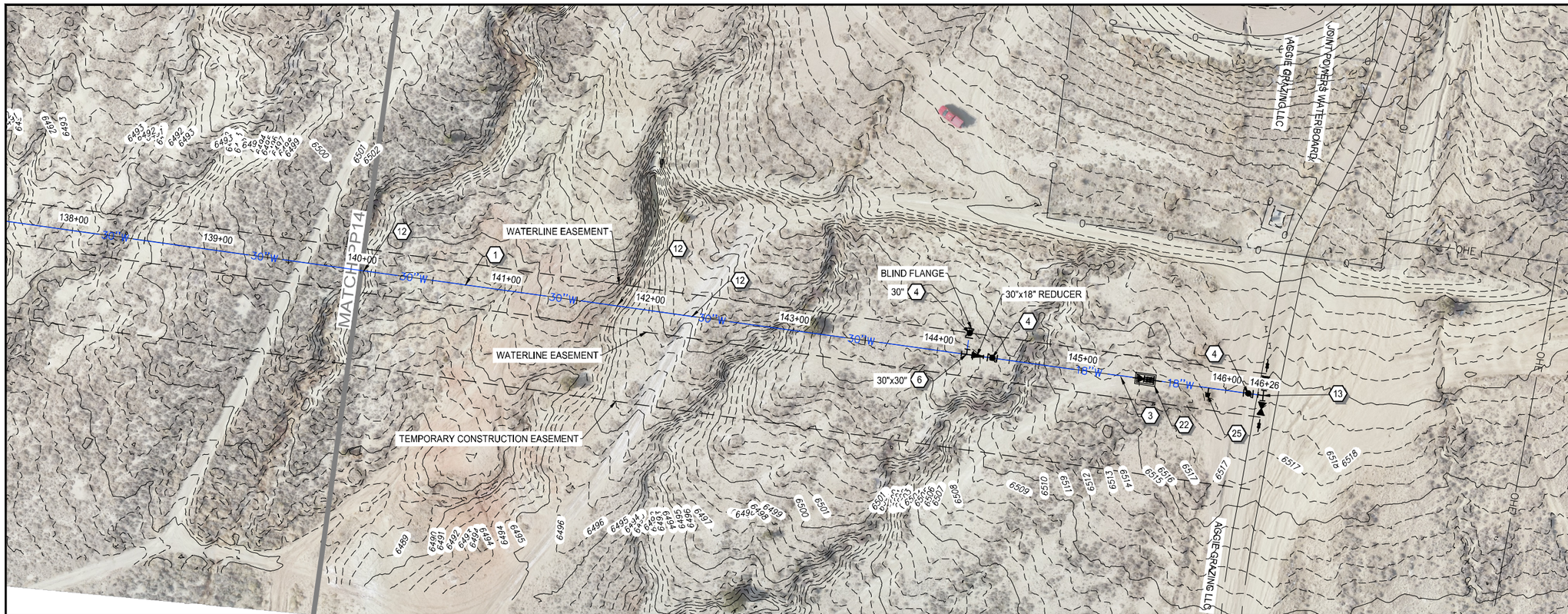

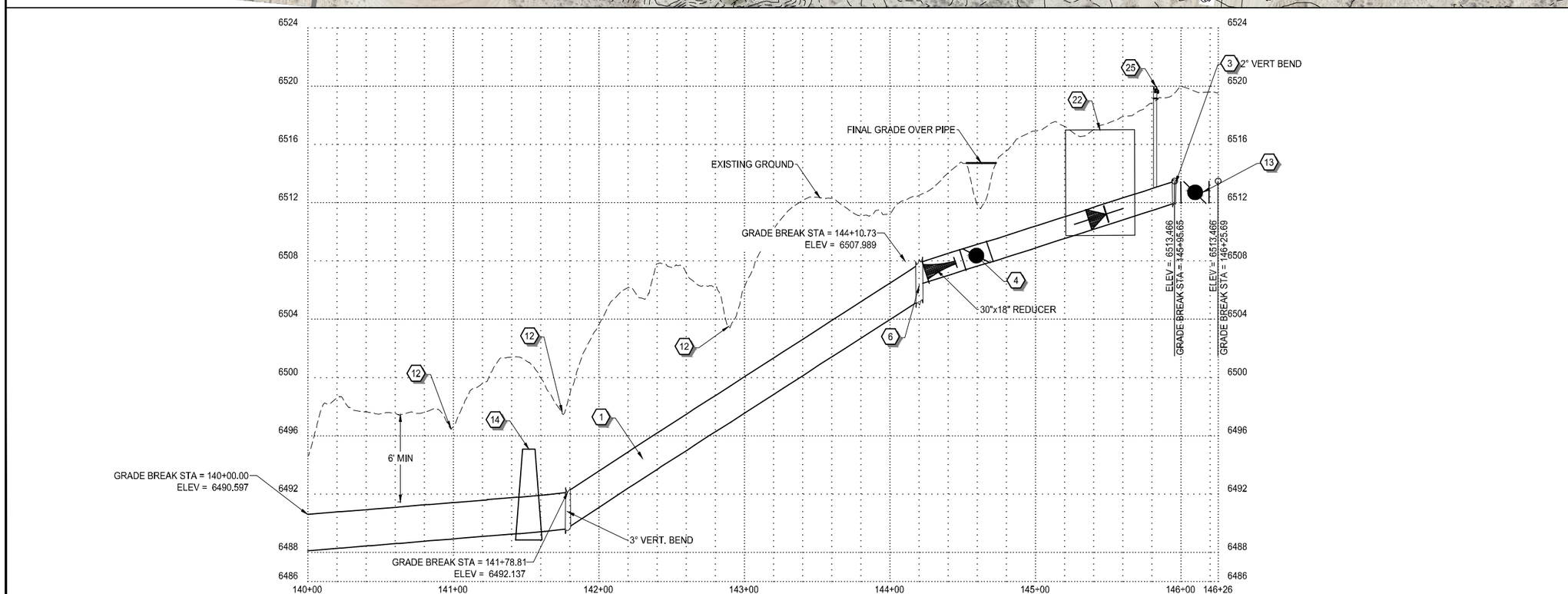

WATERLINE NOTES:

1. NEW 30" WATERLINE PER (A/D2) (B/D2)
2. CONNECT TO EXISTING 12" WATERLINE PER (C/D8) (D/D8) (E/D8)
3. BEND (90°, 45°, 221/2°, ETC.) WITH THRUST BLOCK. (A/D3)
4. BUTTERLY VALVE PER (C/D2)
5. BLOWOFF ASSEMBLY PER (C/D4)
6. TEE WITH THRUST BLOCK PER (A/D3)
7. CONNECT TO EXISTING 20" WATERLINE PER (A/D1)
8. MANWAY WITH AIR\VAC PER (A/D9) (C/D12)
9. MANWAY WITH AIR RELEASE PER (A/D11) (A/D13)
10. MANWAY PER (A/D16) (A/D19)
11. AIR\VAC VALVE PER (C/D16) (C/D12)
12. EPHEMERAL WASH CROSSING PER (A/D4)
13. CONNECT TO EXISTING 18" WATERLINE PER (A/D8)
14. CLAY CUT-OFF WALL PER (A/D5)
15. 2-PIECE BEND (A/D3)
16. 3-PIECE BEND (A/D3)
17. JIM BRIDGER PIPELINE CROSSING (A/D7) (B/D7)
18. GATE VALVE PER DETAIL (D/D2)
19. WEAK SOILS CROSSING (E/D1)
20. CONCRETE PIPELINE ANCHOR (D/D13)
21. 30"x12" CROSS WITH THRUST BLOCK PER (A/D3)
22. CHECK VALVE VAULT (A/D8) (B/D8)
23. EROSION BLANKET PER (F/D18) (G/D18)
24. SEDIMENT LOG/WATTLE PER (A/D18) (B/D18)
25. FIRE HYDRANT PER (F/D5)

NORTH

SCALE
0 40' 80'
HORIZ: 1" = 80'

811 Know what's below. Call before you dig. 1-800-849-2476

SUNRISE ENGINEERING
770 S WASHINGTON ST.
AFTON, WYOMING 83110
TEL 307.885.8500 · FAX 307.885.8501
www.sunrise-eng.com

GR–RS–SC JPWB

CROSSROADS PUMP STATION

PLAN AND PROFILE

SEI NO.	DESIGNED	DRAWN	CHECKED	SHEET NO.	
07265	FDK	BJ	JJL	29 of 99	PP15

P:\WWDC GR-RS-SC JPWB Cross Roads Pump Station Level III (507265)\Dwg C3D\Sheets\Plan & Profile2.dwg Feb 13, 2026 9:38am bjenkins

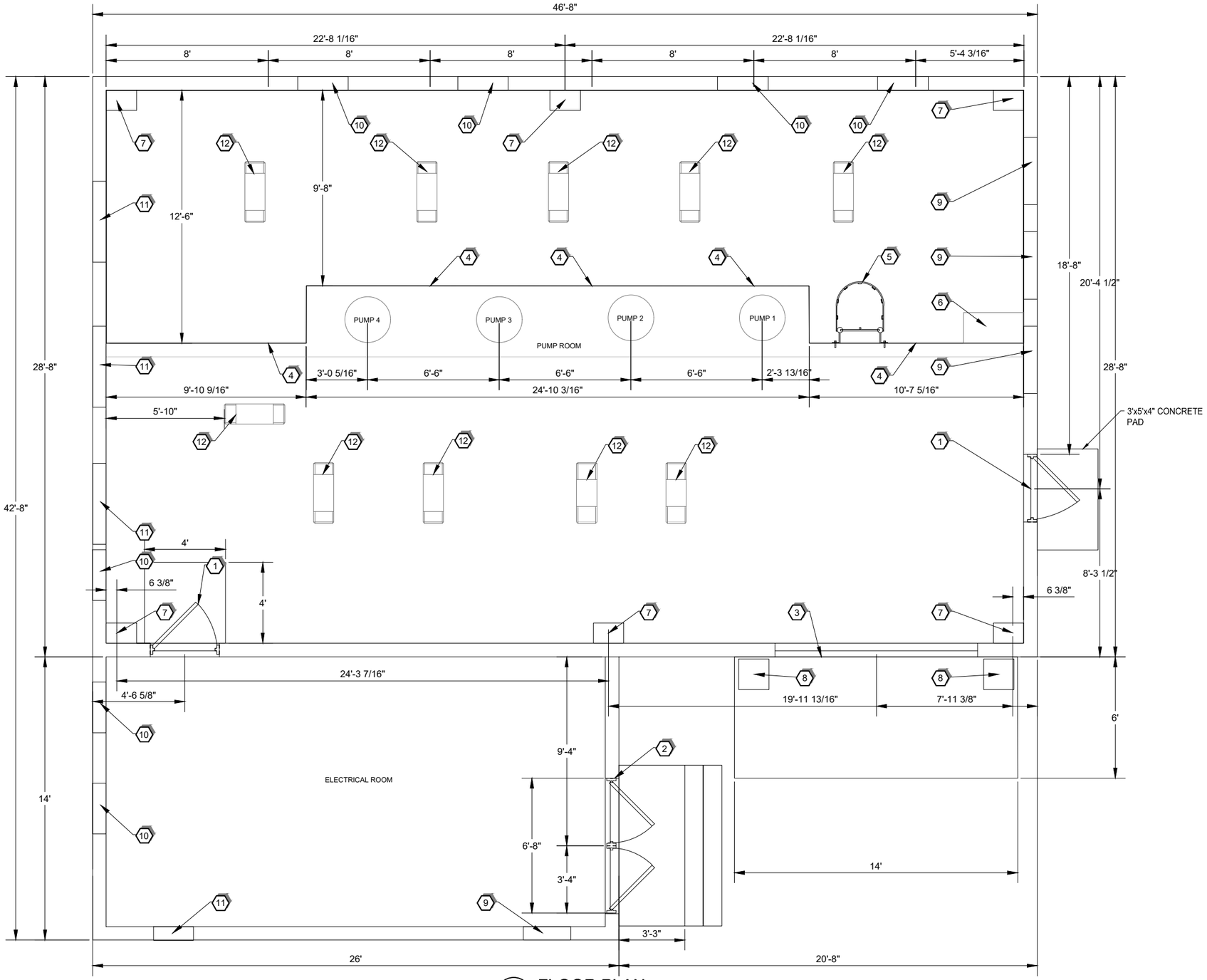

A FLOOR PLAN
3/16" = 1'

1. 3'x7' SINGLE DOOR
2. 6'x7' DOUBLE DOOR
3. 10'x12' ROLL UP DOOR DETAIL H, S8
4. GRATE SUPPORT, DETAIL E, S9
5. LADDER DETAIL I,H, S9
6. SUMP PIT DETAIL I, D8
7. HOIST BASE, DETAIL D, S7
8. BOLLARDS, DETAIL C, S5
9. LOUVER, SEE LOUVER SCHEDULE, M1
10. AIR HANDLER, SEE AIR HANDLER SCHEDULE, M1
11. FAN, SEE FAN SCHEDULE, M1
12. SUPPORT SADDLE, DETAIL E, S6

NOTE: ALL WALLS ARE 8" CMU

NORTH

REV NO.	COMMENT	DATE

SUNRISE ENGINEERING
770 S WASHINGTON ST.
AFTON, WYOMING 83110
TEL 307.885.8500 - FAX 307.885.8501
www.sunrise-eng.com

GR-RS-SC JPWB

CROSSROADS PUMP STATION

FLOOR PLAN

SEI NO.	DESIGNED	DRAWN	CHECKED	SHEET NO.	
07265	FDK	BJ	JJL	30 of 99	A1

P:\WWDC GR-RS-SC JPWB Cross Roads Pump Station Level III (S07265)\Dwg C3D\Pump Station\Details\Pump Station Layout.dwg Feb 13, 2026 9:38am bjenkins

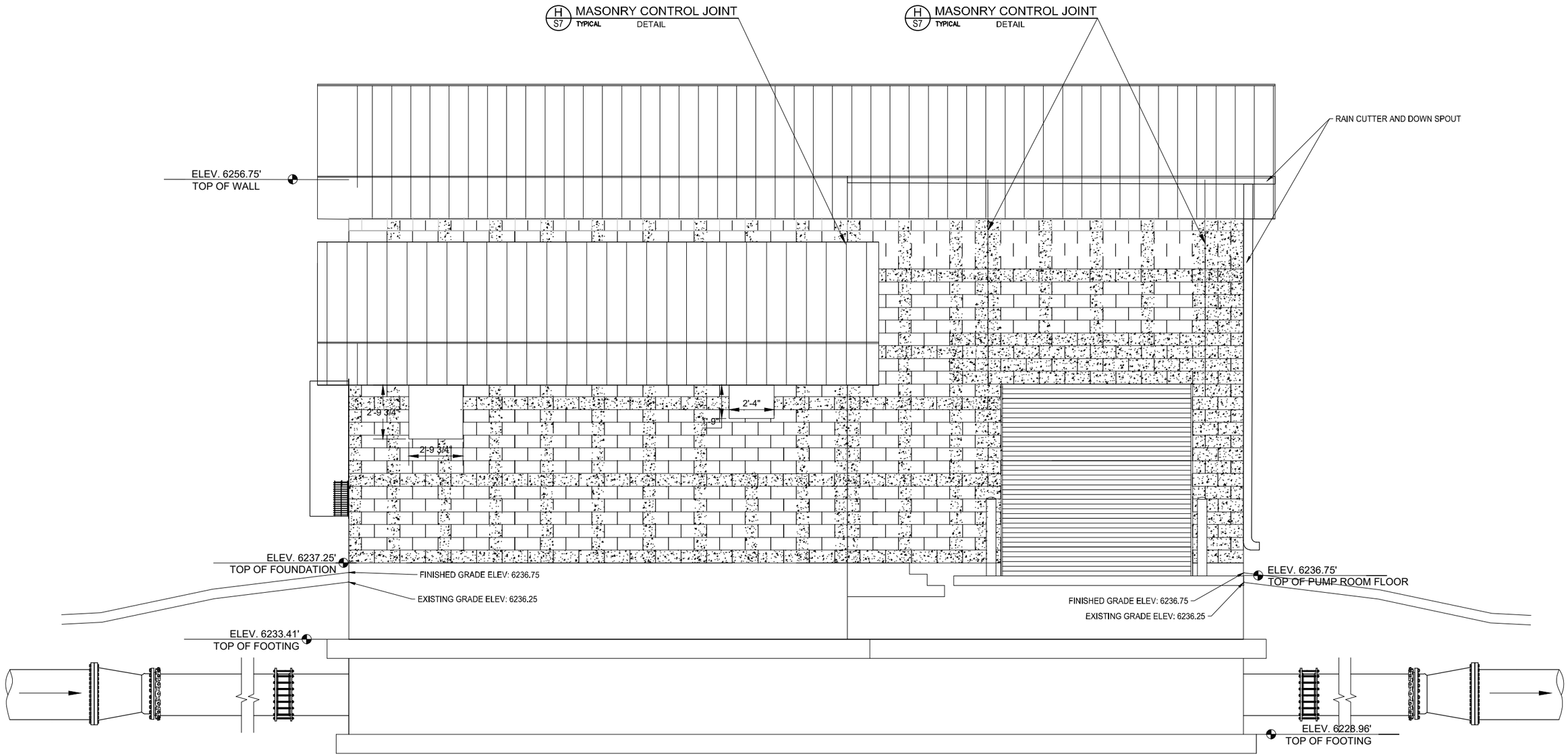

A ~ SOUTH SIDE OF PUMP STATION
3/16" = 1' ELEVATION VIEW

REV NO.	COMMENT	DATE

SUNRISE ENGINEERING
770 S WASHINGTON ST.
AFTON, WYOMING 83110
TEL 307.885.8500 · FAX 307.885.8501
www.sunrise-eng.com

GR-RS-SC JPWB

CROSSROADS PUMP STATION

BUILDING ELEVATIONS

SEI NO.	DESIGNED	DRAWN	CHECKED	SHEET NO.	
07265	FDK	BJ	JJL	31 of 99	A2

P:\WWDC GR-RS-SC JPWB Cross Roads Pump Station Level III (S07265)\Dwg C3D\Pump Station\Details\Pump Station Layout.dwg Feb 13, 2026 9:38am bjenkins

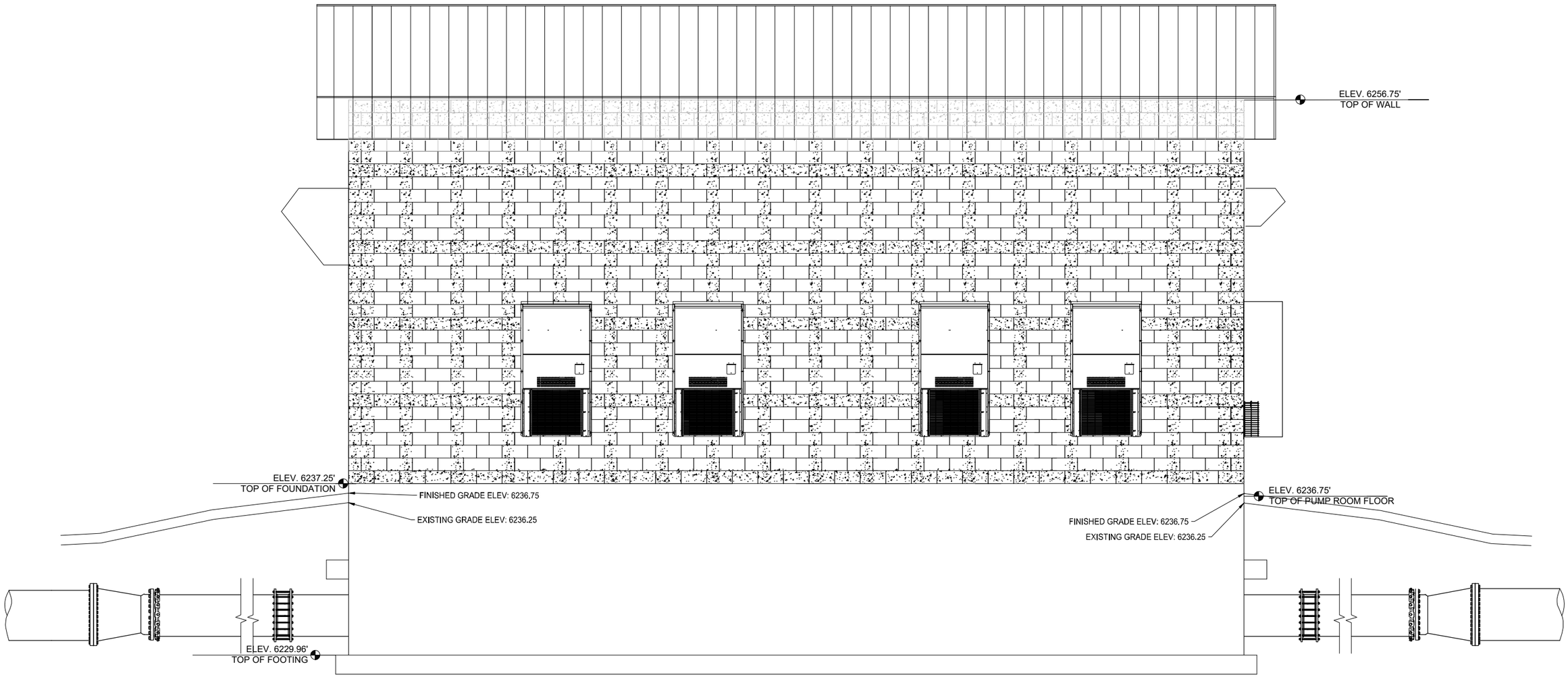

A
~

NORTH SIDE OF PUMP STATION

3/16" = 1' ELEVATION VIEW

REV NO.	COMMENT	DATE

SUNRISE ENGINEERING
770 S WASHINGTON ST.
AFTON, WYOMING 83110
TEL 307.885.8500 · FAX 307.885.8501
www.sunrise-eng.com

GR–RS–SC JPWB

CROSSROADS PUMP STATION

BUILDING ELEVATIONS

SEI NO.	DESIGNED	DRAWN	CHECKED	SHEET NO.	
07265	FDK	BJ	JJL	32 of 99	A3

P:\WWDC GR-RS-SC JPWB Cross Roads Pump Station Level III (S07265)\Dwg C3D\Pump Station\Details\Pump Station Layout.dwg Feb 13, 2026 9:38am bjenkins

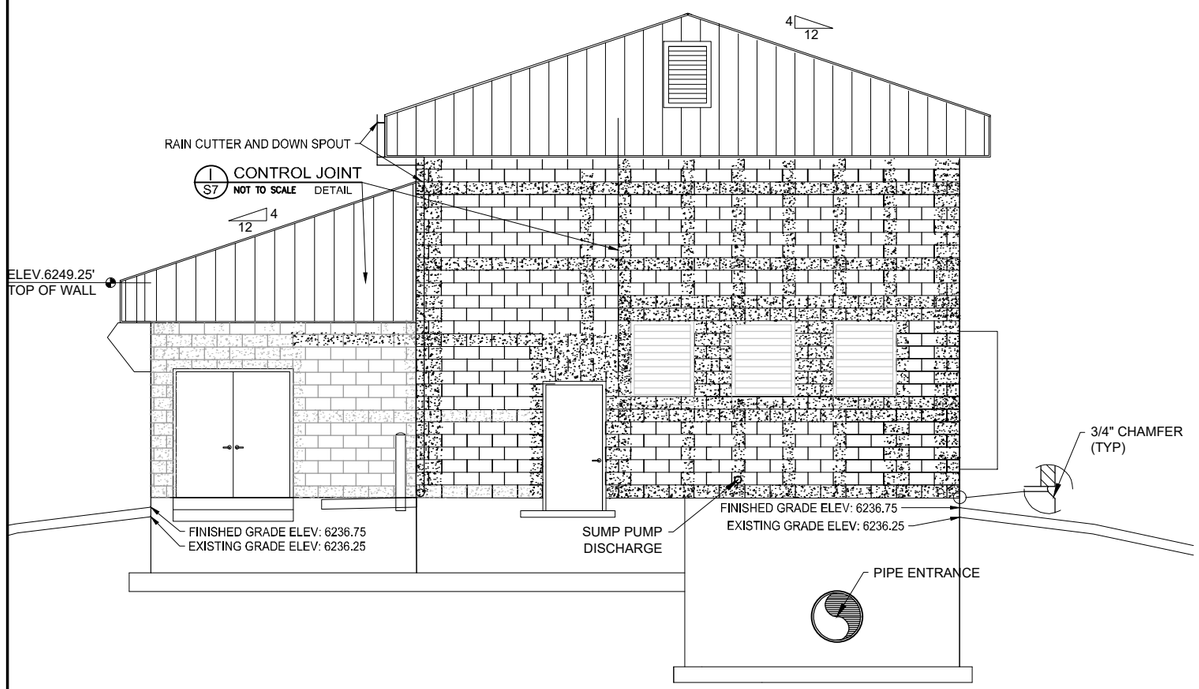

A ~ FRONT OF PUMP STATION
1/8" = 1' ELEVATION VIEW

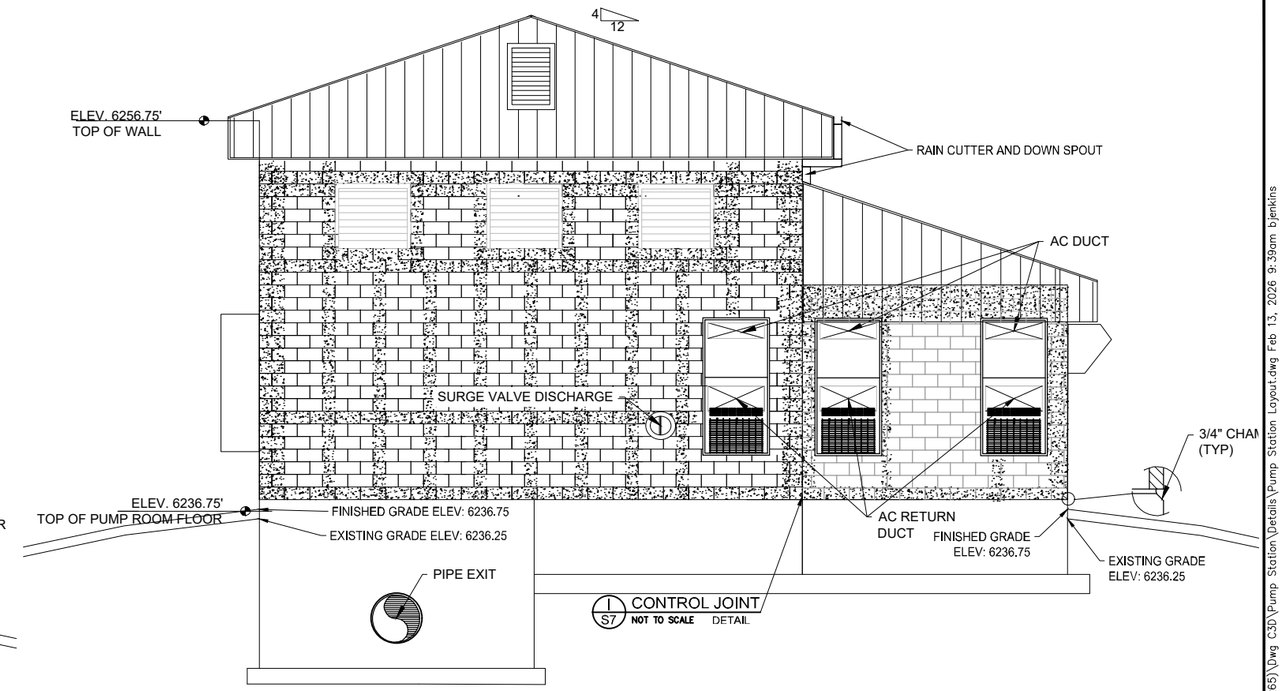

B ~ WEST SIDE OF PUMP STATION
1/8" = 1' ELEVATION VIEW

P:\WWDC GR-RS-SC JPWB Cross Roads Pump Station Level III (S07265)\Dwg C3D\Pump Station\Details\Pump Station Layout.dwg Feb 13, 2026 9:39am bjenkins

REV NO.	COMMENT	DATE

SUNRISE ENGINEERING
770 S WASHINGTON ST.
AFTON, WYOMING 83110
TEL 307.885.8500 · FAX 307.885.8501
www.sunrise-eng.com

GR-RS-SC JPWB

CROSSROADS PUMP STATION

BUILDING ELEVATIONS

SEI NO.	DESIGNED	DRAWN	CHECKED	SHEET NO.	
07265	FDK	BJ	JJL	33 of 99	A4

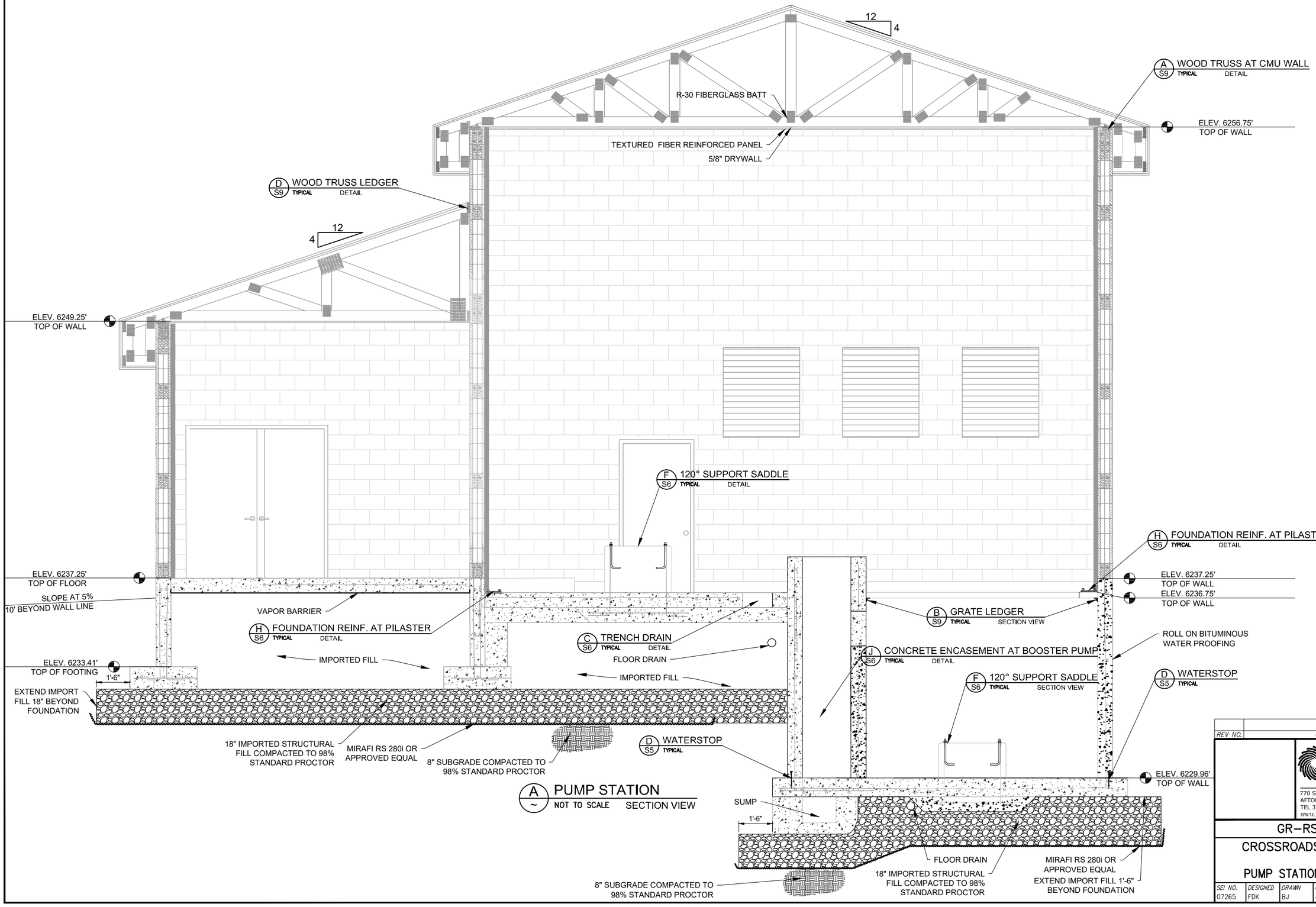

REV NO.	COMMENT	DATE

SUNRISE ENGINEERING
770 S WASHINGTON ST.
AFTON, WYOMING 83110
TEL 307.885.8500 · FAX 307.885.8501
www.sunrise-eng.com

GR-RS-SC JPWB

CROSSROADS PUMP STATION

PUMP STATION CROSS SECTION

SEI NO.	DESIGNED	DRAWN	CHECKED	SHEET NO.	
07265	FDK	BJ	JJL	34 of 99	A5

P:\WWDC GR-RS-SC JPWB Cross Roads Pump Station Level III (S07265)\Dwg C3D\Pump Station\Details\Pump Station Layout.dwg Feb 13, 2026 9:39am bjenkins

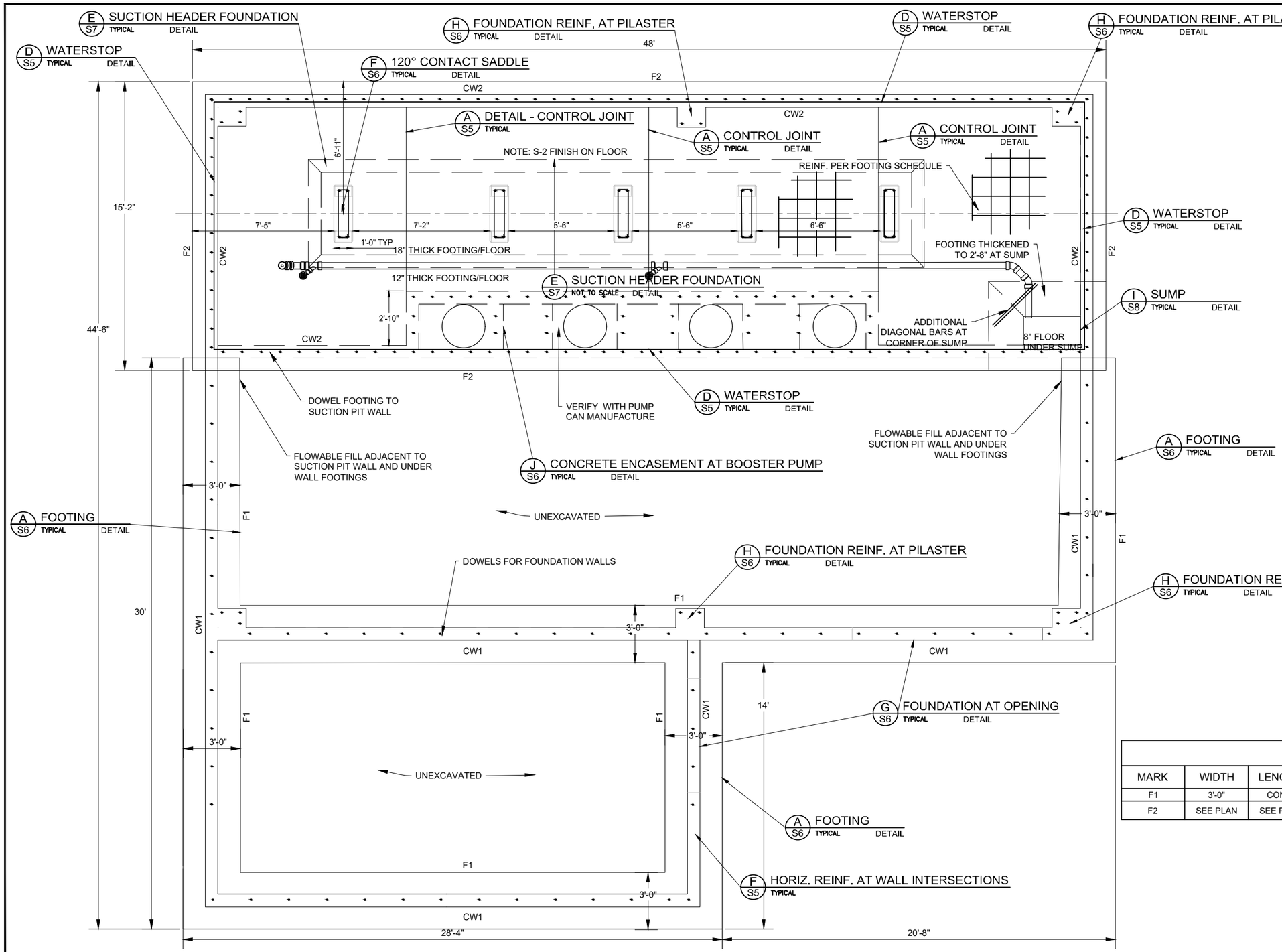

A TYP FOOTING AND SUCTION PIT FLOOR
3/16" = 1'

FOUNDATION REQUIREMENTS

1. VERIFY LOCATION AND SIZE OF ALL INSERTS AND OPENINGS IN SLAB, WALLS, AND FLOORS WITH MECHANICAL, PLUMBING, AND ELECTRICAL PRIOR TO CONSTRUCTION.
2. ALL FOOTINGS AND SLABS SHALL BE PLACED ON STRUCTURAL FILL AS DEFINED IN THE GEOTECHNICAL REPORT. THE MOISTURE CONTENT OF STRUCTURAL FILL SHALL BE CONDITIONED TO NEAR OPTIMUM WATER CONTENT, PLACED IN UNIFORM LIFTS NOT EXCEEDING 8 INCHES IN LOOSE THICKNESS, AND COMPACTED PER REQUIREMENTS OF THE GEOTECHNICAL REPORT.
3. ALL STANDARD WALL FOOTINGS SHALL EXTEND TO AT LEAST 48 INCHES BELOW FINISHED GRADE FOR FROST PROTECTION.
4. F1, F2, F3, ETC... DENOTES FOOTING PER FOOTING SCHEDULE ON THIS SHEET.
5. CW1, CW2, CW3, ETC... DENOTES CONCRETE WALL PER CONCRETE WALL SCHEDULE ON THIS SHEET.
6. CONCRETE CONTROL JOINTS SHALL BE AS SHOWN ON THESE DRAWINGS AND PER THE REFERENCED DETAILS.
7. CONCRETE CONTRACTOR TO REFER TO SHEET S2 FOR REQUIRED REINFORCEMENT TO MATCH MASONRY REINFORCEMENT.
8. PLACE SLABS ON GRADE OVER VAPOR BARRIER (AS REQ'D) PER THE GEOTECHNICAL REPORT.
9. BASEMENT CONCRETE SLAB SHALL BE 12 INCHES THICK WITH REINFORCEMENT AS SHOWN IN THE FOOTING SCHEDULE, UNLESS NOTED OTHERWISE.
10. FOR SMALL PIPES/CONDUITS, THROUGH FOUNDATION WALLS AND FOOTINGS, SEE PIPING PLANS.
11. CONCRETE LAP SPLICE REQUIREMENTS PER ACI 350.

FOOTING SCHEDULE

MARK	WIDTH	LENGTH	THICKNESS	REINFORCEMENT	BOT OF FOOTING ELEV
F1	3'-0"	CONT.	1'-0"	(4) #5 CONT. AT BOTTOM	6232.41'
F2	SEE PLAN	SEE PLAN	1'-0"	#6 AT 10" OC BOTH WAYS TOP AND BOTTOM	6227.96'

CONCRETE WALL SCHEDULE

MARK	THICKNESS	HEIGHT	VERT REINFORCING	HORIZ REINFORCING	TOP OF WALL ELEV
CW1	8"	4'-0"	#5 AT 16" O.C. "CENTERED"	#5 AT 18" O.C. "CENTERED"	6236.75'
CW2	8"	9'-0"	#5 AT 16" O.C. "CENTERED"	#5 AT 18" O.C. "CENTERED"	6236.75'

REV NO.	COMMENT	DATE

SUNRISE ENGINEERING
770 S WASHINGTON ST.
AFTON, WYOMING 83110
TEL 307.885.8500 · FAX 307.885.8501
www.sunrise-eng.com

GR-RS-SC JPWB

CROSSROADS PUMP STATION

FOOTINGS AND FOUNDATION PLAN

SEI NO.	DESIGNED	DRAWN	CHECKED	SHEET NO.	
07265	FDK	BJ	JJL	35 of 99	S1

P:\WWDC GR-RS-SC JPWB Cross Roads Pump Station Level III (S07265)\Dwg C3D\Pump Station\Details\Pump Station Layout.dwg Feb 13, 2026 9:39am bjenkins

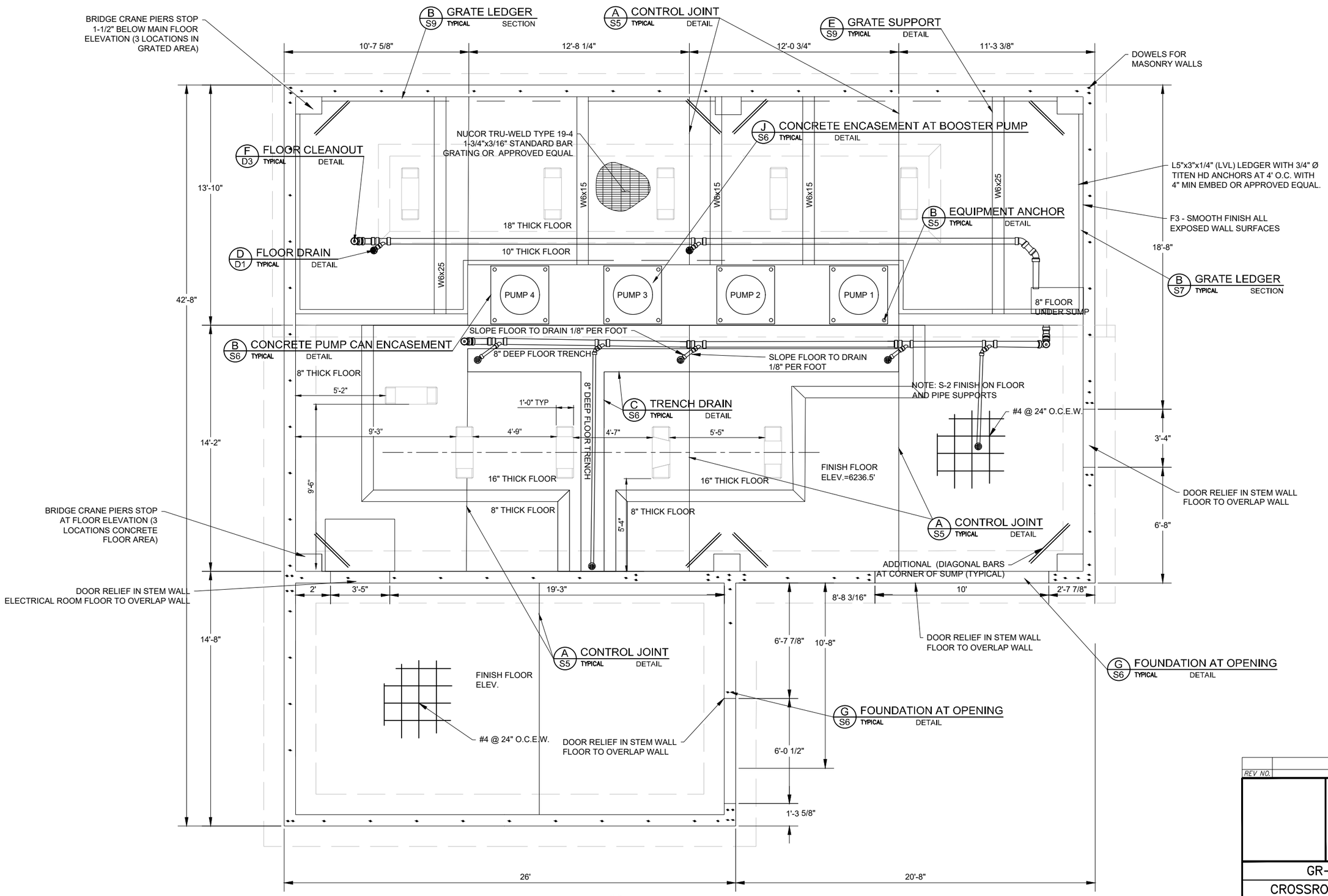

- NOTE: ELECTRICAL CONDUIT STUB UPS ARE NOT SHOWN

A ~ FOUNDATION & MAIN FLOOR

REV NO.	COMMENT	DATE

SUNRISE ENGINEERING
770 S WASHINGTON ST.
AFTON, WYOMING 83110
TEL 307.885.8500 · FAX 307.885.8501
www.sunrise-eng.com

GR–RS–SC JPWB

CROSSROADS PUMP STATION

FOOTINGS AND FOUNDATION PLAN

SEI NO.	DESIGNED	DRAWN	CHECKED	SHEET NO.	
07265	FDK	BJ	JJL	36 of 99	S2

P:\WWDC GR-RS-SC JPWB Cross Roads Pump Station Level III (S07265)\Dwg C3D\Pump Station\Details\Pump Station Layout.dwg Feb 13, 2026 9:39am bjenkins

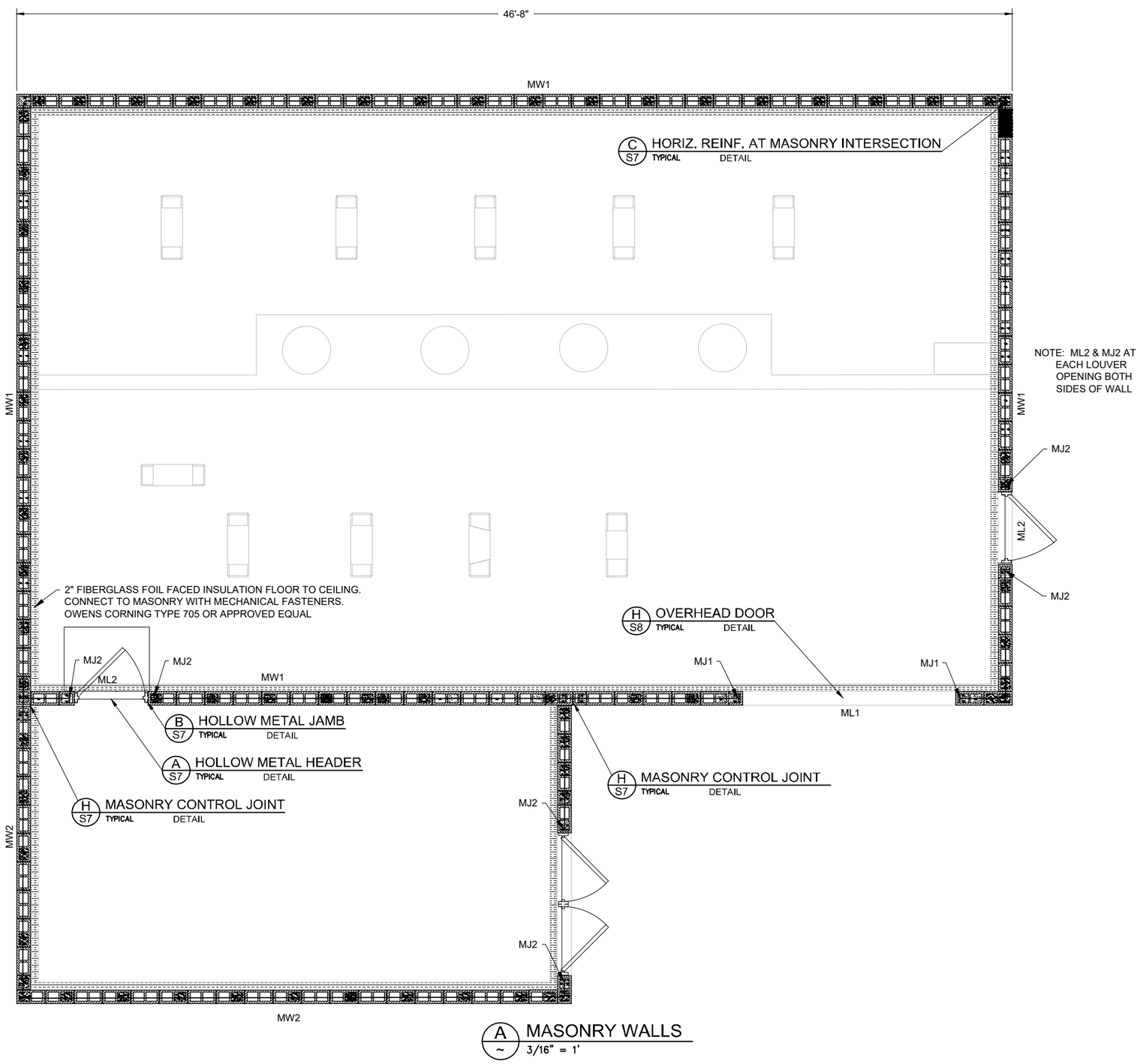

MASONRY REQUIREMENTS

1. ML DENOTES MASONRY LINTEL PER (E/S8)
2. MJ DENOTES MASONRY JAMB PER (B/S7)
3. MASONRY CONTROL JOINTS (MCJ) SHALL BE PLACED IN MASONRY WALLS WHERE SPECIFICALLY SHOWN ON DRAWINGS AND AT ALL INTERIOR TO EXTERIOR WALL INTERSECTIONS. SEE (H/S7) TO COORDINATE EXACT LOCATION OF CONTROL JOINTS WITH CIVIL PLANS.
4. SEE DETAIL (A/S7) FOR VERTICAL REINFORCEMENT REQUIREMENTS AT CORNERS. SEE NOTE ON THIS PAGE, AND DETAIL (C/S7) FOR HORIZONTAL REINFORCEMENT REQUIREMENTS AT WALL AND INTERSECTIONS.
5. VERIFY ALL DIMENSIONS, ELEVATIONS, SLOPES, ETC W/ ARCHITECTURAL AND/OR CIVIL PLANS PRIOR TO CONSTRUCTION. RESOLVE DISCREPANCIES AND CONFLICTS WITH ENGINEER OF RECORD.
6. REINFORCING IN MASONRY WALL SHALL BE LAPPED WITH REINFORCEMENT FROM CONCRETE WALL BELOW.
7. HORIZONTAL REINFORCING IN WALL SHALL BE CONTINUOUS, EXCEPT AT CONTROL JOINTS. BOND BEAMS AT TOP AND BOTTOM OF WALL TO RUN CONTINUOUS THROUGH CONTROL JOINTS.
8. EXTERIOR WALLS AND PUMP ROOM SEPARATION WALL SHALL BE SOLID GROUTED. INTERIOR WALLS TO BE GROUTED AT ALL VERTICAL REINFORCING AND BOND BEAMS PER GENERAL STRUCTURAL NOTES, UNLESS NOTED OTHERWISE.
9. ANCHOR BOLTS AT TOPS OF WALL SHALL BE PER MASONRY WALL SCHEDULE.
10. SEE MASONRY REINFORCING SPLICE SCHEDULE (G/S7)

MASONRY WALL REINFORCEMENT NOTE:

MASONRY WALL UNITS SHALL BE 10"X 8"X 16" CMU
TYPICAL VERTICAL REINFORCEMENT SHALL BE #5 WITH SPACING SHOWN ON TABLE. (S7, DETAIL A) MASONRY LINTEL AND JAMB TABLES PROVIDED AND SHOWN ON DRAWINGS. PROVIDE (1) #5 IN BOND BEAM AT BOTTOM, AT 4'-8", 8'-8", 12-8" AND 16-8" LIFTS FOR HORIZONTAL REINFORCEMENT. PROVIDE (2) #5 IN BOND BEAM AT TOP COURSE OF WALL.

REV NO.	COMMENT	DATE

SUNRISE ENGINEERING
770 S WASHINGTON ST.
AFTON, WYOMING 83110
TEL 307.885.8500 - FAX 307.885.8501
www.sunrise-eng.com

GR-RS-SC JPWB

CROSSROADS PUMP STATION
MASONRY WALL
LAYOUT AND REINFORCEMENT

SEI NO.	DESIGNED	DRAWN	CHECKED	SHEET NO.	
07265	FDK	BJ	JJL	37 of 99	S3

P:\WWDC GR-RS-SC JPWB Cross Roads Pump Station Level III (S07265)\Dwg C3D\Pump Station\Details\Pump Station Layout.dwg Feb 13, 2026 9:39am bjenkins

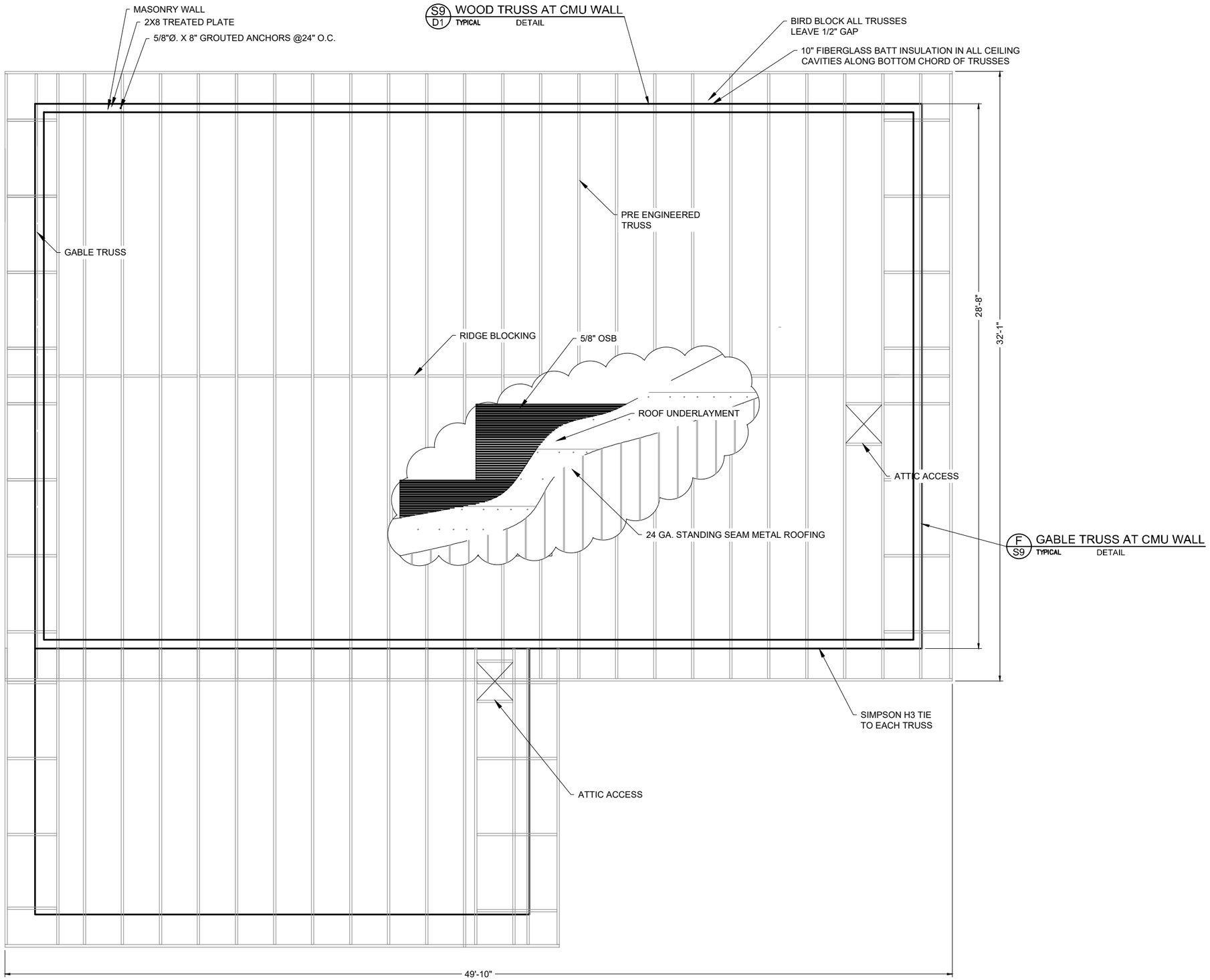

A TYP ROOF FRAMING PLAN
3/16" = 1'

ROOF FRAMING REQUIREMENTS

1. NOTIFY ENGINEER OF RECORD FOR PENETRATIONS THROUGH BEAMS, JOISTS, COLUMNS AND OTHER STRUCTURAL MEMBERS. PENETRATIONS SHALL COMPLY WITH THE REQUIREMENTS OF THE ENGINEER AND MANUFACTURER OF THE STRUCTURAL ELEMENT.
2. ALL BEAMS, HEADERS, JOISTS, AND TRUSSES SHALL HAVE SUFFICIENT BEARING AREA PER REQUIREMENTS OF THE AMERICAN WOOD COUNCIL NATIONAL DESIGN SPECIFICATION (NDS) 2018. ALL BEARING POINTS SHALL HAVE A CONTINUOUS LOAD PATH TO FOUNDATIONS.
3. ALL FINISHES SHALL BE PER THE OWNER. ENGINEER OF RECORD IS NOT RESPONSIBLE FOR WATER PROOFING AND CORROSION PROTECTION OF STRUCTURAL ELEMENTS. THIS RESPONSIBILITY FALLS SOLELY UPON THE CONTRACTOR.
4. ALL HARDWARE SHOWN ON THE DRAWINGS SHALL BE SIMPSON STRONG TIE OR APPROVED EQUAL.
5. ROOF FRAMING MEMBERS SHOWN ON DRAWINGS SHALL BE PREFABRICATED WOOD TRUSSES SPACED AT 24" OC, SEE THE GSN ROOF PITCH (4/12).
6. PROVIDE 1/2" PLYWOOD SHEATHING TO BOTTOM CHORD OF ROOF JOISTS/TRUSS W/ R-30 INSULATION BETWEEN EACH MEMBER.

ROOF SHEATHING REQUIREMENTS:

1- 5/8" OSB PLYWOOD OR OSB PER GSN
2- 8D AT 6" OC BOUNDARY FASTENERS (DIAPHRAGM BOUNDARIES, SHEAR PANEL BLOCKING, SOLID BLOCKING, AND DRAG MEMBERS AS NOTED ON FRAMING DETAILS)
3- 8D AT 6" OC EDGE FASTENERS (AT SUPPORTED PANEL EDGES)
4- 8D AT 12" OC FIELD FASTENERS (ALONG INTERMEDIATE FRAMING MEMBERS)
5- ALT FASTENERS #8 X 2" MIN ZINC COATED, FLAT/BUGLE HEAD SCREWS W/ SPACING NOTED ABOVE. SCREWS SHALL BE QUICK DRIVE WSNTL WOOD SCREWS, GRABBER PLYWOOD SCREWS, OR GRABBER COARSE THREAD SCREWS.

REV NO.	COMMENT	DATE

SUNRISE ENGINEERING
770 S WASHINGTON ST.
AFTON, WYOMING 83110
TEL 307.885.8500 · FAX 307.885.8501
www.sunrise-eng.com

GR–RS–SC JPWB

CROSSROADS PUMP STATION

ROOF FRAMING PLAN

SEI NO.	DESIGNED	DRAWN	CHECKED	SHEET NO.	
07265	FDK	BJ	JJL	38 of 99	S4

P:\WWDC GR-RS-SC JPWB Cross Roads Pump Station Level III (S07265)\Dwg C3D\Pump Station\Details\Pump Station Layout.dwg Feb 13, 2026 9:39am bjenkins

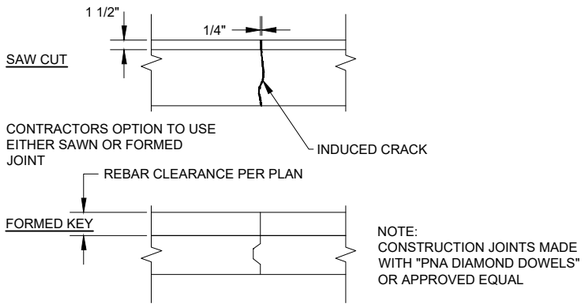

A ~ CONTROL JOINT IN SLAB
TYPICAL DETAIL

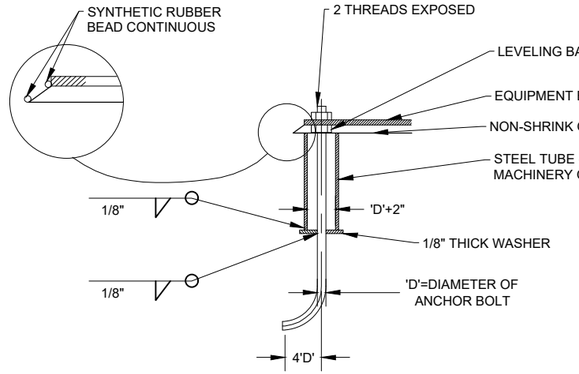

B TYP EQUIPMENT ANCHOR
TYPICAL DETAIL

NOTE:
ANCHOR BOLT SIZE AND LENGTH AS INDICATED ON THE DETAILED PLANS. IF SIZE AND LENGTH ARE NOT SPECIFIED ANCHOR BOLTS SHALL BE AS RECOMMENDED BY THE EQUIPMENT MFR. WHERE ANCHOR BOLT DEPTH CANNOT BE PROVIDED BECAUSE OF CONCRETE SLAB OR BEAM THICKNESS PROVIDE EXTRA THICKNESS IN SLAB OR BEAM TO ACCOMMODATE ANCHOR BOLT.

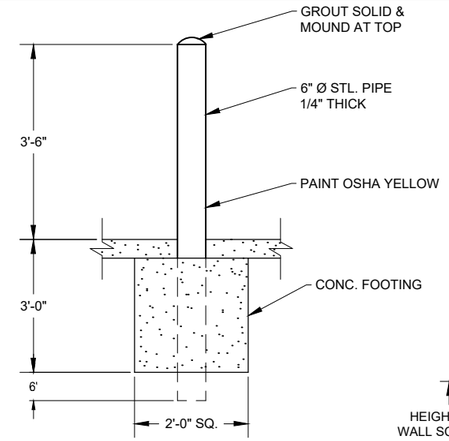

C ~ BOLLARD AT PUMP STATION
DETAIL

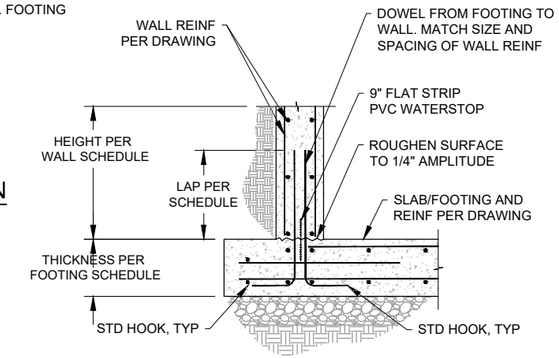

D TYP WATERSTOP
TYPICAL DETAIL

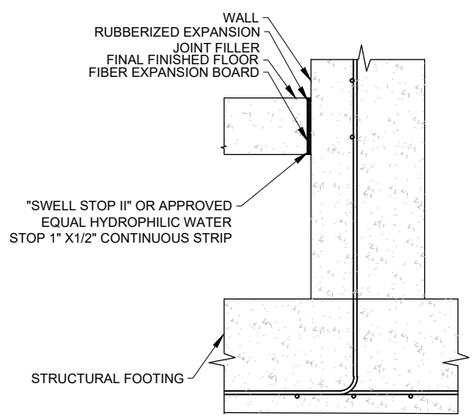

E TYP EXPANSION JOINT
TYPICAL DETAIL

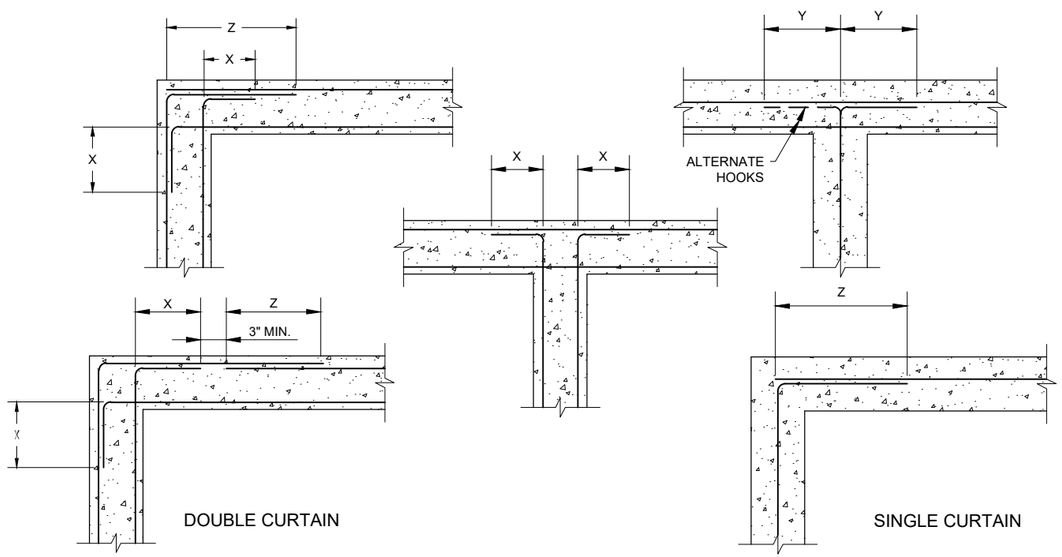

BAR SIZE	GRADE 40		GRADE 60	
	Y	Z	Y	Z
# 4	12"	20"	12"	20"
# 5	12"	20"	15"	26"
# 6	13"	22"	18"	31"

BAR SIZE	GRADE 40		GRADE 60	
	Y	Z	Y	Z
# 7	18"	31"	23"	39"
# 8	23"	39"	30"	51"
# 9	29"	49"	38"	65"

F ~ HORIZ. REINF. AT WALL INTERSECTIONS
TYPICAL DETAIL

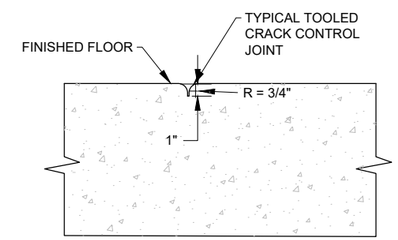

NOTE:
SPACE CONTROL & OR CONSTRUCTION JOINTS @ 25'-0" O.C. MAX. EA. WAY U.N.O. ON PLANS.

G TYP FLOOR CRACK CONTROL JOINT
TYPICAL DETAIL

TYPE	BAR SIZE	MIN. INSIDE BEND DIA. (IN)	STRAIGHT EXTENSION(1) ℓ_{ext} (IN)	TYPE OF STANDARD HOOK
90 DEG. HOOK	NO. 3 TO NO. 8	$6d_b$	$12d_b$	POINT AT WHICH BAR IS DEVELOPED; d_b; 90 DEG BEND; ℓ_{ext}; ℓ_{dh}
	NO. 9 TO NO. 11	$8d_b$		
	NO. 14 & NO. 18	$10d_b$		
180 DEG. HOOK	NO. 3 TO NO. 8	$6d_b$	GREATER OF $4d_b$ AND 2.5 IN.	POINT AT WHICH BAR IS DEVELOPED; d_b; 180 DEG BEND; DIAMETER; ℓ_{ext}; ℓ_{dh}
	NO. 9 TO NO. 11	$8d_b$		
	NO. 14 & NO. 18	$10d_b$		

(1)- A STANDARD HOOK FOR DEFORMED BARS IN TENSION INCLUDES THE SPECIFIC INSIDE BEND DIAMETER AND STRAIGHT EXTENSION LENGTH. IT SHALL BE PERMITTED TO USE A LONGER STRAIGHT EXTENSION AT THE END OF A HOOK. A LONGER EXTENSION SHALL NOT BE CONSIDERED TO INCREASE THE ANCHORAGE CAPACITY OF THE HOOK.

H ~ STD. HOOK GEOMETRY
TYPICAL DETAIL

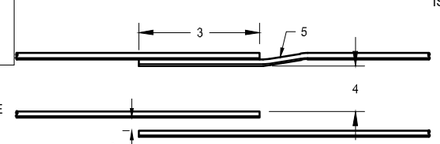

CONCRETE LAP AND DEVELOPMENT NOTES

* THIS DETAIL TO BE USED ONLY WHEN NO OTHER DETAIL IS INDICATED ON THE DRAWINGS.

1. TOP BARS ARE HORIZ. BARS PLACED SUCH THAT MORE THAN 12" OF FRESH CONCRETE IS CAST IN MEMBER BELOW SPLICE
2. WHERE BARS OF UNEQUAL SIZE LAP ONE ANOTHER, USE TABULATED LAP LENGTH FOR SMALLER BAR U.N.O.
3. LAP SPLICE LENGTH PER SCHEDULE
4. CLEAR DISTANCE BETWEEN ADJACENT BARS OR SPLICES TO BE USED IN DETERMINING APPLICABLE LAP LENGTH FROM SCHEDULE
5. OPTIONAL OFFSET. SEE STANDARD REBAR BEND DETAILS FOR OFFSET REQUIREMENTS
6. FOR NON-CONTACT LAP SPLICES, MIN. CLEAR DISTANCE BETWEEN SPLICED BARS SHALL BE PER GENERAL STRUCTURAL NOTES. MAX. CLEAR DISTANCE SHALL BE 1/5 THE TABULATED LAP LENGTH OR (6"- "DB"), WHICHEVER IS LESS, WHERE "DB" = BAR DIA.

REV NO.	COMMENT	DATE

SUNRISE ENGINEERING
770 S WASHINGTON ST.
AFTON, WYOMING 83110
TEL 307.885.8500 · FAX 307.885.8501
www.sunrise-eng.com

GR-RS-SC JPWB

CROSSROADS PUMP STATION

MASONRY BUILDING DETAILS

SEI NO.	DESIGNED	DRAWN	CHECKED	SHEET NO.	
07265	FDK	BJ	JJL	39 of 99	S5

P:\WMDC GR-RS-SC JPWB Cross Roads Pump Station Level III (S07265)\Dwg C3D\Pump Station\Details\Building Details.dwg Feb 13, 2026 9:39am bjenkins

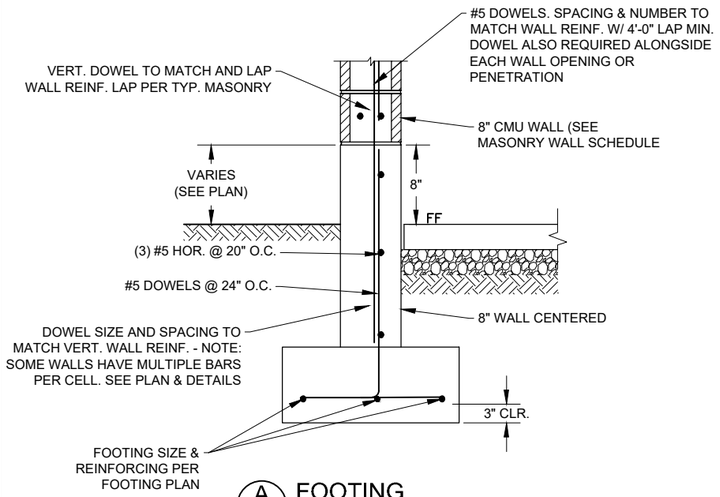

A ~ FOOTING
TYPICAL DETAIL

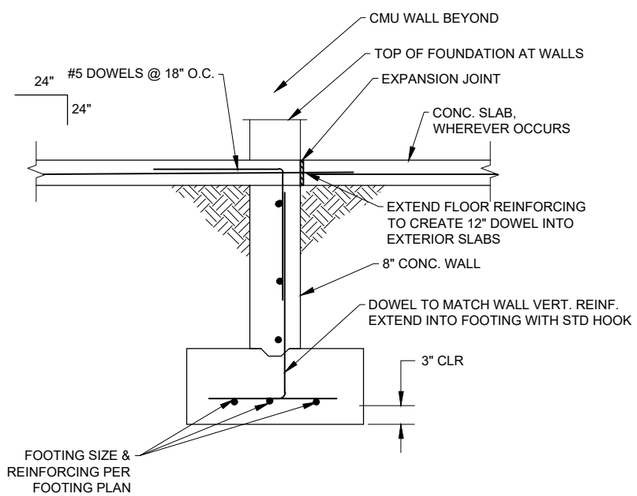

G ~ FOUNDATION AT OPENING
TYPICAL DETAIL

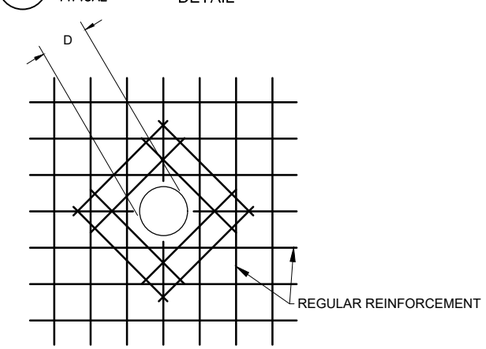

I ~ EXTRA REINF. AT PIPE PENETRATIONS
TYPICAL DETAIL

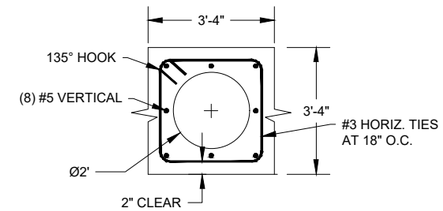

B ~ CONCRETE PUMP CAN ENCASEMENT
TYPICAL PLAN VIEW

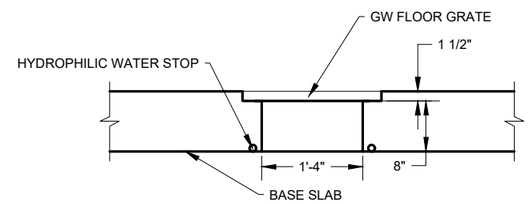

C ~ TRENCH DRAIN
TYPICAL DETAIL

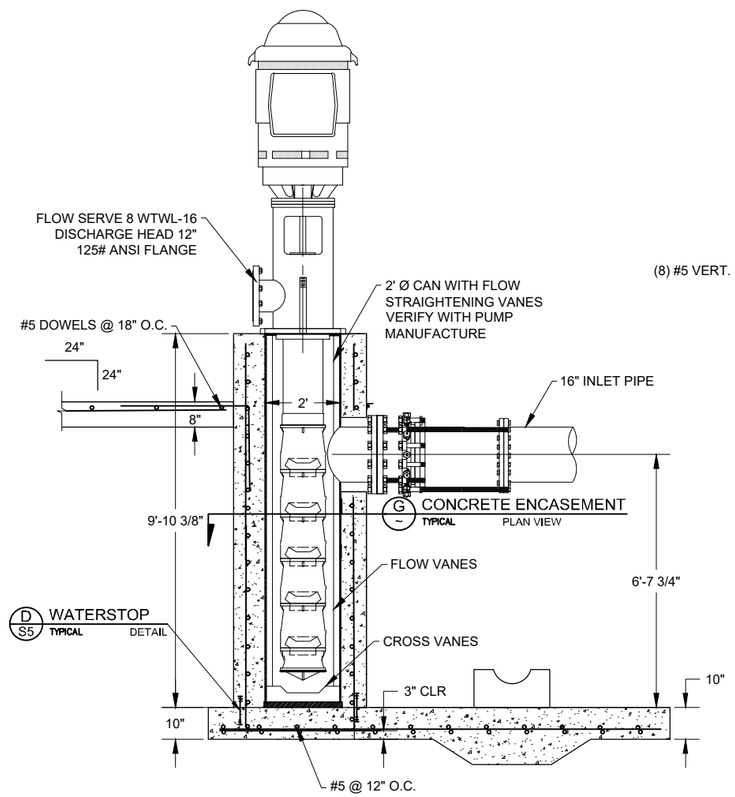

J ~ CONCRETE ENCASEMENT AT BOOSTER PUMP
TYPICAL ELEVATION VIEW

F ~ 120° SUPPORT SADDLE
TYPICAL SECTION VIEW

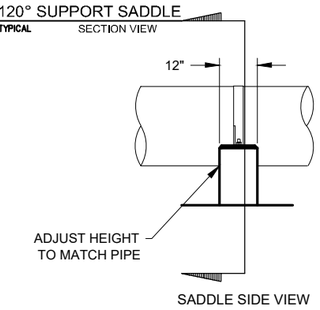

E ~ 120° SUPPORT SADDLE
TYPICAL ELEVATION VIEW

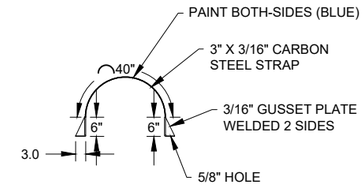

D ~ PIPE HOLD DOWN STRAP
TYPICAL DETAIL

D ~ PIPE HOLD DOWN STRAP
TYPICAL DETAIL

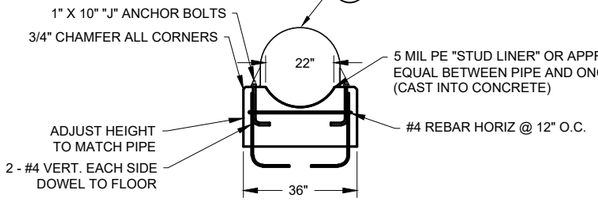

F ~ 120° SUPPORT SADDLE
TYPICAL SECTION VIEW

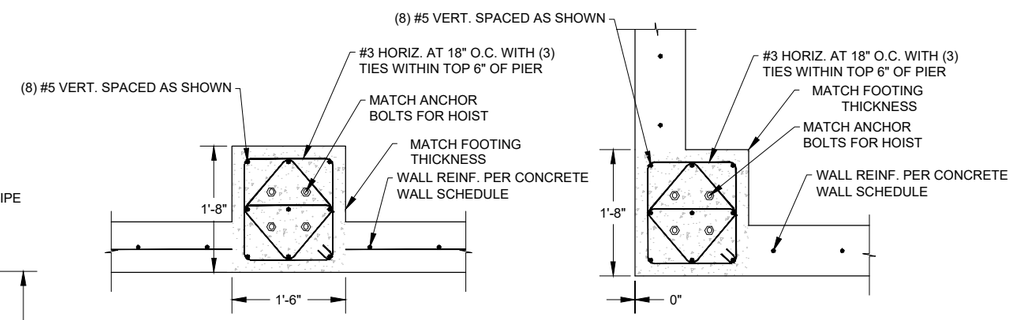

MID WALL PLAN VIEW

CORNER PLAN VIEW

H ~ FOUNDATION REINF. AT PILASTER
TYPICAL DETAIL

REV NO.	COMMENT	DATE

SUNRISE ENGINEERING
770 S WASHINGTON ST.
AFTON, WYOMING 83110
TEL 307.885.8500 · FAX 307.885.8501
www.sunrise-eng.com

GR–RS–SC JPWB

CROSSROADS PUMP STATION

MASONRY BUILDING DETAILS

SEI NO.	DESIGNED	DRAWN	CHECKED	SHEET NO.	
07265	FDK	BJ	JJL	40 of 99	S6

P:\WWDC GR-RS-SC JPWB Cross Roads Pump Station Level III (S07265)\Dwg C3D\Pump Station\Details\Building Details.dwg Feb 13, 2026 9:39am bjenkins

MASONRY WALL SCHEDULE					
MARK	VERT SPACING	GROUTING	NOM CMU SIZE	HEIGHT	ANCHORS AT TOP OF WALL
MW1	#5 AT 16" O.C.	FILL REINF. CELL	8"	20.67'	5/8" DIA AT 24" O.C.
MW2	#5 AT 32" O.C.	FILL REINF. CELL	8"	12.0'	5/8" DIA AT 24" O.C.
ALL MASONRY WALLS REQUIRE HORIZ. BOND BEAM WITH #5 AT 48" O.C. PROVIDE (2) #5 AT TOP AND BOTTOM OF WALL AND (1) #5 AT INTERMEDIATE BOND BEAMS.					

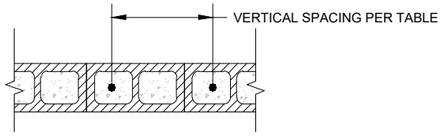

A ~ MASONRY WALL SCHEDULE
TYPICAL DETAIL

MARK	JAMB REINF.	(L) LENGTH
MJ1	(8) #5	2'-8"
MJ2	(4) #5	1'-4"

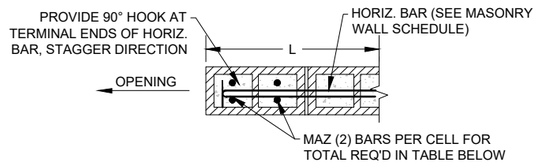

B ~ REINF. AT CMU JAMB
TYPICAL DETAIL

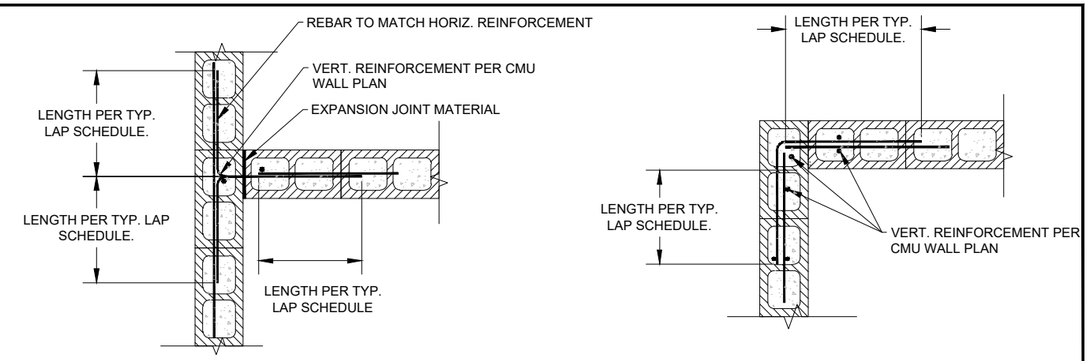

C ~ HORIZ. REINF. AT MASONRY INTERSECTION
TYPICAL DETAIL

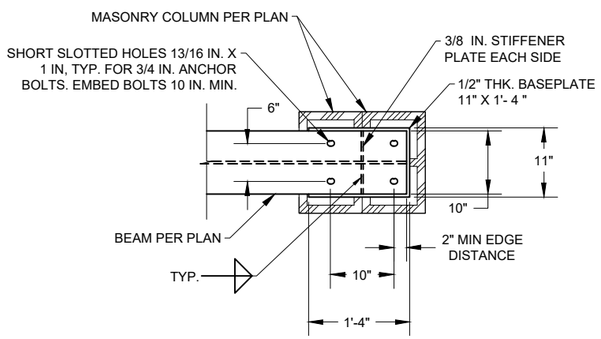

D ~ HOIST GIRDER AT CONCRETE COLUMN
TYPICAL DETAIL

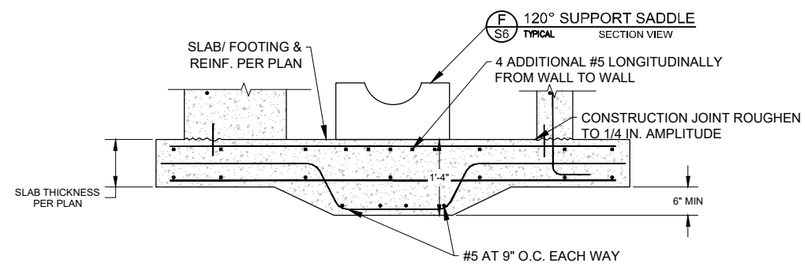

E ~ SUCTION HEADER FOUNDATION
TYPICAL DETAIL

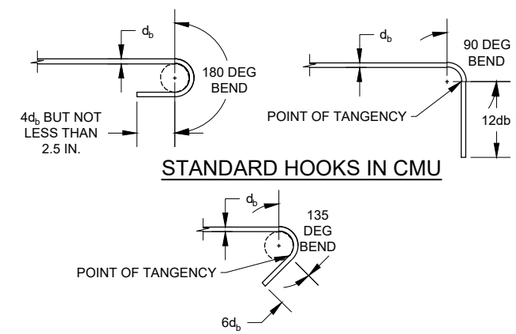

STANDARD HOOKS IN CMU

STANDARD HOOK FOR TIE ANCHORAGE IN CMU

F ~ STANDARD HOOK IN MASONRY
TYPICAL DETAIL

CONCRETE LAP AND DEVELOPMENT SCHEDULE

F'C = 4000 PSI				
	TENSION			
BAR SIZE #	LTE TOP (1)	LTE OTHER	LTS TOP (1)	LTS OTHER
#3	15	12	20	15
#4	20	16	26	20
#5	25	19	32	25
#6	30	23	39	30
#7	54	42	71	54
#8	62	48	81	62

* MASONRY REINFORCING SPLICE SCHEDULE
MIN. LAP SPLICE LENGTH, IN. BASED ON:

BAR SIZE	BAR CENTERED IN			1.5 IN. K= 2.0 IN	
	8 IN.	10 IN.	12 IN.		
3	16	16	16	19	16
4	21	21	21	34	26
5	26	26	26	53	40
6	43	40	40	99	74
7	60	46	46	134	101
8	NP	71	61	202	151

K IS DEFINED AS THE MINIMUM OF:
A) THE MIN MASONRY COVER
B) CLEAR SPACING BETWEEN ADJACENT REINFORCING SPLICES
C) 9db

G ~ MASONRY REINFORCING SPLICE SCHEDULE

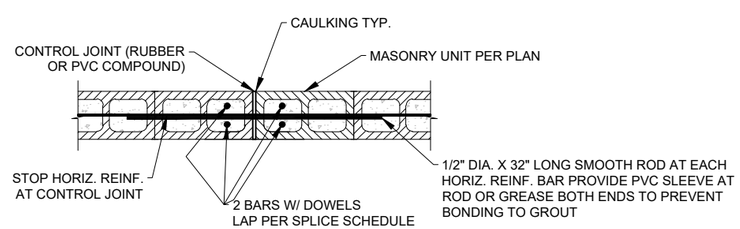

H ~ MASONRY CONTROL JOINT
TYPICAL DETAIL

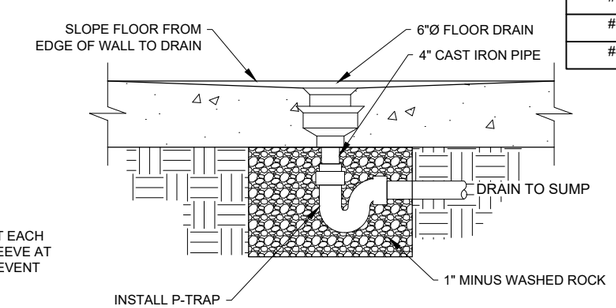

I ~ FLOOR DRAIN
TYPICAL DETAIL

REV NO.	COMMENT	DATE

SUNRISE ENGINEERING
770 S WASHINGTON ST.
AFTON, WYOMING 83110
TEL 307.885.8500 · FAX 307.885.8501
www.sunrise-eng.com

GR–RS–SC JPWB
CROSSROADS PUMP STATION
MASONRY BUILDING DETAILS

SEI NO.	DESIGNED	DRAWN	CHECKED	SHEET NO.	
07265	FDK	BJ	JJL	41 of 99	S7

P:\WMDC GR-RS-SC JPWB Cross Roads Pump Station Level III (S07265)\Dwg C3D\Pump Station\Details\Building Details.dwg Feb 13, 2026 9:39am bjenkins

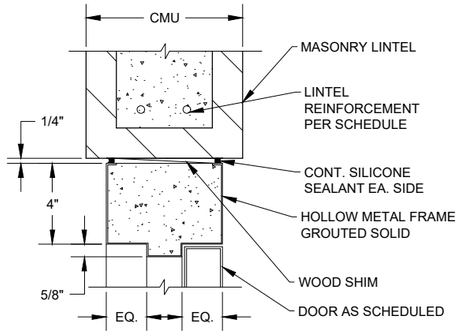

A TYP HOLLOW METAL HEADER
TYPICAL DETAIL

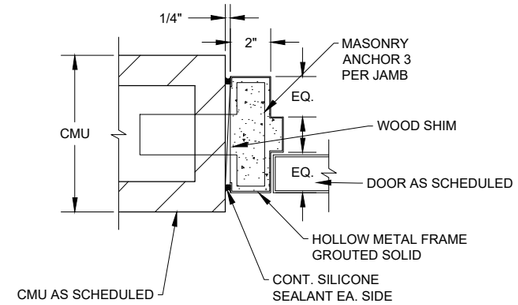

B TYP HOLLOW METAL JAMB
TYPICAL DETAIL

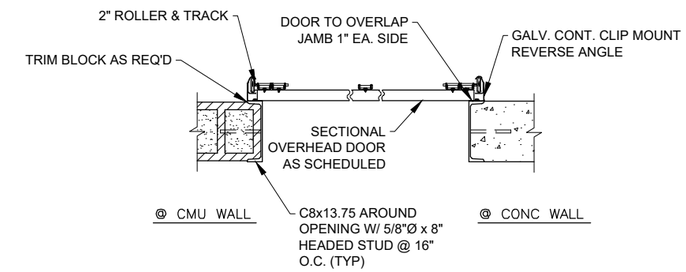

C TYP OVERHEAD DOOR JAMB
TYPICAL DETAIL

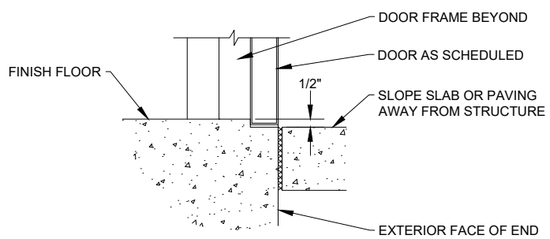

D S3 STL. ANGLE THRESHOLD
TYPICAL DETAIL

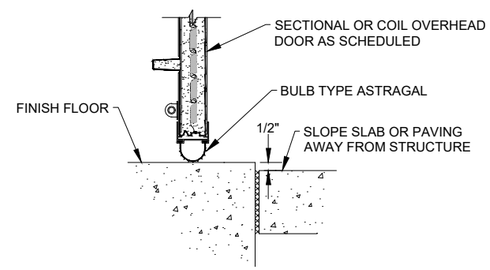

E S3 OVERHEAD DOOR THRESHOLD
TYPICAL DETAIL

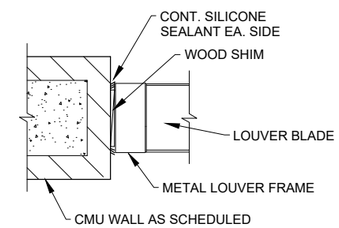

F TYP LOUVER JAMB/HEAD
TYPICAL DETAIL

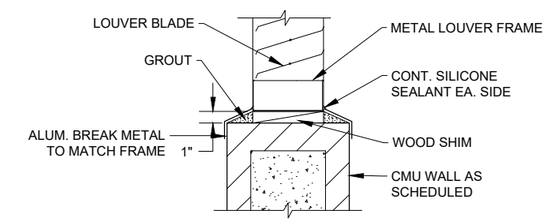

G TYP LOUVER SILL
TYPICAL DETAIL

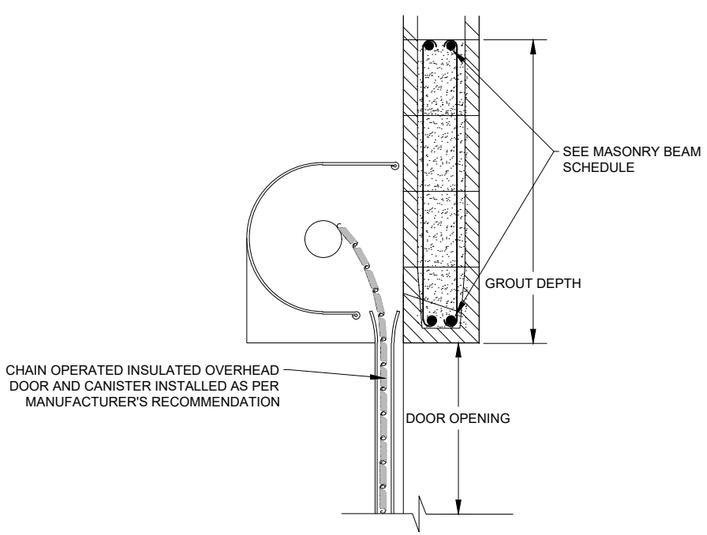

H S3 OVERHEAD DOOR
TYPICAL DETAIL

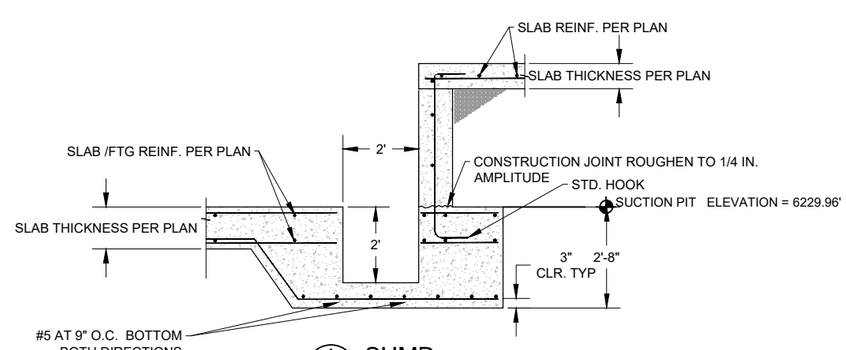

I ~ SUMP
TYPICAL DETAIL

MASONRY LINTEL SCHEDULE

MAX. SPAN	MIN DEPTH	NOMINAL WIDTH	REINFORCING TOP	REINFORCING BOTTOM	STIRRUPS	REMARKS
6'	24"	8"	(2) #4	(2) #5	N/A	
10'	32"	8"	(2) #4	(2) #5	N/A	

1. HORIZONTAL BARS SHALL RUN 24" PAST EACH SIDE OF OPENING.

2. VERTICAL WALL REINFORCING SHALL RUN THROUGH BEAM WITH 90° HOOK @ BOTTOM.

3. STIRRUPS SHALL HAVE 180° HOOKS AT TOP & BOTTOM. HOOKS SHOULD LOOP OVER/UNDER TOP/BOTTOM BARS. STAGGER DIRECTION OF STIRRUP.

REV NO.	COMMENT	DATE

SUNRISE ENGINEERING
770 S WASHINGTON ST.
AFTON, WYOMING 83110
TEL 307.885.8500 · FAX 307.885.8501
www.sunrise-eng.com

GR–RS–SC JPWB

CROSSROADS PUMP STATION

MASONRY BUILDING DETAILS

SEI NO.	DESIGNED	DRAWN	CHECKED	SHEET NO.	
07265	FDK	BJ	JJL	42 of 99	S8

P:\WWDC GR-RS-SC JPWB Cross Roads Pump Station Level III (S07265)\Dwg C3D\Pump Station\Details\Building Details.dwg Feb 13, 2026 9:39am bjenkins

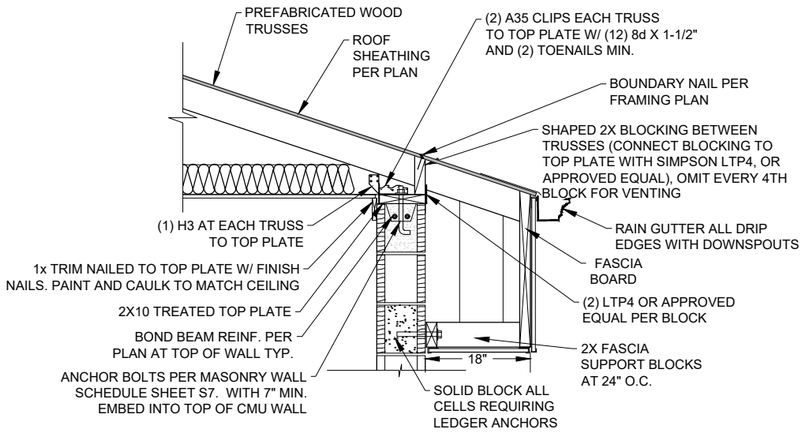

A / ~ WOOD TRUSS AT CMU WALL
TYPICAL DETAIL

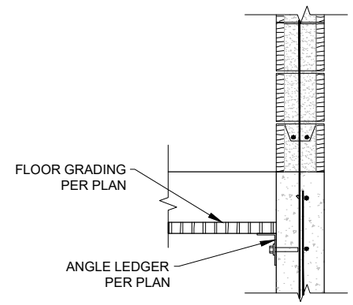

B / ~ GRATE LEDGER
TYPICAL SECTION VIEW

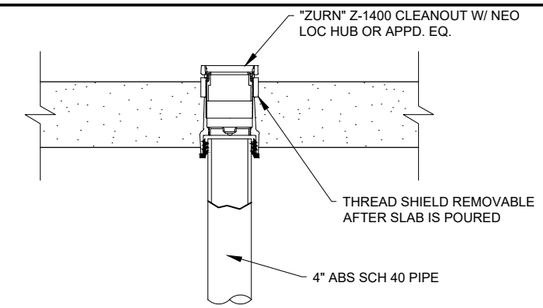

C / S2 FLOOR DRAIN CLEANOUT
TYPICAL DETAIL

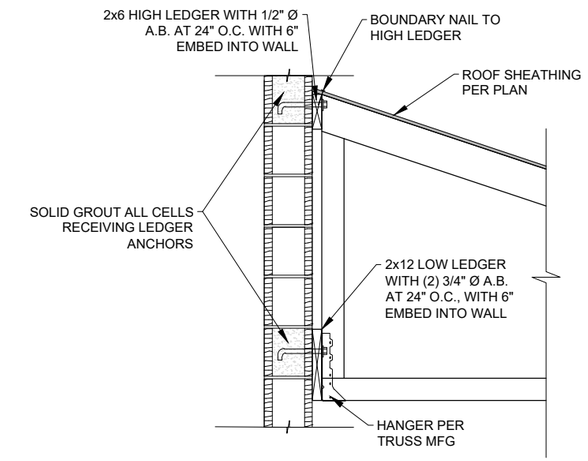

D / ~ WOOD TRUSS LEDGER
TYPICAL DETAIL

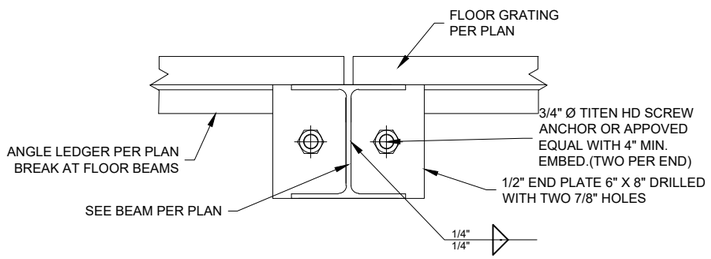

E / ~ GRATE SUPPORT
TYPICAL DETAIL

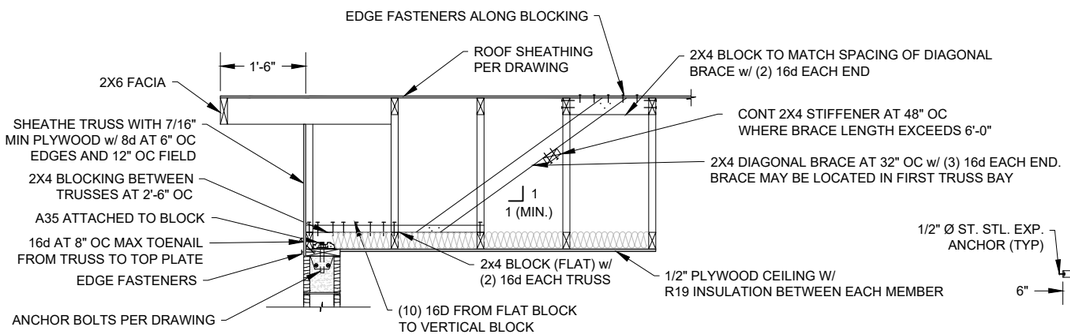

F / ~ GABLE TRUSS AT CMU WALL
TYPICAL DETAIL

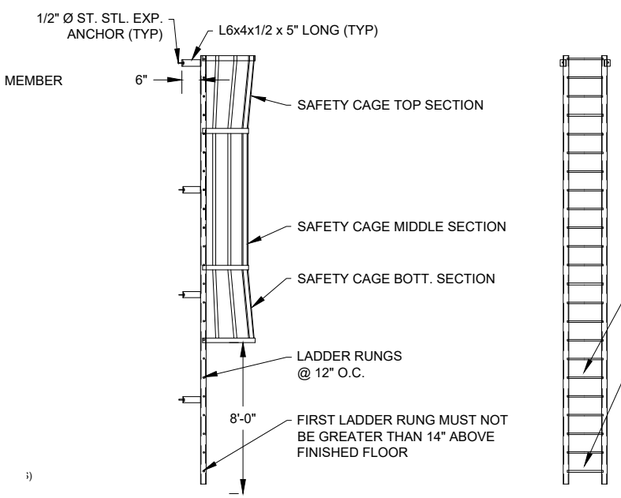

I / ~ LADDER
TYPICAL ELEVATION VIEW

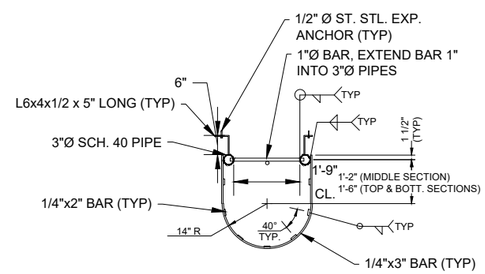

H / ~ LADDER
TYPICAL PLAN VIEW

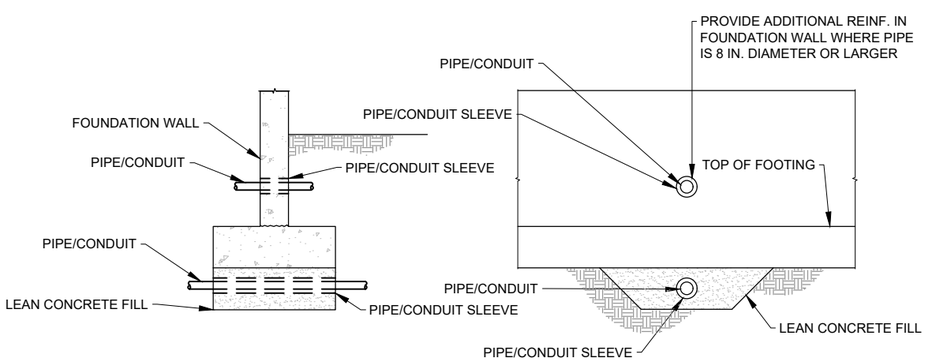

G / ~ PIPE/CONDUIT PENETRATIONS
TYPICAL DETAIL

LADDER NOTES:

1. ROOF HATCH SHALL BE 6'x4' 'BILCO' HATCH OR APPD. EQ. HINGED ON THE 6'-0" SIDE, MODIFIED TO OMIT INTERIOR AND EXTERIOR HANDLES, AND PROVIDED W/ CONCEALED PADLOCK HASP. ALL ST. STL. HARDWARE AND FULLY ENCLOSE CURB.
2. ROOF HATCH TO BE MANUFACTURED OF ALUMINUM.
3. ALL LADDER MATERIAL FOR PIPE SIDE RAILS, RUNGS, BRACKETS, AND BASE PLATES TO BE STAINLESS STEEL.
4. LADDER RUNGS TO BE SOLID RODS.
5. ALL WELDS TO BE 1/4" MIN.
6. ALL ALUM. IN CONTACT WITH CONCRETE MUST BE COATED WITH A HEAVY BITUMASTIC COATING OR EPOXY PAINT.
7. USE ST. STL. 316 FOR ALL BOLTS UNLESS NOTED OTHERWISE.
8. WHERE ST. STL. BOLTS ARE IN CONTACT WITH DISSIMILAR METALS, USE INSULATING SLEEVES AND PHENOLIC WASHERS TO ELECTRICALLY ISOLATE THE BOLTS.

REV NO.	COMMENT	DATE

SUNRISE ENGINEERING
770 S WASHINGTON ST.
AFTON, WYOMING 83110
TEL 307.885.8500 · FAX 307.885.8501
www.sunrise-eng.com

GR-RS-SC JPWB

CROSSROADS PUMP STATION

MASONRY BUILDING DETAILS

SEI NO.	DESIGNED	DRAWN	CHECKED	SHEET NO.	
07265	FDK	BJ	JJL	43 of 99	S9

P:\WMDC GR-RS-SC JPWB Cross Roads Pump Station Level III (S07265)\Dwg C3D\Pump Station\Details\Building Details.dwg Feb 13, 2026 9:39am bjenkins

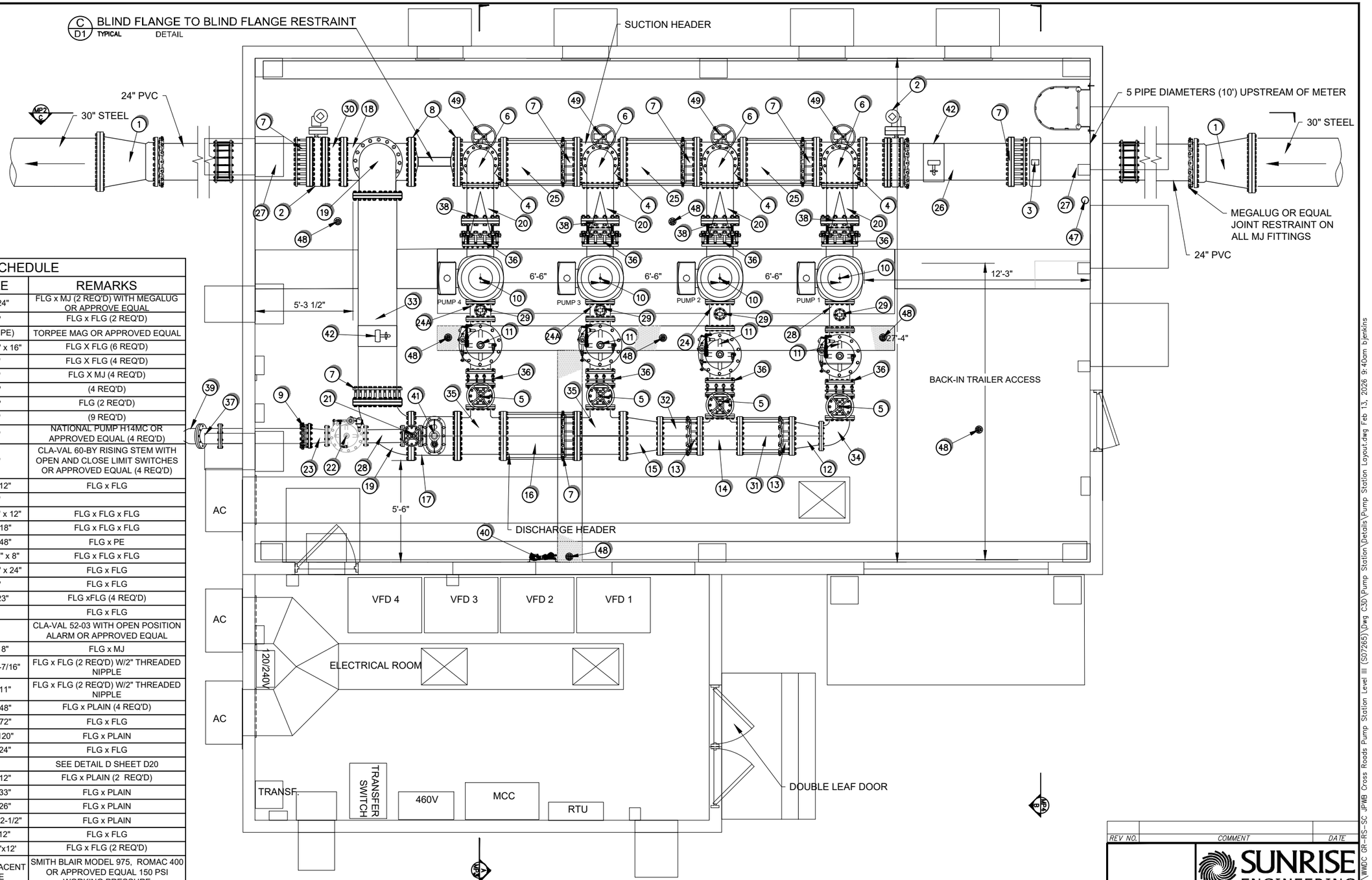

EQUIPMENT SCHEDULE

NO.	DESCRIPTION	SIZE	REMARKS
1	REDUCER	30"x24"	FLG x MJ (2 REQ'D) WITH MEGALUG OR APPROVE EQUAL
2	BUTTERFLY VALVE	24"	FLG x FLG (2 REQ'D)
3	INSERTION METER	24" (PIPE)	TORPEE MAG OR APPROVED EQUAL
4	REDUCING TEE	24" x 24" x 16"	FLG X FLG (6 REQ'D)
5	GATE VALVE	12"	FLG X FLG (4 REQ'D)
6	90° BEND	16"	FLG X MJ (4 REQ'D)
7	RESTRAINED FLANGED ADAPTER	24"	(4 REQ'D)
8	BLIND FLANGE (STEEL)	24"	FLG (2 REQ'D)
9	RESTRAINED FLANGED ADAPTER	10"	(9 REQ'D)
10	VERTICAL CAN PUMP	14"	NATIONAL PUMP H14MC OR APPROVED EQUAL (4 REQ'D)
11	PUMP CONTROL VALVE	12"	CLA-VAL 60-BY RISING STEM WITH OPEN AND CLOSE LIMIT SWITCHES OR APPROVED EQUAL (4 REQ'D)
12	REDUCER	18" x 12"	FLG x FLG
13	RESTRAINED FLANGED ADAPTER	18"	
14	REDUCING TEE	18" x 18" x 12"	FLG x FLG x FLG
15	REDUCER	24" x 18"	FLG x FLG x FLG
16	D. I. P.	24" x 48"	FLG x PE
17	REDUCING TEE	24" x 24" x 8"	FLG x FLG x FLG
18	TEE	24" x 24" x 24"	FLG x FLG
19	90° BEND	24"	FLG x FLG
20	D.I.P. SPOOL	16"x23"	FLG xFLG (4 REQ'D)
21	GATE VALVE	8"	FLG x FLG
22	SURGE ANTICIPATION VALVE	8"	CLA-VAL 52-03 WITH OPEN POSITION ALARM OR APPROVED EQUAL
23	REDUCER	10" x 8"	FLG x MJ
24	D.I.P. SPOOL	12" x 17-7/16"	FLG x FLG (2 REQ'D) W/2" THREADED NIPPLE
24A	D.I.P. SPOOL	12" x 11"	FLG x FLG (2 REQ'D) W/2" THREADED NIPPLE
25	D.I.P. SPOOL	24" x 48"	FLG x PLAIN (4 REQ'D)
26	D.I.P. SPOOL	24" x 72"	FLG x FLG
27	D.I.P. SPOOL	24" x 120"	FLG x PLAIN
28	D.I.P. SPOOL	12" x 24"	FLG x FLG
29	AIR RELEASE VALVE		SEE DETAIL D SHEET D20
30	D.I.P. SPOOL	10" x 12"	FLG x PLAIN (2 REQ'D)
31	D.I.P. SPOOL	18" x 33"	FLG x PLAIN
32	D.I.P. SPOOL	18" x 26"	FLG x PLAIN
33	D.I.P. SPOOL	24' x 11' 2-1/2"	FLG x PLAIN
34	90° BEND	12' x 12"	FLG x FLG
35	REDUCING TEE	24"x24"x12'	FLG x FLG (2 REQ'D)
36	DISMANTLING JOINT W/ RESTRAINT RODS	PER ADJACENT PIPE	SMITH BLAIR MODEL 975, ROMAC 400 OR APPROVED EQUAL 150 PSI WORKING PRESSURE
37	22.5° BEND	10"	FLG x FLG
38	CONE STRAINER	16"	1/2" OPENINGS (4 REQ'D)
39	DUCKBILL VALVE	10"	TIDEFLEX SERIES TF-2 RO APPROVED EQUAL
40	CHLORINE ANALYZER		
41	AIR\VAC	2"	SEE D SHEET D20
42	SAMPLE TAP	1/2'	SEE E SHEET D2
43	D.I.P. SPOOL	10" x 13"	FLG x PLAIN (4 REQ'D)
44	D.I.P. SPOOL	8"x 59"	FLG x PLAIN

EQUIPMENT SCHEDULE

NO.	DESCRIPTION	SIZE	REMARKS
45	D.I.P. SPOOL	8"x21"	FLG x FLG
46	TEE	8"	FLG x FLG
47	FLOOD SENSOR SWITCH		
48	FLOOR DRAIN		SEE I SHEET S7
49	BUTTERFLY VALVE	16"	
50	D.I.P. SPOOL	16"x13"	FLG x PE (4 REQ'D)
51	JOINT HARNESS	16"	(4 REQ'D)

NOTE:
D.I.P. SPOOLS ARE APPOXIMATE MEASUREMENTS FLG x FLG, TRIM TO FIT INFIELD.
ALL MJ CONNECTION SHALL BE RESTRAINED.

REV NO.	COMMENT	DATE

SUNRISE ENGINEERING
770 S WASHINGTON ST.
AFTON, WYOMING 83110
TEL 307.885.8500 · FAX 307.885.8501
www.sunrise-eng.com

GR-RS-SC JPWB

CROSSROADS PUMP STATION

MECHANICAL PIPING PLAN VIEW

SEI NO.	DESIGNED	DRAWN	CHECKED	SHEET NO.	
07265	FDK	BJ	JJL	44 of 99	MP1

P:\WWDC GR-RS-SC JPWB Cross Roads Pump Station Level III (S072265)\Dwg C3D\Pump Station\Details\Pump Station Layout.dwg Feb 13, 2026 9:40am bjenkins

EQUIPMENT SCHEDULE

NO.	DESCRIPTION	SIZE	REMARKS
1	REDUCER	30"x24"	FLG x MJ (2 REQ'D) WITH MEGALUG OR APPROVE EQUAL
2	BUTTERFLY VALVE	24"	FLG x FLG (2 REQ'D)
3	INSERTION METER	24" (PIPE)	TORPEE MAG OR APPROVED EQUAL
4	REDUCING TEE	24" x 24" x 16"	FLG X FLG (6 REQ'D)
5	GATE VALVE	12"	FLG X FLG (4 REQ'D)
6	90° BEND	16"	FLG X MJ (4 REQ'D)
7	RESTRAINED FLANGED ADAPTER	24"	(4 REQ'D)
8	BLIND FLANGE (STEEL)	24"	FLG (2 REQ'D)
9	RESTRAINED FLANGED ADAPTER	10"	(9 REQ'D)
10	VERTICAL CAN PUMP	14"	NATIONAL PUMP H14MC OR APPROVED EQUAL (4 REQ'D)
11	PUMP CONTROL VALVE	12"	CLA-VAL 60-BY RISING STEM WITH OPEN AND CLOSE LIMIT SWITCHES OR APPROVED EQUAL (4 REQ'D)
12	REDUCER	18" x 12"	FLG x FLG
13	RESTRAINED FLANGED ADAPTER	18"	
14	REDUCING TEE	18" x 18" x 12"	FLG x FLG x FLG
15	REDUCER	24" x 18"	FLG x FLG x FLG

EQUIPMENT SCHEDULE

NO.	DESCRIPTION	SIZE	REMARKS
16	D. I. P.	24" x 48"	FLG x PE
17	REDUCING TEE	24" x 24" x 8"	FLG x FLG x FLG
18	TEE	24" x 24" x 24"	FLG x FLG
19	90° BEND	24"	FLG x FLG
20	D.I.P. SPOOL	16"x23"	FLG xFLG (4 REQ'D)
21	GATE VALVE	8"	FLG x FLG
22	SURGE ANTICIPATION VALVE	8"	CLA-VAL 52-03 WITH OPEN POSITION ALARM OR APPROVED EQUAL
23	REDUCER	10" x 8"	FLG x MJ
24	D.I.P. SPOOL	12" x 17-7/16"	FLG x FLG (2 REQ'D) W/2" THREADED NIPPLE
24A	D.I.P. SPOOL	12" x 11"	FLG x FLG (2 REQ'D) W/2" THREADED NIPPLE
25	D.I.P. SPOOL	24" x 48"	FLG x PLAIN (4 REQ'D)
26	D.I.P. SPOOL	24" x 72"	FLG x FLG
27	D.I.P. SPOOL	24" x 120"	FLG x PLAIN
28	D.I.P. SPOOL	12" x 24"	FLG x FLG
29	AIR RELEASE VALVE		SEE DETAIL D SHEET D20
30	D.I.P. SPOOL	10" x 12"	FLG x PLAIN (2 REQ'D)
31	D.I.P. SPOOL	18" x 33"	FLG x PLAIN
32	D.I.P. SPOOL	18" x 26"	FLG x PLAIN
33	D.I.P. SPOOL	24' x 11' 2-1/2"	FLG x PLAIN
34	90° BEND	12' x 12"	FLG x FLG
35	REDUCING TEE	24"x24"x12'	FLG x FLG (2 REQ'D)
36	DISMANTLING JOINT W/ RESTRAINT RODS	PER ADJACENT PIPE	SMITH BLAIR MODEL 975, ROMAC 400 OR APPROVED EQUAL 150 PSI WORKING PRESSURE
37	22.5° BEND	10"	FLG x FLG
38	CONE STRAINER	16"	1/2" OPENINGS (4 REQ'D)
39	DUCKBILL VALVE	10"	TIDEFLEX SERIES TF-2 RO APPROVED EQUAL
40	CHLORINE ANALYZER		
41	AIR\VAC	2"	SEE D SHEET D20
42	SAMPLE TAP	1/2'	SEE E SHEET D2
43	D.I.P. SPOOL	10" x 13"	FLG x PLAIN (4 REQ'D)
44	D.I.P. SPOOL	8"x 59"	FLG x PLAIN
45	D.I.P. SPOOL	8"x21"	FLG x FLG
46	TEE	8"	FLG x FLG
47	FLOOD SENSOR SWITCH		
48	FLOOR DRAIN		SEE I SHEET S7
49	BUTTERFLY VALVE	16"	
50	D.I.P. SPOOL	16"x13"	FLG x PE (4 REQ'D)
51	JOINT HARNESS	16"	(4 REQ'D)

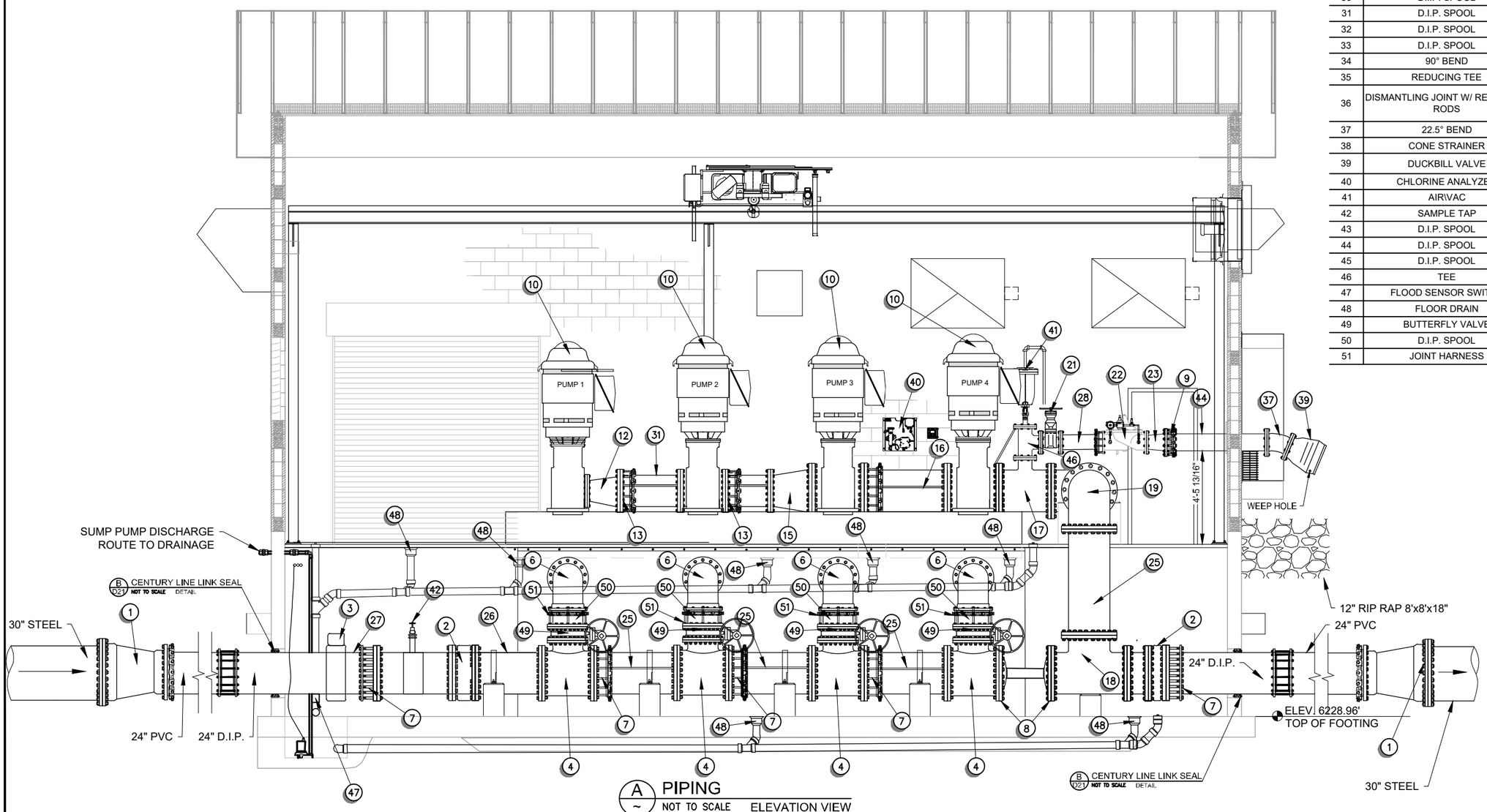

A ~ PIPING
NOT TO SCALE ELEVATION VIEW

REV NO.	COMMENT	DATE

SUNRISE ENGINEERING
770 S WASHINGTON ST.
AFTON, WYOMING 83110
TEL 307.885.8500 · FAX 307.885.8501
www.sunrise-eng.com

GR–RS–SC JPWB

CROSSROADS PUMP STATION

MECHANICAL PIPING ELEVATION

SEI NO.	DESIGNED	DRAWN	CHECKED	SHEET NO.	
07265	FDK	BJ	JJL	45 of 99	MP2

P:\WMDC GR-RS-SC JPWB Cross Roads Pump Station Level III (S07265)\Dwg C3D\Pump Station\Details\Pump Station Layout.dwg Feb 13, 2026 9:40am bjenkins

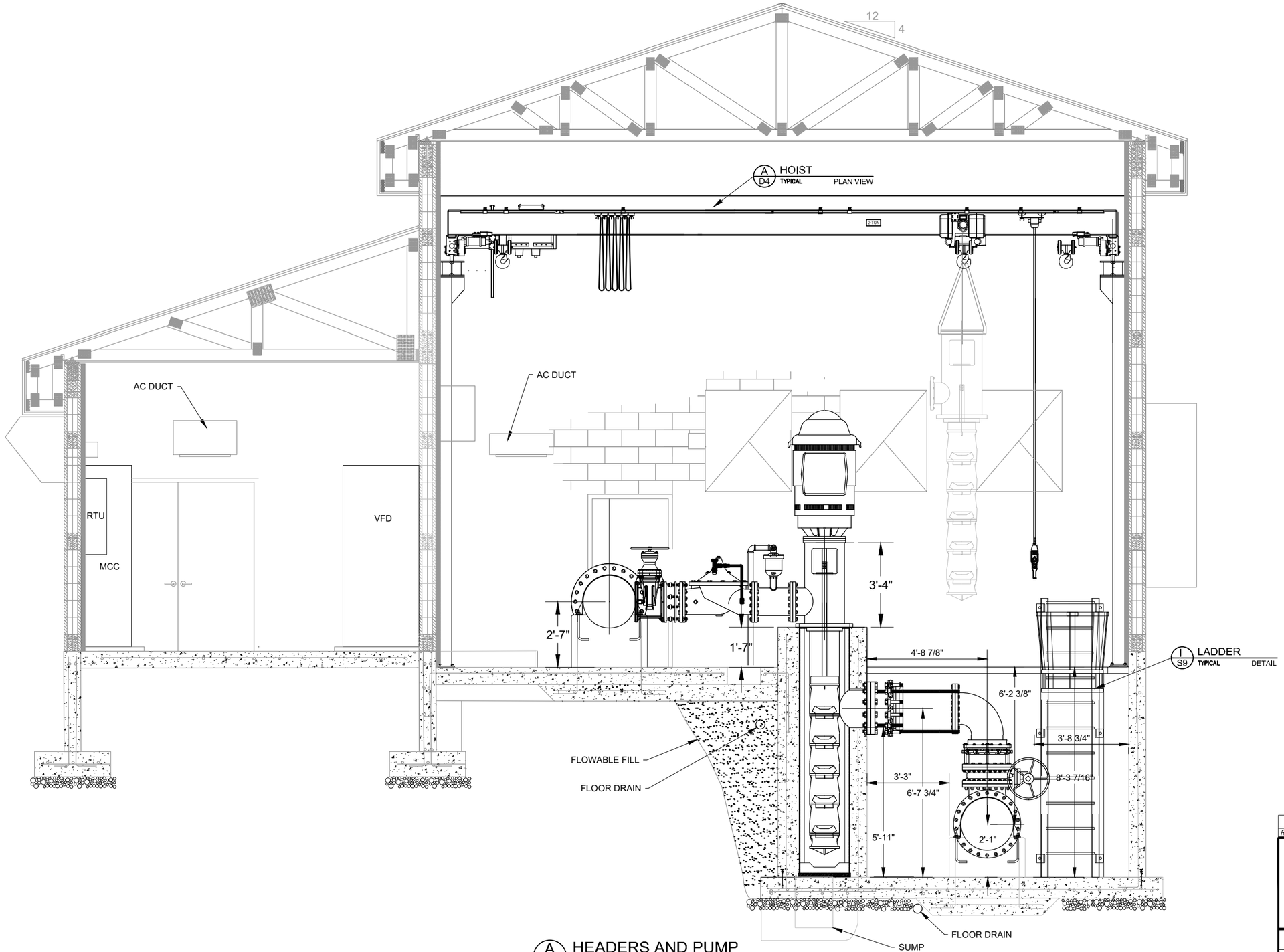

A
~
HEADERS AND PUMP
NOT TO SCALE SECTION VIEW

REV NO.	COMMENT	DATE

SUNRISE ENGINEERING

770 S WASHINGTON ST.
AFTON, WYOMING 83110
TEL 307.885.8500 · FAX 307.885.8501
www.sunrise-eng.com

GR–RS–SC JPWB

CROSSROADS PUMP STATION

MECHANICAL PIPING SECTION

SEI NO.	DESIGNED	DRAWN	CHECKED	SHEET NO.	
07265	FDK	BJ	JJL	46 of 99	MP3

P:\WWDC GR-RS-SC JPWB Cross Roads Pump Station Level III (S07265)\Dwg C3D\Pump Station\Details\Pump Station Layout.dwg Feb 13, 2026 9:40am bjenkins

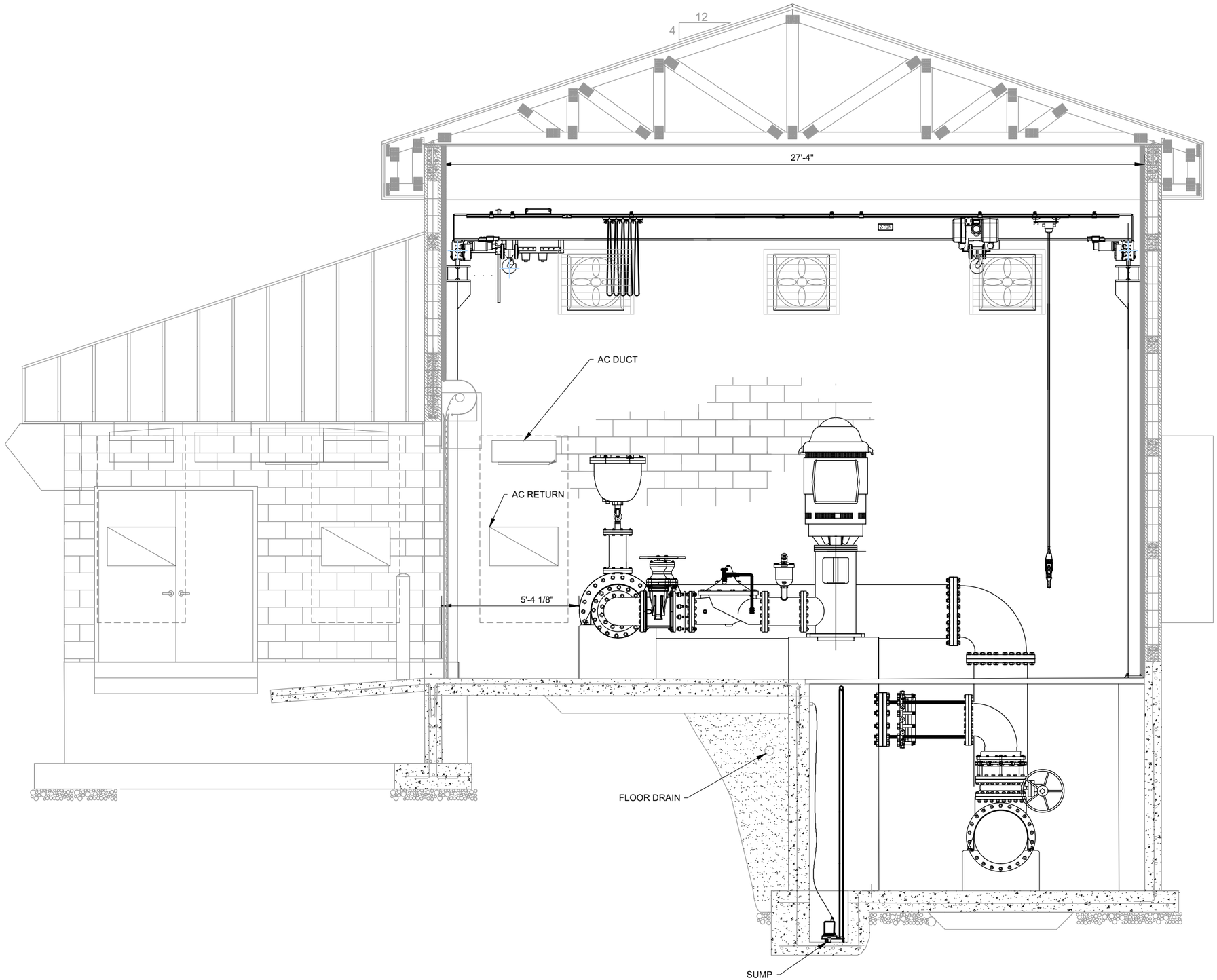

B
~
TRAILER BAY
SECTION VIEW

REV NO.	COMMENT	DATE

SUNRISE ENGINEERING
770 S WASHINGTON ST.
AFTON, WYOMING 83110
TEL 307.885.8500 · FAX 307.885.8501
www.sunrise-eng.com

GR–RS–SC JPWB

CROSSROADS PUMP STATION

MECHANICAL PIPING SECTION

SEI NO.	DESIGNED	DRAWN	CHECKED	SHEET NO.	
07265	FDK	BJ	JJL	47 of 99	MP4

P:\WWDC GR-RS-SC JPWB Cross Roads Pump Station Level III (S072265)\Dwg C3D\Pump Station\Details\Pump Station Layout.dwg Feb 13, 2026 9:40am bjenkins

SYMBOLS AND LINE TYPES FOR PLANS

GROUNDING/LIGHTNING PROTECTION

- GROUND CABLE
- BOLTED CONNECTION
- WELDED CONNECTION
- BI-METALIC CONNECTION
- GROUND ROD
- GROUND TEST WELL
- AIR TERMINAL
- GROUND BUS BAR

EQUIPMENT

- NEW EQUIPMENT
- EXISTING EQUIPMENT
- FUTURE EQUIPMENT
- DEMOLITION EQUIPMENT
- LIGHTING PANEL
- POWER PANEL
- DISCONNECT SWITCH
- FUSED DISCONNECT SWITCH
- COMBINATION DISCONNECT/ MAGNETIC MOTOR STARTER
- REDUCED VOLTAGE COMBINATION DISCONNECT/MAG MOTOR STARTER
- M — MOTOR
- E — MISC. ELECTRICAL LOAD
- J — JUNCTION BOX
- P — PULL BOX

LINES

- NEW CONSTRUCTION
- EXISTING CONSTRUCTION
- CONDUIT EXPOSED
- CONDUIT CONCEALED IN WALL, CEILING OR HIDDEN FROM VIEW
- CONDUIT CONCEALED IN FLOOR
- HOMERUN TO PANEL
- FLEXIBLE CONDUIT
- FO — FIBER-OPTIC CABLE
- UNDERGROUND ELECTRICAL ON BUILDING PLANS
- UGE — UNDERGROUND ELECTRICAL ON SITE PLANS
- OHE — OVERHEAD ELECTRICAL
- CONDUIT TURNING UP
- CONDUIT TURNING DOWN
- CONDUIT TERMINATED AND CAPPED
- CONDUIT WITH BUSHING
- CONDUIT PASSING THRU ELEVATION

LIGHTING

- RECTANGULAR LUMINAIRE
- RECTANGULAR LUMINAIRE WITH EMERGENCY BACK-UP
- CIRCULAR LUMINAIRE
- CIRCULAR LUMINAIRE WITH EMERGENCY BACK-UP
- EMERGENCY WALL PACK UNIT
- CEILING MOUNTED EXIT SIGN
- WALL MOUNTED EXIT SIGN
- POLE-MOUNTED AREA LIGHT
- S — SINGLE POLE SWITCH
- S_3 — THREE-WAY SWITCH
- S_4 — FOUR-WAY SWITCH
- S_{WP} — WEATHERPROOF SWITCH
- S_D — DIMMER SWITCH
- S_{EXP} — EXPLOSIONPROOF SWITCH
- OS — CEILING MOUNTED OCCUPANCY SENSOR
- OS — WALL MOUNTED OCCUPANCY SENSOR
- PC — CEILING/ROOF MOUNTED PHOTOCELL
- PC — WALL MOUNTED PHOTOCELL

RECEPTACLES

- 208/240V RECEPTACLE
- 480V RECEPTACLE
- SURFACE, SIMPLEX RECEPTACLE
- SURFACE, SIMPLEX, GFI RECEPTACLE
- FLUSH, SIMPLEX RECEPTACLE
- FLUSH, SIMPLEX, GFI RECEPTACLE
- SURFACE, DUPLEX RECEPTACLE
- SURFACE, DUPLEX, GFI RECEPTACLE
- FLUSH, DUPLEX RECEPTACLE
- FLUSH, DUPLEX, GFI RECEPTACLE
- SURFACE, QUADPLEX RECEPTACLE
- SURFACE, QUADPLEX, GFI RECEPTACLE
- FLUSH, QUADPLEX RECEPTACLE
- FLUSH, QUADPLEX, GFI RECEPTACLE

DATA JACKS

- RECESSED DATA JACK
- RECESSED TELEPHONE / DATA JACK
- RECESSED TELEPHONE JACK
- SURFACE DATA JACK
- SURFACE TELEPHONE / DATA JACK
- SURFACE TELEPHONE JACK

INSTRUMENTS

- ACTUATED VALVE
- CONTROL STATION
- INSTRUMENT
- H — HORN
- X — STROBE LIGHT, COLOR AS INDICATED
- H — STROBE LIGHT AND HORN COMBINATION

ABBREVIATIONS	DESCRIPTION
(E)	EXISTING
(F) / FU	FUTURE
A	AMPERES
AFF	ABOVE FINISHED FLOOR
AFG	ABOVE FINISHED GRADE
AIC	AMPS INTERRUPTING CURRENT
ATS	AUTOMATIC TRANSFER SWITCH
AWG	AMERICAN WIRE GAUGE
BC	BARE COPPER WIRE
BF	BELOW FLOOR
BG	BELOW GRADE
BKR	BREAKER
BWPS	BACKWASH PUMP STATION/CLEAR WELL
C	CONDUIT
CHL	CHLORINE
COND	CONDUCTIVITY
CP	CONTROL PANEL
CPT	CONTROL POWER TRANSFORMER
CTRL	CONTROL
EL	ELEVATION
EO	ELECTRICALLY OPERATED
EOT	END OF TRAVEL
ES	ETHERNET SWITCH, MANAGED
EX	EXPOSED
EXP	EXPLOSION-PROOF (CLASS1, DIV1, GROUP D)
EXT	EXTERIOR
FACP	FIRE ALARM CONTROL PANEL
GND	GROUND
GRC	GALVANIZED RIGID CONDUIT
GRC-C	GALVANIZED RIGID CONDUIT - COATED
HH	HANDHOLES
HME	HOME
INDUST	INSUSTRIAL
IO	INPUT/OUTPUT
LC	LIGHTING CONTACTOR
LFMC	LIQUIDTITE FLEXIBLE METAL CONDUIT
LGHT	LIGHT/ LIGHTING
LR	LINE REACTOR
MCC	MOTOR CONTROL CENTER
MUN	MUNICIPAL
N.C.	NORMALLY CLOSED
N.O.	NORMALLY OPEN
NIC	NETWORK INTERFACE CARD
OIT	OPERATOR INTERFACE TERMINAL
OM3	MULTI-MODE FIBER OM3 GRADE
P	POLE
PCS	PVC COATED STEEL
PLC	PROGAMMABLE LOGIC CONTROLLER
PP	POWER PANEL
PWR	POWER
REC	RECEPTACLE
RGS	RIGID GALVANIZED STEEL
RIO	REMOTE I/O
RW	RAW WATER
SP	SPARE
SPD	SURGE PROTECTIVE DEVICE
SW	SWITCH
T	CAT-6 CABLE
TYP.	TYPICAL
UE	UNDERGROUND ELECTRICAL
UPS	UNINTERRUPTIBLE POWER SUPPLY
VFD	VARIABLE FREQUENCY DRIVE
VLT	VAULT
WAP	WIRELESS ACCESS POINT
WP	WEATHERPROOF
XFMR	TRANSFORMER

GENERAL NOTES:

1. ALL HVAC EQUIPMENT (LOUVERS, EXHAUST FANS, AIR HANDLERS, ETC) ARE SUPPLIED BY OTHERS AND ARE SHOWN FOR REFERENCE.
2. THIS IS A STANDARD ELECTRICAL LEGEND AND NOT ALL DEVICE DESIGNATIONS ARE USED ON THIS PROJECT.
3. ALL RECEPTACLES WITHIN PROCESS SPACES, UNIFINISHED AREAS, OUTDOORS, OR AS SHOWN, TO BE GFCI.
4. REFER TO 00E-003 FOR AREA CLASSIFICATIONS AND MATERIAL DESIGNATIONS.
5. FOR 120VAC RECEPTACLE CIRCUITS:

LENGTH	WIRE SIZE
75'-124'	#10 AWG
125'-179'	#8 AWG
180'-299'	#6 AWG
300'-<	#4 AWG

TAG DESIGNATION SCHEMES FOR PLANS

LUMINAIRE TAG SCHEME

LXX	LUMINAIRE TYPE
XXX-PNL-XXX-XX	CIRCUIT
SXXX	SWITCHING DEVICE(S)
XX'-XX" AFF	ELEVATION TO BOTTOM OF FIXTURE

RECEPTACLE TAG SCHEME

XXX-PNL-XXX	POWER SOURCE TAG
XX	CIRCUIT NUMBER
XXX	MODIFIER (IF APPLICABLE)

CABLE TRAY TAG SCHEME

XXX-CT-XXX	CABLE TRAY TAG
XX" x XX"	HEIGHT x WIDTH
XX'-XX" AFF	ELEVATION TO BOTTOM OF TRAY

no.	date	by	ckd	description
0	02/12/26	AMM	MAH	ISSUED FOR BID

PROFESSIONAL ENGINEER
MARK A. HOPKINS
19652
DATE: 02/12/2026
WYOMING

BURNS McDONNELL
9191 S. JAMAICA STREET
ENGLEWOOD, CO 80112
Burns & McDonnell Engineering Co, Inc

Issue date: FEBUARY 2026	detailed by: A. BENSON
designed by: A. MORRONI	checked by: M. HOPKINS

SUNRISE ENGINEERING

CROSSROADS PUMP STATION
ELECTRICAL
ELECTRICAL GENERAL NOTES, SYMBOLS, AND ABBREVIATIONS I

project: 124784	contract:
drawing: 00E-001	rev.: 0

sheet 48 of 99 sheets

Scale For Microfilming: Millimeters / Inches

2/12/2026 1:33:18 PM

Autodesk Docs://124784_Crossroads/124784_CROSSROADS_MEP_R24.rvt

SYMBOLS AND LINE TYPES FOR ONE-LINES AND CONTROL DIAGRAMS

TRANSFORMERS

	POWER TRANSFORMER (XFMR)
(2)	POTENTIAL TRANSFORMER (SHOWN WITH QUANTITY)
200:5 (2)	CURRENT TRANSFORMER, SINGLE RATIO (SHOWN WITH QUANTITY)
	CONTROL POWER TRANSFORMER (ONE-LINE DIAGRAMS)
	CONTROL POWER TRANSFORMER (CONTROL SCHEMATIC DIAGRAMS)

PROTECTION/DISCONNECTS

XX XX	PROTECTION DEVICE (ANSI C37.2 DEVICE NUMBER AS INDICATED)
	CIRCUIT BREAKER
	FUSE
	FUSED DISCONNECT SWITCH
	DISCONNECT SWITCH
	POLE MOUNTED FUSED DISCONNECT SWITCH
	PLUG-IN OR DRAWOUT CONNECTION
	CAPACITOR
	THERMAL OVERLOADS
O.L. (3)	THERMAL OVERLOAD RELAY (SHOWN WITH QUANTITY)

MOTOR CONTROLLERS FOR ONE-LINE DIAGRAMS

LABELS USED ON ONE-LINE DIAGRAMS REFER TO SCHEMATIC SHEETS USING LABELS AS USED BELOW:

- MNR## - SINGLE SPEED NON-REVERSING MANUAL MOTOR STARTER
- FVNR## - SINGLE SPEED NON-REVERSING MAGNETIC MOTOR START
- FVR## - SINGLE SPEED REVERSING MAGNETIC MOTOR STARTER
- 2FVNR## - TWO SPEED NON-REVERSING MAGNETIC MOTOR STARTER
- RVSS## - REDUCED-VOLTAGE SOLID-STATE
- VFD## - VARIABLE FREQUENCY DRIVE

FULL VOLTAGE MOTOR CONTROLLERS
(SYMBOLS ROTATED 90° FROM ACTUALL USAGE)

MNR## FVNR## FVR## 2FVNR##

SOLID-STATE MOTOR CONTROLLERS

RVSS## — RVSS — SOFTSTART MOTOR CONTROLLER

VFD## — CONTROLLER SCHEMATIC NUMBER

INPUT FILTER — INPUT FILTER (IF USED)

VFD CT/VT — VFD (VARIABLE FREQUENCY DRIVE); CT = CONSTANT TORQUE, VT = VARIABLE TORQUE

OUTPUT FILTER — OUTPUT FILTER (IF USED)

INPUT & OUTPUT VFD FILTERS:

- AFE - ACTIVE FRONT END
- #% L.R. - LINE/LOAD REACTOR, DEPENDS ON LOCATION SHOWN
- DV/DT - DV/DT FILTER
- SINE - SINE WAVE/SINUS FILTER

LOADS/SOURCES

	GENERATOR
##	ELECTRIC MOTOR - APPROX. HORSEPOWER AS INDICATED
	EQUIPMENT AS NOTED ON DIAGRAM

PROTECTION/DISCONNECTS

ARMS	ARC FLASH REDUCTION MAINTENANCE SWITCH
TU	ELECTRONIC TRIP UNIT
LSIG	LONG TIME, SHORT TIME, INSTANTANEOUS, AND GROUND TRIP SETTINGS

MISC ONE-LINE SYMBOLS

(X)	"X" INDICATES NUMBER OF DEVICES WHEN MORE THAN ONE
	DELTA WINDING CONNECTION
	GROUNDING WYE WINDING CONNECTION
	MEDIUM VOLTAGE CABLE TERMINATION
	GROUNDING CONNECTION
	LIGHTNING ARRESTOR

METERING/NETWORKING

A	AMMETER
V	VOLTMETER
PQM	POWER QUALITY METER
NSW	NETWORK SWITCH
PSU	POWER SUPPLY UNIT

CONTROL DEVICES

A B	(A) LEVEL SWITCH - CLOSES WITH RISING LEVEL (B) LEVEL SWITCH - OPENS WITH RISING LEVEL
A B	(A) FLOW SWITCH - CLOSES WITH INCREASING FLOW (B) FLOW SWITCH - OPENS WITH INCREASING FLOW
A B	(A) MAINTAINED PUSH-BUTTON - N.O. (B) MAINTAINED PUSH-BUTTON - N.C.
A B	(A) LIMIT SWITCH - N.C. (B) LIMIT SWITCH - N.C. HELD OPEN
A B	(A) LIMIT SWITCH - N.O. (B) LIMIT SWITCH - N.O. HELD CLOSED
A B	(A) PRESSURE SWITCH - CLOSES WITH INCREASING PRESSURE (B) PRESSURE SWITCH - OPENS WITH INCREASING PRESSURE
A B	(A) MOMENTARY PUSH-BUTTON - N.O. (B) MOMENTARY PUSH-BUTTON - N.C.
A B	(A) TEMP. SWITCH - CLOSES WITH RISING TEMP. (B) TEMP. SWITCH - OPENS WITH RISING TEMP.
A B	(A) N.O. TIME DELAY CONTACT (B) N.C. TIME DELAY CONTACT
X X XO	TWO POSITION SELECTOR SWITCH
X X X XOO	THREE POSITION SELECTOR SWITCH
X X X X XOOO	FOUR POSITION SELECTOR SWITCH
	SOLENOID VALVE
	PHOTOCELL
X	INDICATING LIGHT, COLOR AS INDICATED
X	PUSH-TO-TEST INDICATING LIGHT, COLOR AS INDICATED

SYMBOLS AND LINE TYPES FOR NETWORK ARCHITECTURE DIAGRAMS

SWITCHGEAR	
SWITCHBOARD	
ETHERNET RADIO	
YAGI ANTENNA	
OMNI ANTENNA	
RADIO TOWER	
OPERATOR LAPTOP	
OPERATOR WORKSTATION	
GENERATOR	
NETWORK FIREWALL	

	PLC
	NETWORK SWITCH
	NETWORK SWITCH (WITH SFP PORTS)
	SERVER RACK
FOPP	FIBER OPTIC PATCH PANEL
	OIT
	UPS

TAGGING DESIGNATION SCHEMES AND LINE TYPES FOR ONE-LINES AND DIAGRAMS

INSTRUMENT TAG SCHEME

EQUIPMENT/INSTRUMENT IDENTIFIER — XXX-XXX

FACILITY AREA OR SYSTEM

LOOP NUMBER — XXX

NOTES

1. INSTRUMENT ELEVATION ASSOCIATED CONTROL PANEL

WIRE TAG SCHEME

WIRE TYPE — (W)##

WIRE NUMBER — (W)##

(W)## (W)##

NOTES

1. OPTIONAL CONFIGURATIONS SHOWN.

LINE TYPES AND TERMINALS

	POWER CIRCUIT AND EQUIPMENT INSTALLED BY THIS CONTRACT
	EXISTING CIRCUIT AND EQUIPMENT
	FUTURE POWER CIRCUIT AND EQUIPMENT
	EQUIPMENT ENCLOSURE
	REMOTE WIRING
	CAT 6 / ETHERNET
	ENCLOSURE
	FUTURE
	BUILDING OUTLINE
	SKID / VENDOR PROVIDED ENCLOSURE
+ (A) - (B)	(A) POSITIVE TERMINAL (B) NEGATIVE TERMINAL
A B	(A) CONDUCTOR CONNECTION (B) NO CONNECTION
SM	FIBER OPTIC CABLE - SINGLE MODE
MM	FIBER OPTIC CABLE - MULTI-MODE

no.	date	by	ckd	description
0	02/12/26	AMM	MAH	ISSUED FOR BID

PROFESSIONAL ENGINEER MARK A. HOPKINS 19652 DATE 02/12/2026 WYOMING

BURNS McDONNELL
9191 S. JAMAICA STREET
ENGLEWOOD, CO 80112
Burns & McDonnell Engineering Co, Inc

Issue date: FEBUARY 2026	detailed by: A. BENSON
designed by: A. MORRONI	checked by: M. HOPKINS

SUNRISE ENGINEERING

CROSSROADS PUMP STATION
ELECTRICAL
ELECTRICAL GENERAL NOTES, SYMBOLS, AND ABBREVIATIONS II

project: 124784	contract:
drawing: 00E-002	rev.: 0

sheet 49 of 99 sheets

AREA CLASSIFICATION AND MATERIAL DESIGNATIONS

LOCATION	AREA CLASSIFICATION	CONDUIT AND FITTING	FLEXIBLE TYPE	ENCLOSURE NEMA RATING	RACEWAY SUPPORTS	HARDWARE	NOTE
PUMP STATION PUMP ROOM	UNCLASSIFIED, WET	RGS	LFMC	NEMA 4X, SS	STAINLESS STEEL	STAINLESS STEEL	
INDOOR NON-PROCESS AREA	UNCLASSIFIED	RGS	FMC	NEMA 4X, SS	STAINLESS STEEL	STAINLESS STEEL	
OUTDOORS, NON-PROCESS AREA	UNCLASSIFIED, WET	RGS	LFMC	NEMA 4X, SS	STAINLESS STEEL	STAINLESS STEEL	
UNDERGROUND	UNCLASSIFIED, WET	PVC-ENCASED	LFMC	N/A	STAINLESS STEEL	STAINLESS STEEL	
ELECTRICAL ROOMS	UNCLASSIFIED, DRY	RGS	FMC	NEMA 1	GALVANIZED	GALVANIZED	

ANALOG CABLE / CONDUIT SIZES

CONDUIT DESCRIPTOR	WIRE/CONDUIT
A1	1-#16/2 TSP, 3/4"C
A2	2-#16/2 TSP, #18 GND, 3/4"C
A3	3-#16/2 TSP, #18 GND, 3/4"C
A4	4-#16/2 TSP, #18 GND, 1"C
A5	5-#16/2 TSP, #18 GND, 1"C
A6	6-#16/2 TSP, #18 GND, 1-1/4"C
A7	7-#16/2 TSP, #18 GND, 1-1/4"C
A8	8-#16/2 TSP, #18 GND, 1-1/4"C
A9	9-#16/2 TSP, #18 GND, 1-1/4"C
A10	10-#16/2 TSP, #18 GND, 1-1/4"C
A11	11-#16/2 TSP, #18 GND, 1-1/2"C
A12	12-#16/2 TSP, #18 GND, 1-1/2"C
A13	13-#16/2 TSP, #18 GND, 1-1/2"C
A14	14-#16/2 TSP, #18 GND, 2"C
A15	15-#16/2 TSP, #18 GND, 2"C
A16	16-#16/2 TSP, #18 GND, 2"C
A17	17-#16/2 TSP, #18 GND, 2"C
A18	18-#16/2 TSP, #18 GND, 2"C
A19	19-#16/2 TSP, #18 GND, 2"C
A20	20-#16/2 TSP, #18 GND, 2"C
A21	21-#16/2 TSP, #18 GND, 2"C
A22	22-#16/2 TSP, #18 GND, 2"C
A23	23-#16/2 TSP, #18 GND, 2-1/2"C
A24	24-#16/2 TSP, #18 GND, 2-1/2"C
A25	25-#16/2 TSP, #18 GND, 2-1/2"C

DISCRETE CABLE / CONDUIT SIZES

CONDUIT DESCRIPTOR	WIRE/CONDUIT
C1	NOT USED
C2	2-#14, 3/4"C
C3	3-#14, 3/4"C
C4	4-#14, 3/4"C
C5	5-#14, 3/4"C
C6	6-#14, 3/4"C
C7	7-#14, 3/4"C
C8	8-#14, 3/4"C
C9	9-#14, 3/4"C
C10	10-#14, 3/4"C
C11	11-#14, 3/4"C
C12	12-#14, 1"C
C13	13-#14, 1"C
C14	14-#14, 1"C
C15	15-#14, 1"C
C16	16-#14, 1"C
C17	17-#14, 1"C
C18	18-#14, 1"C
C19	19-#14, 1"C
C20	20-#14, 1-1/4"C
C21	21-#14, 1-1/4"C
C22	22-#14, 1-1/4"C
C23	23-#14, 1-1/4"C
C24	24-#14, 1-1/4"C
C25	25-#14, 1-1/4"C

MULTI-CONDUCTOR DISCRETE CABLE / CONDUIT SIZES

CONDUIT DESCRIPTOR	WIRE/CONDUIT
M2	1-(2-#14), 3/4"C
M3	1-(3-#14), 3/4"C
M4	1-(4-#14), 3/4"C
M5	1-(5-#14), 3/4"C
M6	1-(6-#14), 3/4"C
M7	1-(7-#14), 3/4"C
M8	1-(8-#14), 3/4"C
M9	1-(9-#14), 1"C
M10	1-(10-#14), 1"C
M11	1-(11-#14), 1"C
M12	1-(12-#14), 1"C
M13	1-(13-#14), 1"C
M14	1-(14-#14), 1"C
M15	1-(15-#14), 1-1/4"C
M16	1-(16-#14), 1-1/4"C
M17	1-(17-#14), 1-1/4"C
M18	1-(18-#14), 1-1/4"C
M19	1-(19-#14), 1-1/4"C
M20	1-(20-#14), 1-1/4"C

NETWORK CABLE / CONDUIT DESIGNATION

CONDUIT DESCRIPTOR	WIRE/CONDUIT
N1	1 - CAT 6 NETWORK, 3/4"C
N2	2 - CAT 6 NETWORK, 3/4"C
N3	3 - CAT 6 NETWORK, 1"C
N4	4 - CAT 6 NETWORK, 1"C
N5	1 - 6 STR MM FIBER, 1"C
N6	1 - 12 STR MM FIBER, 1"C
N7	1 - 24 STR MM FIBER, 1"C
N8	1 - 6 STR SM FIBER, 1"C
N9	1 - 12 STR SM FIBER, 1"C
N10	1 - 24 STR SM FIBER, 1"C

MOTOR WINDING RTDs

CONDUIT DESCRIPTOR	WIRE/CONDUIT
R1	1-(#16/3 TSP), 3/4"C
R2	2-(#16/3 TSP), 3/4"C
R3	3-(#16/3 TSP), 3/4"C
R4	4-(#16/3 TSP), 1"C
R5	5-(#16/3 TSP), 1"C
R6	6-(#16/3 TSP), 1-1/4"C
R8	8-(#16/3 TSP), 1-1/4"C

POWER CABLE / CONDUIT SIZES

CONDUIT DESCRIPTOR	WIRE/CONDUIT	CONDUIT DESCRIPTOR	WIRE/CONDUIT
P1*	2-#12, #12 GND, 3/4"C	P21	2 SETS - 3-300KCMIL, #1/0 GND, 2-1/2"C
P2*	3-#12, #12 GND, 3/4"C	P21N	2 SETS - 4-300KCMIL, #1/0 GND, 3"C
P3*	2-#10, #12 GND, 3/4"C	P22	3-350KCMIL, #2 GND, 2-1/2"C
P4*	3-#10, #12 GND, 3/4"C	P22N	4-350KCMIL, #2 GND, 3"C
P5*	2-#8, #10 GND, 3/4"C	P23	2 SETS - 3-350KCMIL, #1/0 GND, 2-1/2"C
P6*	3-#8, #10 GND, 1"C	P23N	2 SETS - 4-350KCMIL, #1/0 GND, 3"C
P7*	2-#6, #8 GND, 3/4"C	P24	3-500KCMIL, #2 GND, 4"C
P8*	3-#6, #8 GND, 1"C	P24N	4-500KCMIL, #2 GND, 4"C
P9*	2-#4, #8 GND, 3/4"C	P25	2 SETS - 3-500KCMIL, #1/0 GND, 4"C
P10*	3-#4, #8 GND, 1-1/4"C	P25N	2 SETS - 4-500KCMIL, #1/0 GND, 4"C
P11*	2-#2, #6 GND, 1"C	P26	3 SETS - 3-500KCMIL, #2/0 GND, 4"C
P12*	3-#2, #6 GND, 1-1/4"C	P26N	3 SETS - 4-500KCMIL, #2/0 GND, 4"C
P13*	2-#1/0, #6 GND, 1-1/4"C	P27	4 SETS - 3-500KCMIL, #4/0 GND, 4"C
P14*	3-#1/0, #6 GND, 1-1/2"C	P27N	4 SETS - 4-500KCMIL, #4/0 GND, 4"C
P15*	3-#2/0, #6 GND, 2"C	P28	5 SETS - 3-500KCMIL, 250KCMIL GND, 4"C
P16*	3-#3/0, #6 GND, 2"C	P28N	5 SETS - 4-500KCMIL, 250KCMIL GND, 4"C
P17*	3-#4/0, #4 GND, 2"C	P29	6 SETS - 3-500KCMIL, 350KCMIL GND, 4"C
P18	3-250KCMIL, #4 GND, 2"C	P29N	6 SETS - 4-500KCMIL, 350KCMIL GND, 4"C
P18N	4-250KCMIL, #4 GND, 2"C	P30	7 SETS - 3-500KCMIL, 500KCMIL GND, 4"C
P19	2 SETS - 3-250KCMIL, #4 GND, 2"C	P30N	7 SETS - 4-500KCMIL, 500KCMIL GND, 4"C
P19N	2 SETS - 4-250KCMIL, #4 GND, 2-1/2"C	P31	8 SETS - 3-500KCMIL, 500KCMIL GND, 4"C
P20	3-300KCMIL, #4 GND, 2-1/2"C	P31N	8 SETS - 4-500KCMIL, 500KCMIL GND, 4"C
P20N	4-300KCMIL, #4 GND, 2-1/2"C	P32	6 SETS - 3-600KCMIL, 250KCMIL GND, 4"C
		P32N	6 SETS - 4-600KCMIL, 250KCMIL GND, 4"C

NOTE: WHERE "N" IS USED ON THE DRAWINGS APPENDED TO THE DESCRIPTORS SHOWN ABOVE AN ADDITIONAL CONDUCTOR EQUAL TO THE PHASE CONDUCTORS IS TO BE PROVIDED.

VFD CABLE / CONDUIT SIZES

CONDUIT DESCRIPTOR	WIRE/CONDUIT	BELDEN #, OR EQUAL
V1	#12 VFD CABLE, 1"C	29502
V2	#10 VFD CABLE, 1-1/4"C	29503
V3	#8 VFD CABLE, 1-1/4"C	29504
V4	#6 VFD CABLE, 1-1/2"C	29505
V5	#4 VFD CABLE, 2"C	29506
V6	#2 VFD CABLE, 2"C	29507
V7	#1 VFD CABLE, 2"C	29528
V8	#1/0 VFD CABLE, 2"C	29529
V9	#2/0 VFD CABLE, 2-1/2"C	29530
V10	#3/0 VFD CABLE, 2-1/2"C	29531
V11	#4/0 VFD CABLE, 3"C	29532
V12	250KCMIL VFD CABLE, 3"C	29533
V13	350KCMIL VFD CABLE, 4"C	29534
V14	500KCMIL VFD CABLE, 4"C	29535

NOTE: VFD CABLE DIAMETERS ARE BASED ON BELDEN CABLE NUMBERS LISTED ABOVE. CONTRACTOR TO INCREASE CONDUIT SIZE IF SUPPLIED CABLE IS OF LARGER DIAMETER.

no.	date	by	ckd	description
0	02/12/26	AMM	MAH	ISSUED FOR BID

PROFESSIONAL ENGINEER MARK A HOPKINS 19652 DATE: 02/12/2026 WYOMING

BURNS McDONNELL
9191 S. JAMAICA STREET
ENGLEWOOD, CO 80112
Burns & McDonnell Engineering Co, Inc

Issue date	detailed by
FEBUARY 2026	A.BENSON
designed by	**checked by**
A. MORRONI	M. HOPKINS

SUNRISE ENGINEERING

CROSSROADS PUMP STATION
ELECTRICAL
AREA CLASSIFICATIONS, MATERIALS, AND CONDUIT SCHEDULES

project	contract
124784	

drawing **00E-003** — rev. **0**

sheet **50** of 99 sheets

Scale For Microfilming: Millimeters / Inches

2/12/2026 1:33:21 PM

Autodesk Docs://124784_Crossroads/124784_CROSSROADS_MEP_R24.rvt

LUMINAIRE SCHEDULE

LUMINAIRE TYPE	ACCEPTABLE MANUFACTURER	CATALOG NUMBER	CONSTRUCTION	TYPE OF FIXTURE	OPTICS	LAMP	DRIVER	ACCESSORIES/NOTES
A	HOLOPHANE OR APPROVED EQUAL	HZL1D L48 7000LM FST MVOLT 40K 80CRI MB	COLD ROLLED STEEL CONSTRUCTION WITH IRON PHOSPHATE PRETREATMENT AND HIGH-GLOSS WHITE BAKED ENAMEL FINISH WITH STANDARD DIFFUSE OPTICS	4' LINEAR	INDIRECT DIFFUSED ACRYLIC	LED, 7000 LUMENS 80 CRI, 4000K CCT	120-277V NON-DIMMING TYPE	1. TOTAL WATTAGE PER FIXTURE: 59 WATTS 2. SELF-CONTAINED EMERGENCY LED POWER PACK. (MIN. 10W BATTERY). E10WLCP
B	HOLOPHANE OR APPROVED EQUAL	HZL1D L48 5000LM FST MVOLT 40K 80CRI MB	COLD ROLLED STEEL CONSTRUCTION WITH IRON PHOSPHATE PRETREATMENT AND HIGH-GLOSS WHITE BAKED ENAMEL FINISH WITH STANDARD DIFFUSE OPTICS	4' LINEAR	INDIRECT DIFFUSED ACRYLIC	LED, 5000 LUMENS 80 CRI, 4000K	120-277V NON-DIMMING TYPE	1. TOTAL WATTAGE PER FIXTURE: 41 WATTS 2. SELF-CONTAINED EMERGENCY LED POWER PACK. (MIN. 10W BATTERY). E10WLCP
C	HOLOPHANE OR APPROVED EQUAL	WCNG P4 40K T3M MVOLT ZT 10KV BKSDP SCRW NPR ELSW	DIE-CAST ALUMINIUM FULLY GASKETED, WITH ZINC-INFUSED TGIC THERMOSET POWDER COAT FINISH	WALLPACK	GLASS REFRACTOR	LED, 8500 LUMENS 80 CRI, 4000K CCT	120-277V NON-DIMMING TYPE	1. TOTAL WATTAGE PER FIXTURE: 72 WATTS 2. SELF-CONTAINED EMERGENCY LED POWER PACK. (MIN. 10W BATTERY).
D	HOLOPHANE OR APPROVED EQUAL	WCNG P2 40K T3M MVOLT ZT 10KV BKSDP SCRW NPR ELSW	DIE-CAST ALUMINIUM FULLY GASKETED, WITH ZINC-INFUSED TGIC THERMOSET POWDER COAT FINISH	WALLPACK	GLASS REFRACTOR	LED, 4100 LUMENS 80 CRI, 4000K CCT	120-277V NON-DIMMING TYPE	1. TOTAL WATTAGE PER FIXTURE: 35 WATTS 2. SELF-CONTAINED EMERGENCY LED POWER PACK. (MIN. 10W BATTERY).
E	HOLOPHANE OR APPROVED EQUAL	HLWPC2 P20 40K AS T2M BKSDP 80CRI PE EM	HEAVY GRADE A360 CAST ALUMINIUM HOUSING WITH ZINC-INFUSED TGIC THERMOSET POWDER COAT FINISH	1' CUTOFF WALLPACK	FROSTED ACRYLIC	LED, 5600 LUMENS 80 CRI, 4000K CCT	120-277V NON-DIMMING TYPE	1. TOTAL WATTAGE PER FIXTURE: 47 WATTS 2. SELF-CONTAINED EMERGENCY LED POWER PACK. (MIN. 10W BATTERY) WHERE REQUIRED ON PLANS. 3. PROVIDE BUTTON STYLE PHOTOCONTROL FOR UNSWITCHED LIGHTS.
F	HOLOPHANE OR APPROVED EQUAL	DLTL W 1 R	WHITE, COMPACT, CONTEMPORARY DESIGN. ENGINEERING-GRADE THERMOPLASTIC HOUSEING IS IMPACT-RESISTANT, SCRATCH RESISTANT, AND CORROSION PROOF	EXIT LIGHT	PLASTIC	LED	120V NON-DIMMING TYPE	1. TOTAL WATTAGE PER FIXTURE: 5 WATTS 2. 24/7 OPERATION
G	ACUITY / HOLOPHANE OR ENGINEER APPROVED EQUAL	MGLED-P1-40K-MVOLT-FT-LT-SPA-DDB SD-NL-US	DIE-CAST ALUMINUM HOUSING, STAINLESS STEEL HARDWARE, 3G VIBRATION RATED, EPOXY PAINT BASECOAT, POLYESTER PAINT TOPCOAT	POLE	BOROSILICATE GLASS	LED, 35000 LUMEN, 4000K, 70 CRI	120V-277V NON-DIMMING TYPE	1. TOTAL WATTAGE PER LUMINAIRE: 246 WATTS
G-POLE	ACUITY / HOLOPHANE OR ENGINEER APPROVED EQUAL	SSA2566G-DDB-BAA	25'0" TALL, 6.0" X 0.188" STRAIGHT SQUARE ALLUMINUM POLE, 1.00" X 36" ANCHOR BOLTS @ 12.5" BOLT CIRCLE, MIN EFFECTIVE PROJECTED AREA AT 30" OFFSET 3.8 S.F. @ 110 MPH	POLE	N/A	N/A	N/A	1. PROVIDE MANUFACTURER SUPPLIED ANCHOR BOLTS.

no.	date	by	ckd	description
0	02/12/26	AMM	MAH	ISSUED FOR BID

PROFESSIONAL ENGINEER
MARK A. HOPKINS
19652
DATE: 02/12/2026
WYOMING

BURNS McDONNELL
9191 S. JAMAICA STREET
ENGLEWOOD, CO 80112
Burns & McDonnell Engineering Co, Inc

Issue date FEBUARY 2026	**detailed by** A.BENSON
designed by A. MORRONI	**checked by** M. HOPKINS

SUNRISE ENGINEERING

CROSSROADS PUMP STATION
ELECTRICAL
LUMINAIRE SCHEDULE

project 124784	**contract**

drawing 00E-010 — **rev.** 0

sheet 51 **of** 99 **sheets**

Scale For Microfilming
Millimeters
Inches

2/12/2026 1:33:21 PM

Autodesk Docs://124784_Crossroads/124784_CROSSROADS_MEP_R24.rvt

ELECTRICAL EQUIPMENT	VOLTAGE (Y/V)	PHASE	WIRE	MAIN BUS (A)	MAIN BREAKER	MOUNTING	LOCATION	NEMA RATING	SHORT CIRCUIT (KAIC)	FED VIA
SWBD-100	480	3	3	2000	2000	PAD MOUNT	INDOORS	NEMA 1G*	65	UTIL VIA...

* G = GASKETED

LOAD DESCRIPTION	PHASE	RPM	ENCLOSURE	HP	VOLTS	CURRENT	KVA	LOAD TYPE	CONTINUOUS/ INTERMITTENT/ SPARE	STARTER TYPE	DEMAND FACTOR	DEMAND KVA
P-102 - POTABLE WATER PUMP 1	3	1800	EXTERNAL	350	480	414.00	329.9	M	C	VFD	100%	329.9
P-202 - POTABLE WATER PUMP 2	3	1800	EXTERNAL	350	480	414.00	329.9	M	C	VFD	100%	329.9
P-302 - POTABLE WATER PUMP 3	3	1800	EXTERNAL	350	480	414.00	329.9	M	C	VFD	100%	329.9
P-402 - POTABLE WATER PUMP 4	3	1800	EXTERNAL	350	480	414.00	329.9	M	S	VFD	0%	0.00
250A 480Y/277V PP-1			EXTERNAL		480	200.00	166.2	M	C	FEEDER	100%	166.2
ACTIVE HARMONIC FILTER (400A...	3	-	EXTERNAL	-	480	-		F		FEEDER	0%	0.0

LOAD TYPES:
M = MOTOR
F = FEEDER
B = BRANCH
C = CONTINUOUS
I = INTERMITTENT
S = STANDBY

RATIO ISC/IL:	22.9	TOTAL CONNECTED KVA:	1485.6	DEMAND AT PLANT OUTPUT (KVA):	1155.8
MAX CURRENT DISTORTION TDDi %:	8.0	TOTAL CONNECTED AMPS:	1856.0	FEEDER CALC NEC 215 (KVA):	1444.7
MAX VOLTAGE DISTORTION THDv %:	8.0	MIN BUS SIZE:	1737.7	FEEDER CALC NEC 430 (KVA):	1238.2
HARMONIC GEN. LOAD CURRENT...	1406.5	BUS SIZE:	2000	TOTAL FEEDER AMPS (A):	1737.7
TDD HARMONICS (A):	482.0	TRANSFORMER Z, (%):	5.46% (1)	DIVERSITY LOAD (A):	1442.0
HARMONIC CORRECTION REC'D. (A):	353.5	MAXIMUM FAULT CURRENT...	36715.9	UTILITY TRANSFORMER SIZE (KVA):	1500
HARMONIC FILTER SIZE (A): (SEE NOTE BELOW)	400				

NOTE: ESTIMATION OF EXPECTED HARMONICS IS CALCULATED USING 3% LINE REACTORS. CONTRACTOR TO PROVIDE HARMONICS BASED ON EQUIPMENT PROVIDED.

KEYED NOTES: (#)

1. TRANSFORMER IMPEDANCE IS AN ASSUMED NUMBER. COORDINATE WITH THE UTILITY FOR FINAL VALUE.

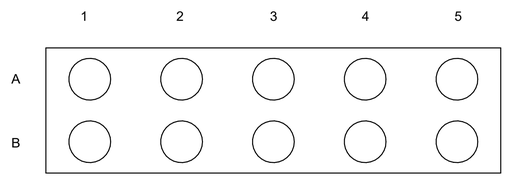

DUCT BANK A

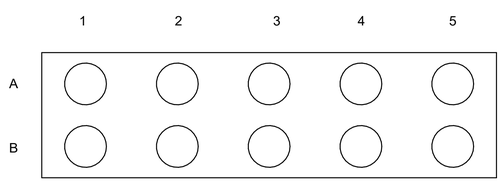

DUCT BANK B

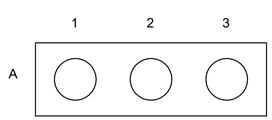

DUCT BANK C

DUCT SCHEDULE A

DUCT ID	DUCT SIZE	CIRCUIT DESCRIPTION	ORIGIN	DESTINATION
A1	4	3-600KCMIL, 250KCMIL GND, 4"C	GEN-001	ATS-001
A2	4	3-600KCMIL, 250KCMIL GND, 4"C	GEN-001	ATS-001
A3	4	SPARE	GEN-001	ATS-001
A4	4	P12	GEN-001	LP-1
A5	4	3-600KCMIL, 250KCMIL GND, 4"C	GEN-001	ATS-001
B1	4	3-600KCMIL, 250KCMIL GND, 4"C	GEN-001	ATS-001
B2	4	SPARE	GEN-001	ATS-001
B3	4	SPARE	GEN-001	ATS-001
B4	4	3-600KCMIL, 250KCMIL GND, 4"C	GEN-001	ATS-001
B5	4	3-600KCMIL, 250KCMIL GND, 4"C	GEN-001	ATS-001

DUCT SCHEDULE B

DUCT ID	DUCT SIZE	CIRCUIT DESCRIPTION	ORIGIN	DESTINATION
A1	4	3-600KCMIL, 250KCMIL GND, 4"C	UTILITY TRANSFORMER TX-001	ATS-001 VIA METERING CABINET
A2	4	3-600KCMIL, 250KCMIL GND, 4"C	UTILITY TRANSFORMER TX-001	ATS-001 VIA METERING CABINET
A3	4	SPARE	UTILITY TRANSFORMER TX-001	ATS-001 VIA METERING CABINET
A4	4	SPARE	UTILITY TRANSFORMER TX-001	ATS-001 VIA METERING CABINET
A5	4	3-600KCMIL, 250KCMIL GND, 4"C	UTILITY TRANSFORMER TX-001	ATS-001 VIA METERING CABINET
B1	4	3-600KCMIL, 250KCMIL GND, 4"C	UTILITY TRANSFORMER TX-001	ATS-001 VIA METERING CABINET
B2	4	SPARE	UTILITY TRANSFORMER TX-001	ATS-001 VIA METERING CABINET
B3	4	SPARE	UTILITY TRANSFORMER TX-001	ATS-001 VIA METERING CABINET
B4	4	3-600KCMIL, 250KCMIL GND, 4"C	UTILITY TRANSFORMER TX-001	ATS-001 VIA METERING CABINET
B5	4	3-600KCMIL, 250KCMIL GND, 4"C	UTILITY TRANSFORMER TX-001	ATS-001 VIA METERING CABINET

DUCT SCHEDULE C

DUCT ID	DUCT SIZE	CIRCUIT DESCRIPTION	ORIGIN	DESTINATION
A1	2	SPARE	GEN-001	RTU
A2	2	C2	GEN-001	RTU
A3	2	N1	GEN-001	RTU

no.	date	by	ckd	description
0	02/12/26	AMM	MAH	ISSUED FOR BID

PROFESSIONAL ENGINEER
MARK A HOPKINS
19652
DATE: 02/12/2026
WYOMING

BURNS McDONNELL
9191 S. JAMAICA STREET
ENGLEWOOD, CO 80112
Burns & McDonnell Engineering Co, Inc

Issue date: FEBUARY 2026
detailed by: A.BENSON
designed by: A. MORRONI
checked by: M. HOPKINS

SUNRISE ENGINEERING

CROSSROADS PUMP STATION
ELECTRICAL
LOAD AND DUCTBANK SCHEDULES

project: 124784
contract:
drawing: 00E-100
rev.: 0
sheet 52 of 99 sheets

Scale For Microfilming: Millimeters / Inches
2/12/2026 1:33:21 PM
Autodesk Docs://124784_Crossroads/124784_CROSSROADS_MEP_R24.rvt

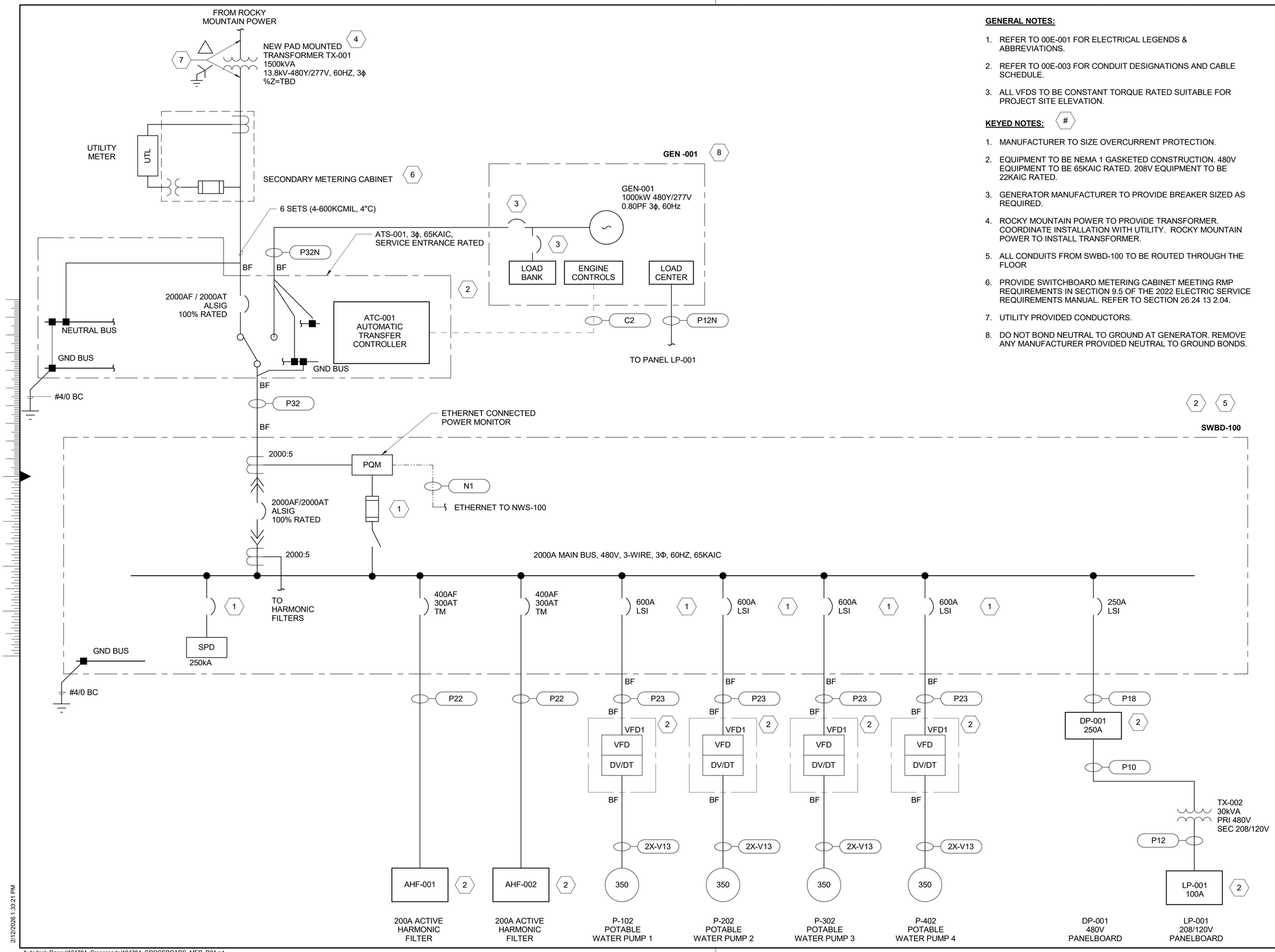

GENERAL NOTES:

1. REFER TO 00E-001 FOR ELECTRICAL LEGENDS & ABBREVIATIONS.
2. REFER TO 00E-003 FOR CONDUIT DESIGNATIONS AND CABLE SCHEDULE.
3. ALL VFDS TO BE CONSTANT TORQUE RATED SUITABLE FOR PROJECT SITE ELEVATION.

KEYED NOTES: #

1. MANUFACTURER TO SIZE OVERCURRENT PROTECTION.
2. EQUIPMENT TO BE NEMA 1 GASKETED CONSTRUCTION. 480V EQUIPMENT TO BE 65KAIC RATED. 208V EQUIPMENT TO BE 22KAIC RATED.
3. GENERATOR MANUFACTURER TO PROVIDE BREAKER SIZED AS REQUIRED.
4. ROCKY MOUNTAIN POWER TO PROVIDE TRANSFORMER. COORDINATE INSTALLATION WITH UTILITY. ROCKY MOUNTAIN POWER TO INSTALL TRANSFORMER.
5. ALL CONDUITS FROM SWBD-100 TO BE ROUTED THROUGH THE FLOOR
6. PROVIDE SWITCHBOARD METERING CABINET MEETING RMP REQUIREMENTS IN SECTION 9.5 OF THE 2022 ELECTRIC SERVICE REQUIREMENTS MANUAL. REFER TO SECTION 26 24 13 2.04.
7. UTILITY PROVIDED CONDUCTORS.
8. DO NOT BOND NEUTRAL TO GROUND AT GENERATOR. REMOVE ANY MANUFACTURER PROVIDED NEUTRAL TO GROUND BONDS.

no.	date	by	ckd	description
0	02/12/26	AMM	MAH	ISSUED FOR BID

PROFESSIONAL ENGINEER MARK A HOPKINS 19652 DATE: 02/12/2026 WYOMING

BURNS McDONNELL
9191 S. JAMAICA STREET
ENGLEWOOD, CO 80112
Burns & McDonnell Engineering Co, Inc

Issue date: FEBUARY 2026	detailed by: A.BENSON
designed by: A. MORRONI	checked by: M. HOPKINS

SUNRISE ENGINEERING

CROSSROADS PUMP STATION
ELECTRICAL
ONE-LINE DIAGRAMS

project: 124784	contract:
drawing: 00E-110	rev.: 0

sheet 53 of 99 sheets

Scale For Microfilming: Millimeters / Inches

2/12/2026 1:33:21 PM

Autodesk Docs://124784_Crossroads/124784_CROSSROADS_MEP_R24.rvt

PANELBOARD:	DP-001	MAIN BUS:	250 A	MAIN BREAKER/MLO:	250 A
VOLTS:	480Y/277	PHASE:	3	SYM. A.I.C. MIN.:	65KAIC
FED FROM:	SWBD-100	WIRE:	3	ENCLOSURE:	NEMA 1G
LOCATION:	ELECTRICAL ROOM			MOUNTING:	SURFACE

DESCRIPTION	NO. POLES	TRIP AMPS	POLE NO.		LOAD - VA A	LOAD - VA B	LOAD - VA C		POLE NO.	TRIP AMPS	NO. POLES	DESCRIPTION
EXHAUST FAN EF-1	3	20	1	<--	500.00				2	20	3	AIR HANDLER AH-3
					2576.00			-->				
			3	<--		500.00			4			
						2576.00		-->				
			5	<--			500.00		6			
							2576.00	-->				
EXHAUST FAN EF-2	3	20	7	<--	500.00				8	20	3	AIR HANDLER AH-4
					2576.00			-->				
			9	<--		500.00			10			
						2576.00		-->				
			11	<--			500.00		12			
							2576.00	-->				
EXHAUST FAN EF-3	3	20	13	<--	500.00				14	20	3	AIR HANDLER AH-5
					2576.00			-->				
			15	<--		500.00			16			
						2576.00		-->				
			17	<--			500.00		18			
							2576.00	-->				
EXHAUST FAN EF-4	3	20	19	<--	600.00				20	20	3	AIR HANDLER AH-6
					2576.00			-->				
			21	<--		600.00			22			
						2576.00		-->				
			23	<--			600.00		24			
							2576.00	-->				
AIR HANDLER AH-1	3	20	25	<--	2176.00				26	20	3	AIR HANDLER AH-7
					2576.00			-->				
			27	<--		2176.00			28			
						2576.00		-->				
			29	<--			2176.00		30			
							2576.00	-->				
AIR HANDLER AH-2	3	20	31	<--	2176.00				32	15	3	SPARE
					0.00			-->				
			33	<--		2176.00			34			
						0.00		-->				
			35	<--			2176.00		36			
							0.00	-->				
BRIDGE CRANE BC-1	3	25	37	<--	2483.00				38	15	3	SPARE
					0.00			-->				
			39	<--		2483.00			40			
						0.00		-->				
			41	<--			2483.00		42			
							0.00	-->				
OVERHEAD DOOR OHD-1	3	15	43	<--	497.00				44	15	3	SPARE
					0.00			-->				
			45	<--		497.00			46			
						0.00		-->				
			47	<--			497.00		48			
							0.00	-->				
SPD 50KA	3	30	49	<--	0.00				50	80	3	LP-1 VIA TX-002 30kVA
					10000.00			-->				
			51	<--		0.00			52			
						10000.00		-->				
			53	<--			0.00		54			
							10000.00	-->				

Total kVA Per Phase Load (Including Existing)=	32.31	32.31	32.31	Demand Factor	100.0%
Unbalance load	0.0%	0.0%	0.0%		
Maximum Unbalance load =			0.0%		
Total Connected Load				Est. Demand Load	
96.94 kVA	116.60 A			96.94 kVA	116.60

PANELBOARD:	LP-001	MAIN BUS:	100 A	MAIN BREAKER/MLO:	100 A
VOLTS:	208Y/120V	PHASE:	3	SYM. A.I.C. MIN.:	22KAIC
FED FROM:	DP-001	WIRE:	4	ENCLOSURE:	NEMA 1G
LOCATION:	ELECTRICAL ROOM			MOUNTING:	SURFACE

DESCRIPTION	NO. POLES	TRIP AMPS	POLE NO.		LOAD - VA A	LOAD - VA B	LOAD - VA C		POLE NO.	TRIP AMPS	NO. POLES	DESCRIPTION
LIGHTING - ELEC RM	1	20	1	<--	251.00				2	20	1	RECEPT - ELEC RM
					540.00			-->				
LIGHTING - PUMP RM	1	20	3	<--		964.00			4	20	1	RECEPT - PIPE GALLERY
						720.00		-->				
LIGHTING - EXTERIOR	1	20	5	<--			470.00		6	20	1	RECEPT - PUMP RM
							1260.00	-->				
LIGHTING - PIPE GALLERY	1	15	7	<--	105.00				8	20	1	RECEPT - EXTERIOR
					720.00			-->				
SPARE	1	15	9	<--		0.00			10	20	1	SPARE
						0.00		-->				
LOUVER L-1	1	15	11	<--			187.00		12	20	1	PUMP STATION RTU
							1000.00	-->				
LOUVER L-2	1	15	13	<--	187.00				14	100	2	GEN LOAD CENTER
					5000.00			-->				
LOUVER L-3	1	15	15	<--		187.00			16			
						5000.00		-->				
LOUVER L-4	1	15	17	<--			187.00		18	15	1	RECEPT - SUMP PUMP
							750.00	-->				
LOUVER L-5	1	15	19	<--	187.00				20	20	1	SPARE
					0.00			-->				
LOUVER L-6	1	15	21	<--		187.00			22	20	1	SPARE
						0.00		-->				
EXHAUST FAN EF-5	1	15	23	<--			187.00		24	20	1	SPARE
							0.00	-->				
SPARE	1	15	25	<--	0.00				26	20	1	SPARE
					0.00			-->				
SPARE	1	15	27	<--		0.00			28	20	1	SPARE
						0.00		-->				
SPARE	1	15	29	<--			0.00		30	20	1	SPARE
							0.00	-->				
SPARE	1	20	31	<--	0.00				32	20	1	SPARE
					0.00			-->				
SPARE	1	20	33	<--		0.00			34	20	2	SITE LIGHTING
						246.00		-->				
SPARE	1	20	35	<--			0.00		36			
							246.00	-->				
SPARE	1	20	37	<--	0.00				38	30	3	SPD 50KA
					0.00			-->				
SPARE	1	20	39	<--		0.00			40			
						0.00		-->				
SPARE	1	20	41	<--			0.00		42			
							0.00	-->				

Total kVA Per Phase Load (Including Existing)=	6.99	7.30	4.29	Demand Factor	100.0%
Unbalance load	12.9%	17.9%	30.8%		
Maximum Unbalance load =			30.8%		
Total Connected Load				Est. Demand Load	
18.58 kVA	51.58 A			18.58 kVA	51.58

no.	date	by	ckd	description
0	02/12/26	AMM	MAH	ISSUED FOR BID

PROFESSIONAL ENGINEER
MARK A. HOPKINS
19652
DATE: 02/12/2026
WYOMING

BURNS McDONNELL
9191 S. JAMAICA STREET
ENGLEWOOD, CO 80112
Burns & McDonnell Engineering Co, Inc

Issue date	detailed by
FEBUARY 2026	A.BENSON
designed by	checked by
A. MORRONI	M. HOPKINS

SUNRISE ENGINEERING

CROSSROADS PUMP STATION
ELECTRICAL
PANEL SCHEDULES

project	contract
124784	

drawing **00E-120** — rev. **0**

sheet 54 of 99 sheets

Scale For Microfilming: Millimeters / Inches

2/12/2026 1:33:21 PM

Autodesk Docs://124784_Crossroads/124784_CROSSROADS_MEP_R24.rvt

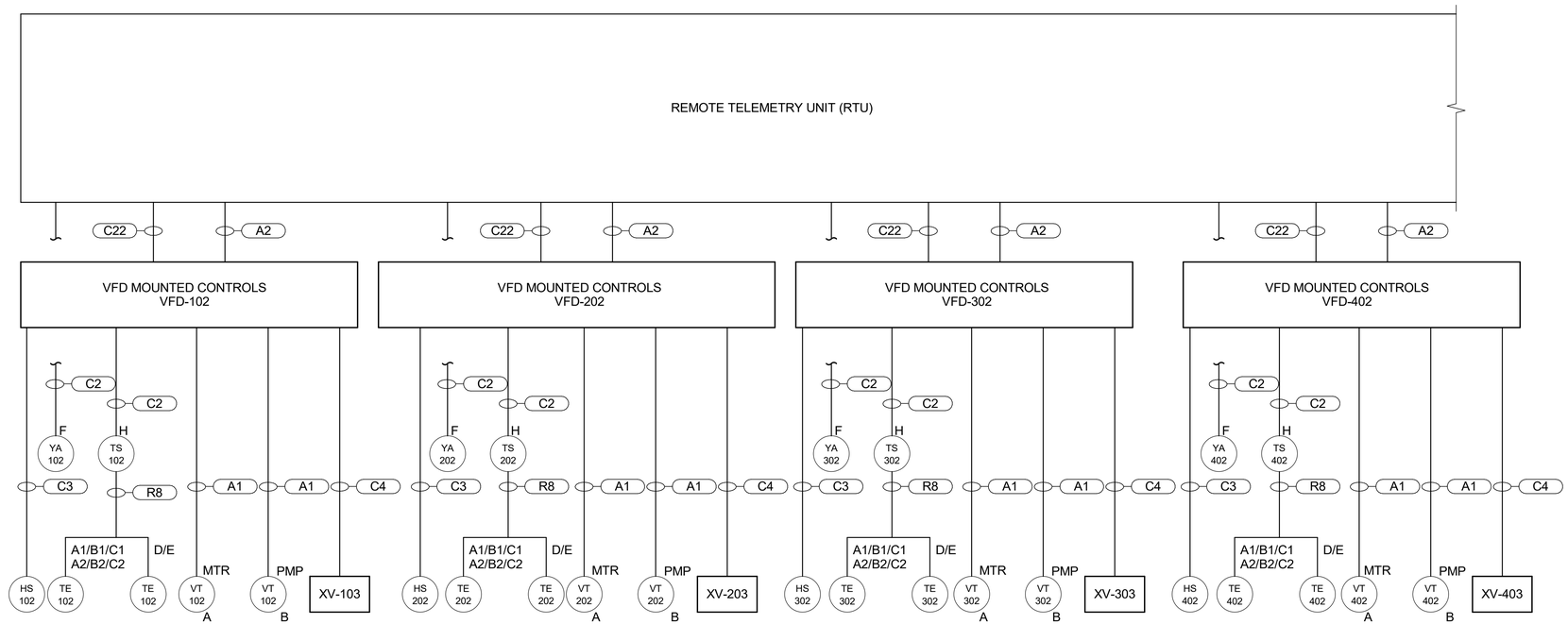

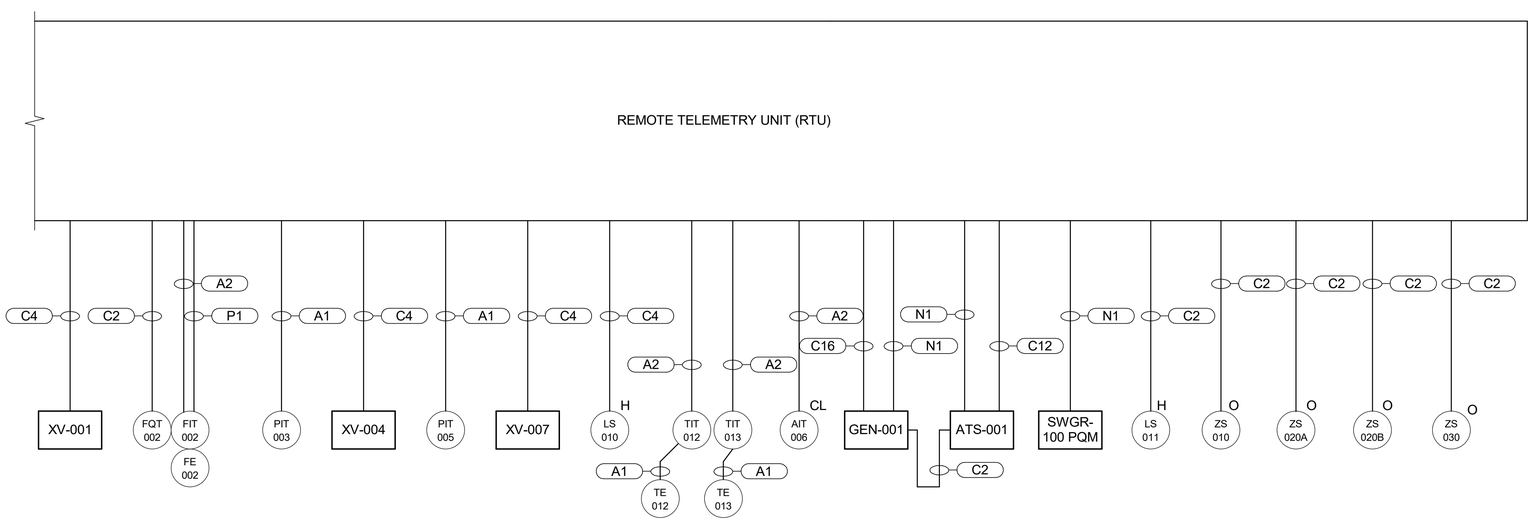

no.	date	by	ckd	description
0	02/12/26	AMM	MAH	ISSUED FOR BID

PROFESSIONAL ENGINEER
MARK A. HOPKINS
19652
DATE: 02/12/2026
WYOMING

BURNS McDONNELL
9191 S. JAMAICA STREET
ENGLEWOOD, CO 80112
Burns & McDonnell Engineering Co, Inc

Issue date FEBUARY 2026	**detailed by** A.BENSON
designed by A. MORRONI	**checked by** M. HOPKINS

SUNRISE ENGINEERING

CROSSROADS PUMP STATION
ELECTRICAL
CONNECTION DIAGRAM

project 124784	**contract**

drawing 00E-150 — **rev.** 0

sheet 55 **of** 99 **sheets**

Scale For Microfilming
Millimeters
Inches
2/12/2026 1:33:22 PM

Autodesk Docs://124784_Crossroads/124784_CROSSROADS_MEP_R24.rvt

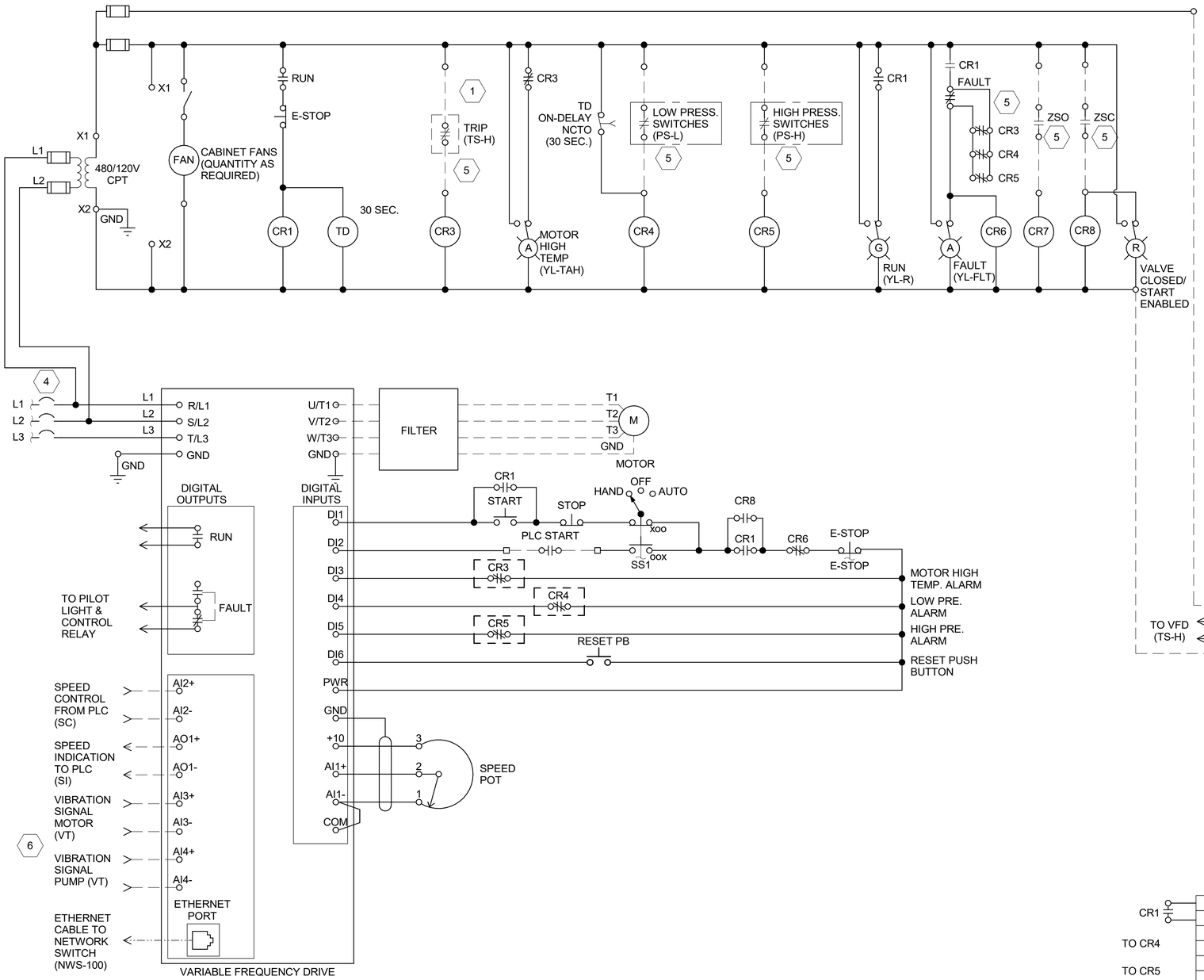

TYPICAL VARIABLE FREQUENCY DRIVE DIAGRAM - VFD1

GENERAL NOTES:

1. REFER TO SPECIFICATION SECTION 40 61 96 - PROCESS CONTROL SOFTWARE PROGRAMMING AND REPORTS FOR DESCRIPTION OF OPERATION AND I/O POINTS TO BE INTEGRATED INTO THE PLANT CONTROL SYSTEM.
2. SCHEMATIC SHOWN IS A REPRESENTATION OF THE INTENDED OPERATION. PROVIDE ADDITIONAL COMPONENTS AND MODIFY THE WIRING AS REQUIRED TO PERFORM THE CONTROL FUNCTIONS BASED ON THE SELECTED MANUFACTURER.
3. CR2 NOT USED.

KEYED NOTES: (#)

1. RTD MONITORING BY DEDICATED DEVICE, NOT BY PLC. RTD UNIT OPERATES PERMISSIVE CONTACT IN WIRED CONTROL LAYER.
2. SPECIFIC MODEL OF TECH SYSTEMS RTD MONITOR SHALL BE COORDINATED TO MATCH MOTOR RTD TYPE.
3. MOUNTED LOCALLY TO THE PUMP. TRIP SETTING SHALL BE PER PUMP/MOTOR MANUFACTURER RECOMMENDATIONS.
4. BREAKER TO BE SIZED BY VFD MANUFACTURER.
5. ZSC CLOSES WHEN DISCHARGE VALVE IS IN THE CLOSED POSITION. ZCO CLOSES WHEN DISCHARGE VALVE IS IN THE OPEN POSITION. LOW PRESSURE SWITCH CONTACT OPEN ON LOW PRESSURE HIGH TEMPERATURE SWITCH CONTACT OPENS ON HIGH TEMP HIGH PRESSURE SWITCH CONTACT OPENS ON HIGH PRESS. FAULT CONTACTS HELD OPEN AND CLOSE UNDER FAULT CONDITION.
6. PROVIDE AN ADDITIONAL I/O CARD IF REQUIRED.

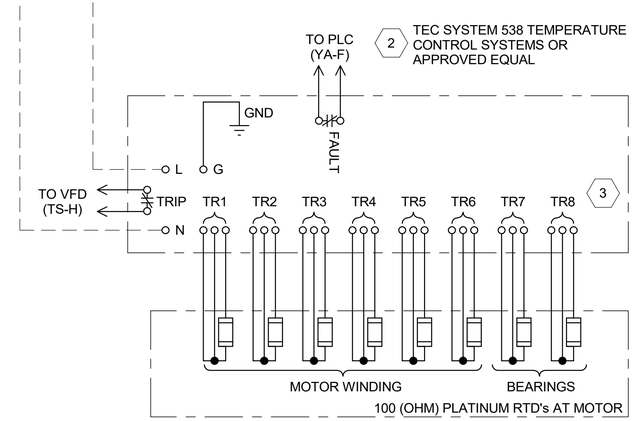

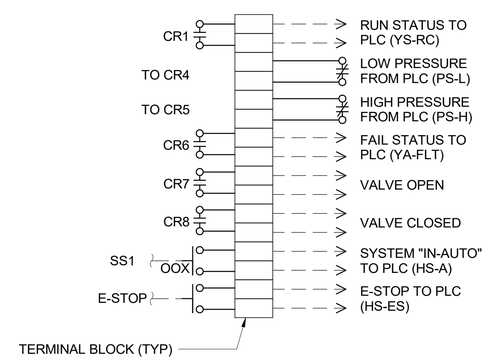

no.	date	by	ckd	description
0	02/12/26	AMM	MAH	ISSUED FOR BID

PROFESSIONAL ENGINEER MARK A. HOPKINS 19652 DATE: 02/12/2026 WYOMING

BURNS McDONNELL
9191 S. JAMAICA STREET
ENGLEWOOD, CO 80112
Burns & McDonnell Engineering Co, Inc

Issue date	detailed by
FEBUARY 2026	A.BENSON
designed by	**checked by**
A. MORRONI	M. HOPKINS

SUNRISE ENGINEERING

CROSSROADS PUMP STATION
ELECTRICAL
MOTOR CONTROL SCHEMATICS

project	contract
124784	

drawing **00E-200** — rev. **0**

sheet 56 of 99 sheets

Scale For Microfilming: Millimeters / Inches

2/12/2026 1:33:23 PM

Autodesk Docs://124784_Crossroads/124784_CROSSROADS_MEP_R24.rvt

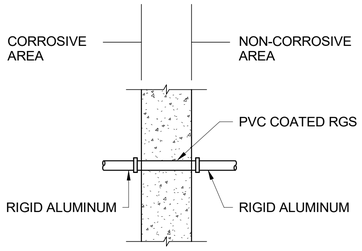

GENERAL NOTE:

1. TYPICAL INTERIOR (CORROSIVE AREAS) EXPOSED CONDUIT INSTALLATION THROUGH CONCRETE/CMU WALL DETAIL

INTERIROR EXOSED CONDUIT (CORROSIVE) THROUGH WALL
NOT TO SCALE

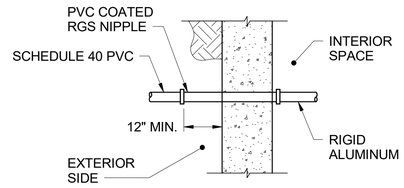

GENERAL NOTE:

1. TYPICAL BELOW GRADE CONDUIT THROUGH CONCRETE WALL DETAIL

BELOW GRADE CONDUIT CAST IN WALL
NOT TO SCALE

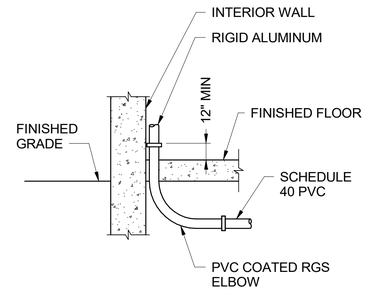

INTERIOR STUB-UP
NOT TO SCALE

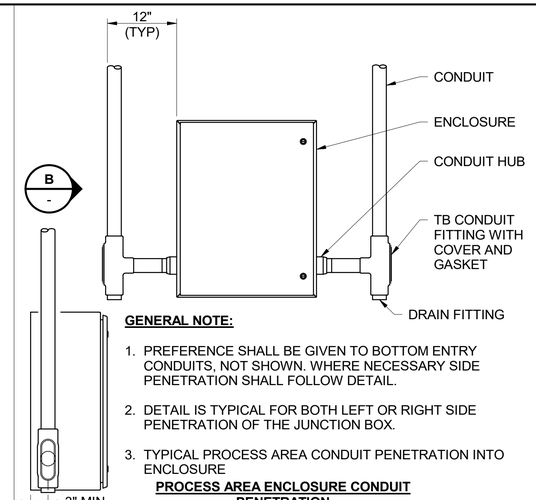

GENERAL NOTE:

1. PREFERENCE SHALL BE GIVEN TO BOTTOM ENTRY CONDUITS, NOT SHOWN. WHERE NECESSARY SIDE PENETRATION SHALL FOLLOW DETAIL.
2. DETAIL IS TYPICAL FOR BOTH LEFT OR RIGHT SIDE PENETRATION OF THE JUNCTION BOX.
3. TYPICAL PROCESS AREA CONDUIT PENETRATION INTO ENCLOSURE

PROCESS AREA ENCLOSURE CONDUIT PENETRATION
NOT TO SCALE

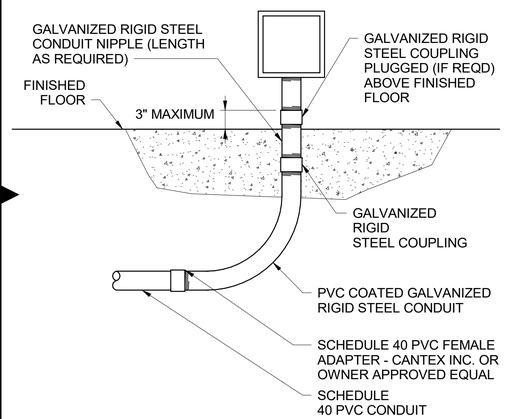

GENERAL NOTES:

1. BACKFILL -
   A. OBTAIN BACKFILL MATERIALS FROM TRENCHES AND OTHER EXCAVATION IN THIS CONTRACT AND/OR FROM THE ON SITE BORROW AREAS AS DESIGNATED BY THE RESIDENT PROJECT REPRESENTATIVE.
   B. BACKFILL MATERIALS INCLUDE MATERIAL THAT IS FREE OF DEBRIS, ROOTS, ORGANIC MATTER, REFUSE, CINDERS, FROZEN MATTER, AND ALSO FREE OF ROCK, WITH A DIMENSION GREATER THAN 2 INCHES.
2. COMPACTION -
   A. PLACE BACKFILL MATERIAL IN LEVEL LAYERS NOT EXCEEDING 8 INCHES.
   B. USE HAND METHODS TO A HORIZONTAL PLANE OF 12 INCHES ABOVE TOP OF CONDUIT.
   C. USE APPROVED MECHANICAL METHODS WHERE HAND BACKFILL IS NOT REQUIRED.
   D. FOR BACKFILL COMPACTION AND MOISTURE CONTENT REQUIREMENTS SE SECTION 2A (SITE WORK PREPARATION AND EARTHWORK) OF SPECIFICATIONS.
3. DETAIL ALSO APPLIES TO MULTIPLE CONDUIT INSTALLATION AND DIRECT BURIED CABLE.
4. BACKFILL AND COMPACTION REQUIREMENTS ALSO APPLY TO ROADWAY LIGHTING FOUNDATIONS.

ONE CONDUIT RISER
NOT TO SCALE

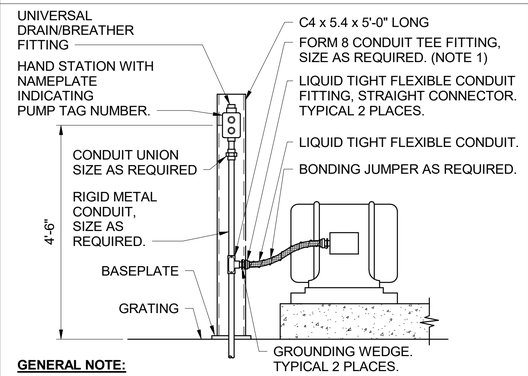

GENERAL NOTE:

1. LOCATE TEE FITTING BELOW ELEVATION OF MOTOR TERMINAL HOUSING TO ALLOW ANY ACCUMULATION OF MOISTURE TO FLOW TOWARD THE DRAIN.
2. MOTOR TERMINATION FOR MOTORS LESS THAN 60HP WITH FEEDER COMING FROM BELOW

FLOOR-FED MOTOR W/ CONTROL STATION
NOT TO SCALE

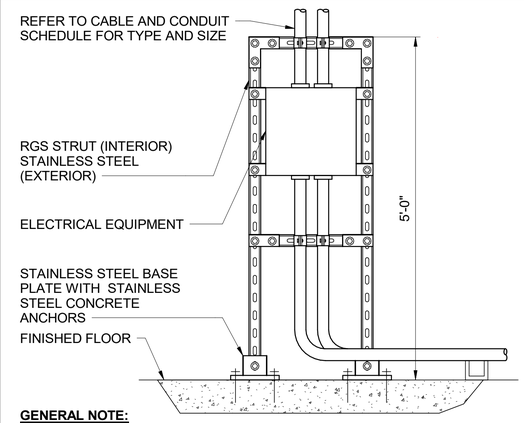

GENERAL NOTE:

1. RACK SIZE IS FOR INFORMATION PURPOSES ONLY. RACK SIZES SHALL BE SIZED TO SUPPORT EQUIPMENT SHOWN ON PLANS.

RACK ELEVATION
NOT TO SCALE

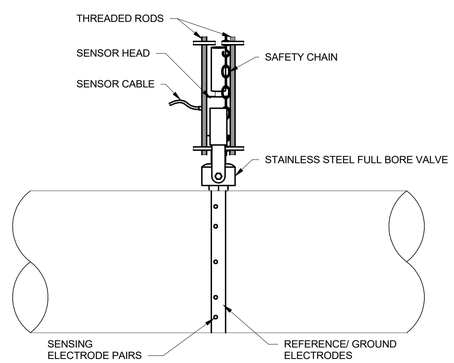

GENERAL NOTES:

1. COORDINATE HOLE AND TAP SIZE WITH MANUFACTURER.
2. CONTRACTOR TO VERIFY FLOW METER SIZING AND DIMENSIONS FOR PROJECT PIPE SIZE AND FLOW RATES.

INSERTION ELECTROMAGNETIC FLOW METER
NOT TO SCALE

no.	date	by	ckd	description
0	02/12/26	AMM	MAH	ISSUED FOR BID

BURNS McDONNELL
9191 S. JAMAICA STREET
ENGLEWOOD, CO 80112
Burns & McDonnell Engineering Co, Inc

Issue date: FEBUARY 2026	detailed by: A.BENSON
designed by: A. MORRONI	checked by: M. HOPKINS

SUNRISE ENGINEERING

CROSSROADS PUMP STATION
ELECTRICAL
DETAILS I

project: 124784	contract:
drawing: 00E-300	rev.: 0

sheet 57 of 99 sheets

Scale For Microfilming: Millimeters / Inches

2/12/2026 1:33:23 PM

Autodesk Docs://124784_Crossroads/124784_CROSSROADS_MEP_R24.rvt

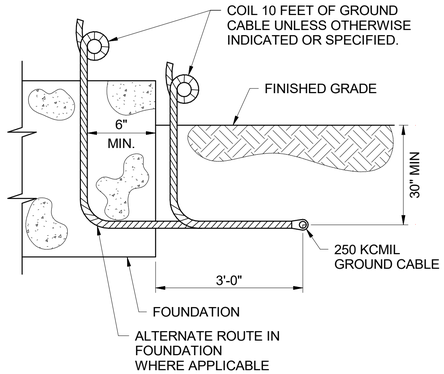

BURIED GROUND GRID
NOT TO SCALE

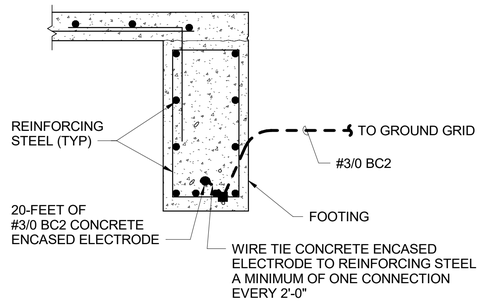

CONCRETE ENCASED ELECTRODE (FOOTER)
NOT TO SCALE

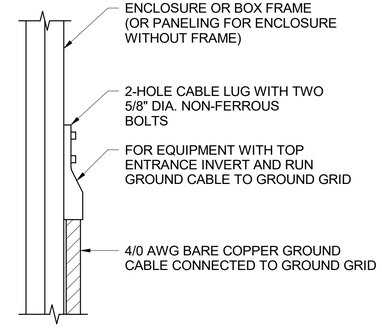

EQUIPMENT ENCLOSURE GROUNDING
NOT TO SCALE

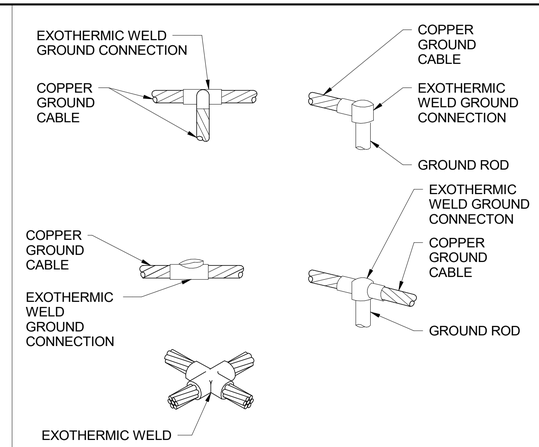

EXOTHERMIC WELDS
NOT TO SCALE

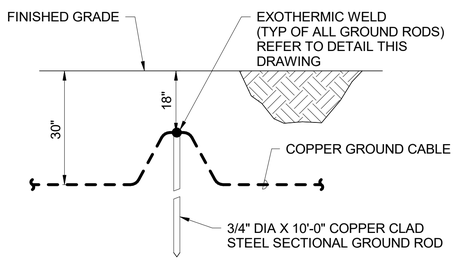

GROUND ROD INSTALLATION
NOT TO SCALE

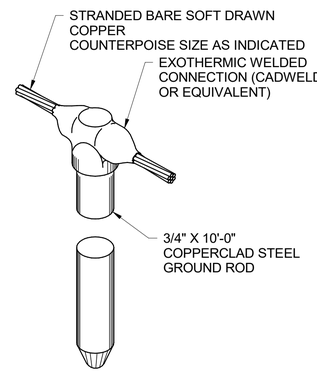

GROUND ROD WELD
NOT TO SCALE

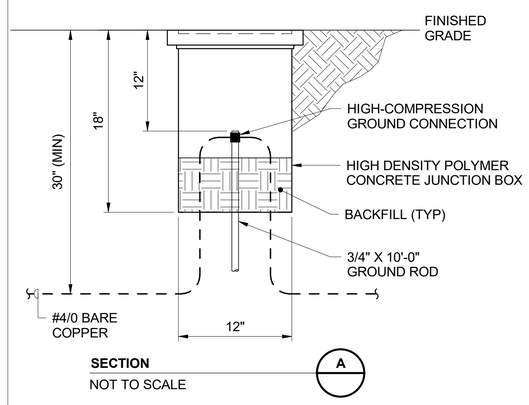

SECTION
NOT TO SCALE

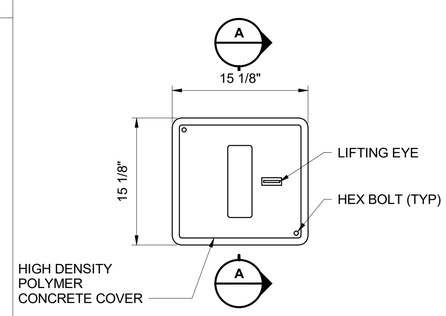

GROUND TEST WELL
NOT TO SCALE

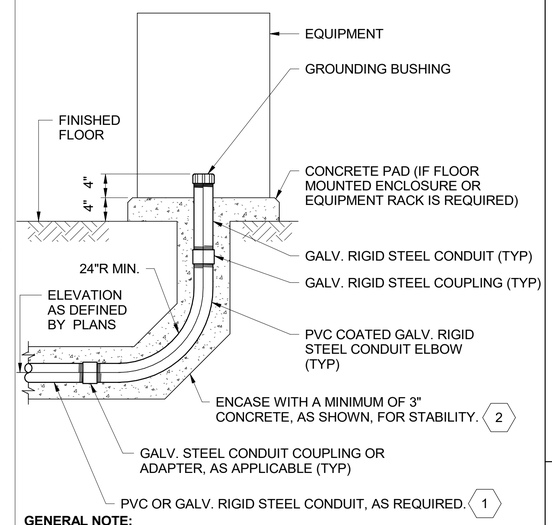

GENERAL NOTE:

1. THIS DETAIL IS TYPICAL FOR SINGLE AND MULTI-DUCT ARRANGEMENTS.

KEYED NOTES: #

1. USE RIGID GALVANIZED STEEL CONDUITS WHERE A DUCT BANK CROSSES UNDER DEFINED ROADWAYS, RAILROADS AND FOR A DISTANCE OF 10 FEED BEYOND EACH SIDE.
2. ALL DUCT BANKS SHALL BE REINFORCED AS SHOWN IN DUCT BANK TRENCH DETAIL ON DRAWING 00E-303.

EXTERIOR DUCT BANK RISER
NOT TO SCALE

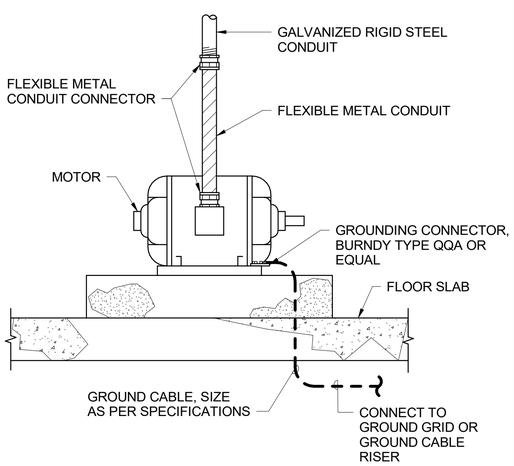

LARGE MOTOR GROUNDING
NOT TO SCALE

no.	date	by	ckd	description
0	02/12/26	AMM	MAH	ISSUED FOR BID

PROFESSIONAL ENGINEER
MARK A. HOPKINS
19652
DATE: 02/12/2026
WYOMING

BURNS McDONNELL
9191 S. JAMAICA STREET
ENGLEWOOD, CO 80112
Burns & McDonnell Engineering Co, Inc

Issue date	detailed by
FEBUARY 2026	A.BENSON
designed by	**checked by**
A. MORRONI	M. HOPKINS

SUNRISE ENGINEERING

CROSSROADS PUMP STATION
ELECTRICAL
DETAILS II

project	contract
124784	

drawing **00E-301** — rev. **0**

sheet 58 of 99 sheets

Scale For Microfilming: Millimeters / Inches

2/12/2026 1:33:23 PM

Autodesk Docs://124784_Crossroads/124784_CROSSROADS_MEP_R24.rvt

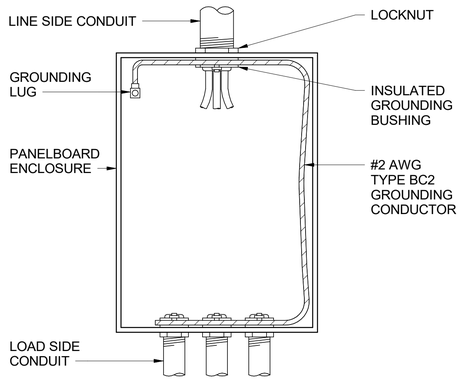

PANELBOARD GROUNDING
NOT TO SCALE

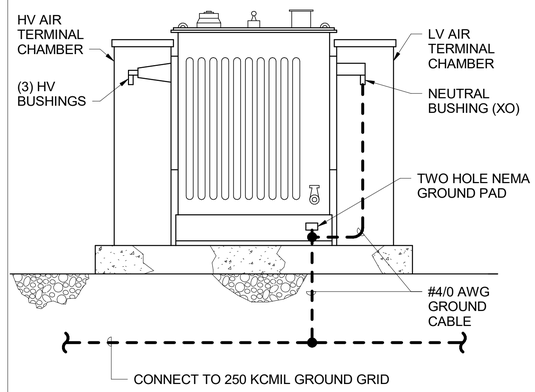

TRANSFORMER GROUNDING (ONE CONNECTION)
NOT TO SCALE

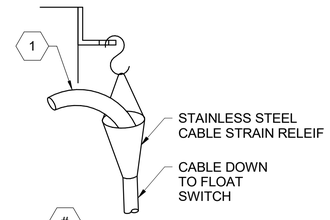

KEYED NOTE: #

1. INSTALL TERMINAL BLOCKS IN JUCTION BOX FOR TERMINATION OF MANUFACTURER'S SUPPLIED CABLE.

CABLE STRAIN RELEIF
NOT TO SCALE

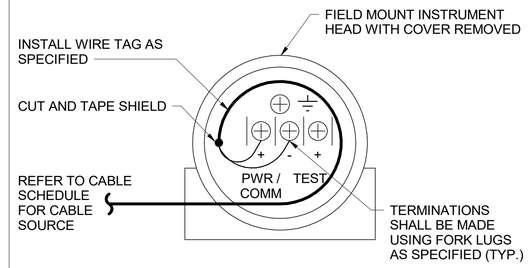

GENERAL NOTE:

1. REFER TO PLC DRAWINGS (XXX-SERIES) FOR SPECIFIC DEVICE WIRING AND TERMINATIONS.

INSTRUMENT WIRING
NOT TO SCALE

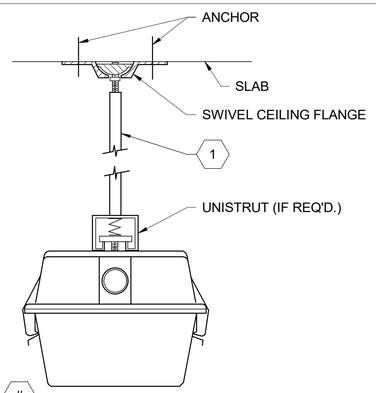

KEYED NOTE: #

1. ADJUST ROD LENGTH ACCORDING TO MOUNTING HEIGHT SHOWN ON LIGHTING PLANS.

GASKETED STRIP LUMINAIRE MOUNTING
NOT TO SCALE

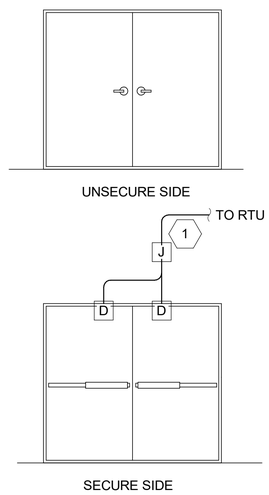

GENERAL NOTES:

1. ALL CONDUIT SHALL BE INSTALLED WITHIN WALL IF DEVICES ARE LOCATED IN A FINISHED AREA.
2. ALL CONDUIT SHALL BE 3/4-INCH UNLESS NOTED OTHERWISE.

KEYED NOTES: #

1. JUNCTION BOX SHALL BE INSTALLED A MINIMUM OF 12-INCHES ABOVE CEILING.

DOUBLE DOOR, EXIT ONLY, CRASH BAR
NOT TO SCALE

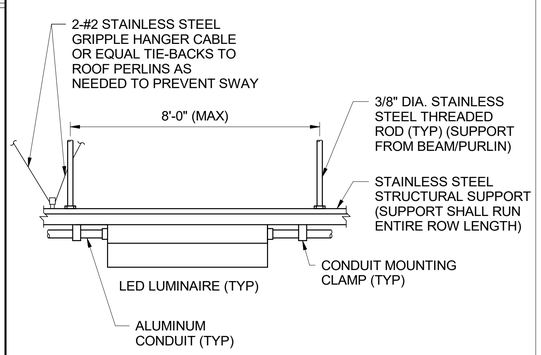

STRIP LUMINAIRE MOUNTING
NOT TO SCALE

no.	date	by	ckd	description
0	02/12/26	AMM	MAH	ISSUED FOR BID

PROFESSIONAL ENGINEER
MARK A. HOPKINS
19652
DATE: 02/12/2026
WYOMING

BURNS McDONNELL
9191 S. JAMAICA STREET
ENGLEWOOD, CO 80112
Burns & McDonnell Engineering Co, Inc

Issue date	detailed by
FEBUARY 2026	A.BENSON
designed by	**checked by**
A. MORRONI	M. HOPKINS

SUNRISE ENGINEERING

CROSSROADS PUMP STATION
ELECTRICAL
DETAILS III

project	contract
124784	

drawing **00E-302** — rev. **0**

sheet 59 of 99 sheets

Scale For Microfilming: Millimeters / Inches

2/12/2026 1:33:24 PM

Autodesk Docs://124784_Crossroads/124784_CROSSROADS_MEP_R24.rvt

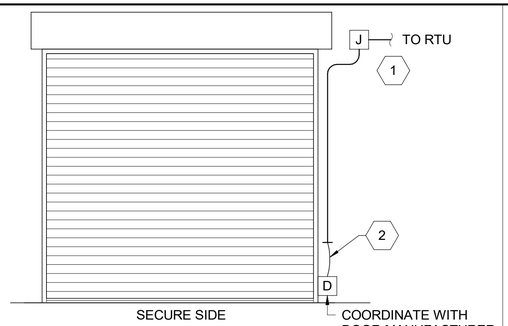

GENERAL NOTES:

1. ALL CONDUIT SHALL BE 3/4-INCH UNLESS NOTED OTHERWISE.

KEYED NOTES: #

1. JUNCTION BOX SHALL BE INSTALLED A MINIMUM OF 10-FEET ABOVE FINISHED FLOOR.
2. INSTALL 18-INCHES OF FLEXIBLE CONDUIT FOR CONNECTION TO DOOR INTRUSION SWITCH.

OVERHEAD DOOR, POSITION SWITCH

NOT TO SCALE

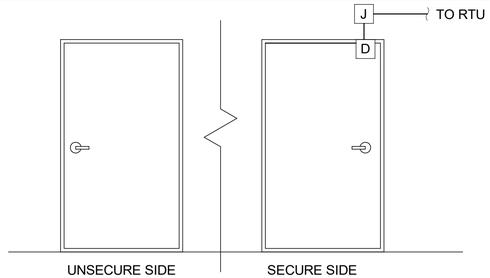

GENERAL NOTES:

1. ALL CONDUIT SHALL BE INSTALLED WITHIN WALL IF DEVICES ARE LOCATED IN A FINISHED AREA.
2. ALL CONDUIT SHALL BE 3/4-INCH UNLESS NOTED OTHERWISE.

SINGLE DOOR, EXIT ONLY, DOOR HANDLE

NOT TO SCALE

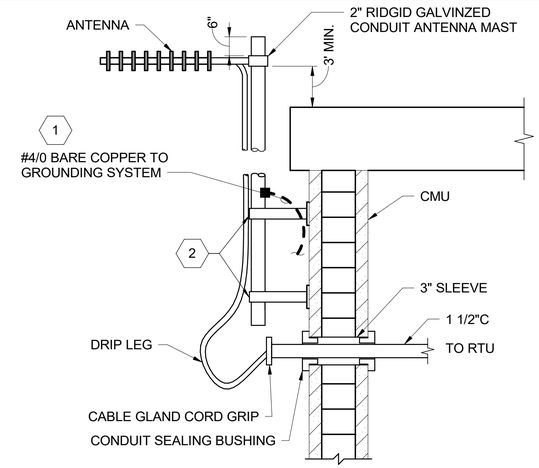

KEYED NOTE: #

1. PROVIDE STAINLESS STEEL MOUNTING HARDWARE PER MANUFACTURER INSTRUCTIONS.
2. CHANNEL STRUT SUPPORT AND 4-HOLE SQUARE BASE W/ 1/2" STAINLESS STEEL MASONRY ANCHORS OR STRUCTURAL ENGINEER APPROVED EQUAL.

ANTENNA MAST MOUNTING - ON CMU

NOT TO SCALE

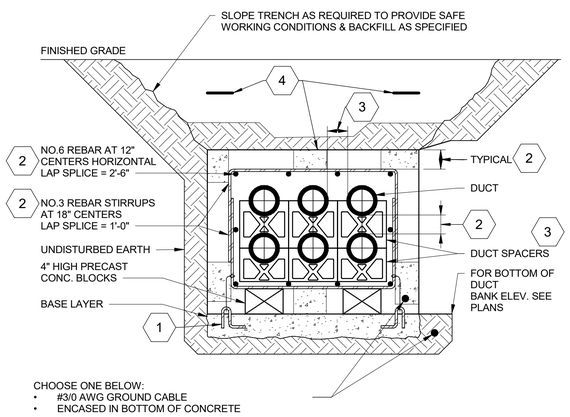

DETAIL NOTES:

1. ALL DUCT BANKS SHALL BE ENCASED IN CONCRETE PER SPECIFICATIONS AND SHALL BE SMOOTH FORMED A MINIMUM OF 3'-0" FROM THE TOP OF THE STUB-UPS. DUCT BANKS MAY BE EARTH FORMED WITH UNDISTRUBED EARTH PROVIDED THE EARTH WILL STAND TO A NEAR VERTICAL SLOPE. IF TRENCH IS OVER-EXCAVATED, COMPACT PER SITEWORK PREPARATION AND EARTHWORK SPECIFICATIONS.
2. REFER TO DUCT BANK SECTIONS FOR DUCT QUANTITY, SIZE AND CONFIGURATION.
3. WHERE DUCT BANKS TERMINATE AT A MANHOLE, HANDHOLE OR OTHER UNDERGROUND STRUCTURE THE DUCTS SHALL BE SLOPED A MINIMUM OF 1/8 IN./FT/ UNLESS OTHERWISE NOTED TO PROVIDE DRAINAGE BACK TO THE STRUCTURE.

KEYED NOTES: #

1. TIE DOWN DUCTS TO BASE LAYER AS REQUIRED TO PREVENT FLOATING DURING CONCRETE PLACEMENT.
2. REINFORCING STEEL SHALL BE USED IN ALL DUCT BANKS UNLESS OTHERWISE NOTED. DO NOT ALLOW REINFORCING STEEL TO BE IN CONTACT WITH DUCTS & PROVIDE A MINIMUM OF 3" OF CONCRETE COVER OVER THE REINFORCING STEEL.
3. INSTALL INTERLOCKING TYPE PLASTIC DUCT SPACERS AT INTERVALS PER SPECIFICATIONS TO MAINTAIN A 3 INCH MINIMUM HORIZONTAL AND VERTICAL SPACING BETWEEN DUCTS.
4. TROWEL RED DYE POWDER INTO THE TOP CONCRETE SURFACE OF DUCT BANK AND PROVIDE METALLIC WARNING TAPES ABOVE THE OUTSIDE EDGES ON BOTH SIDES OF THE DUCT BANK AS CAUTIONARY MARKINGS.

DUCT BANK TRENCH

NOT TO SCALE

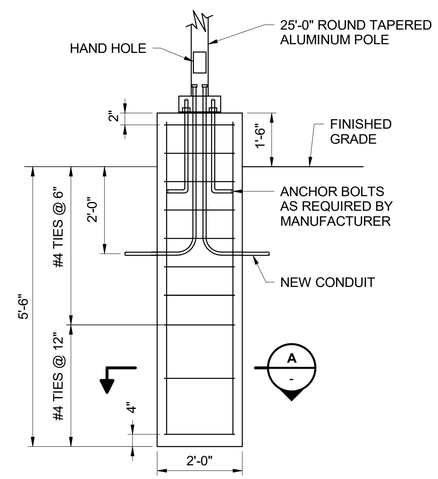

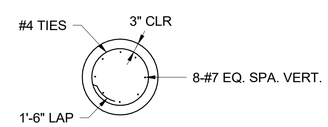

SECTION A -

NOT TO SCALE

POLE BASE FOUNDATION

NOT TO SCALE

no.	date	by	ckd	description
0	02/12/26	AMM	MAH	ISSUED FOR BID

PROFESSIONAL ENGINEER MARK A. HOPKINS 19652 DATE: 02/12/2026 WYOMING

BURNS McDONNELL
9191 S. JAMAICA STREET
ENGLEWOOD, CO 80112
Burns & McDonnell Engineering Co, Inc

Issue date	detailed by
FEBUARY 2026	A.BENSON
designed by	**checked by**
A. MORRONI	M. HOPKINS

SUNRISE ENGINEERING

CROSSROADS PUMP STATION
ELECTRICAL
DETAILS IV

project	contract
124784	

drawing **00E-303** — rev. **0**

sheet 60 of 99 sheets

Scale For Microfilming: Millimeters / Inches

2/12/2026 1:33:25 PM

Autodesk Docs://124784_Crossroads/124784_CROSSROADS_MEP_R24.rvt

GENERAL NOTES:

1. EVERYTHING ON THIS SHEET, EXCEPT PER KEYED NOTE 2, IS CONTRACTOR PROVIDED.

KEYED NOTES: #

1. VENDOR SUPPLIED EQUIPMENT NOT SHOWN IN COMPLETE DETAIL. REFER TO VENDOR SUPPLIED PACKAGE AS REQUIRED.
2. RTU TO BE SUPPLIED BY THE WATER BOARD'S SYSTEM INTEGRATOR AND INSTALLED AND CONNECTED BY THE CONTRACTOR. CONTRACTOR TO AID THE SYSTEM INTEGRATOR IN STARTUP AND TESTING. REFER TO SECTION 40 60 00 FOR OWNER SUPPLIED INTEGRATION EQUIPMENT AND SCOPE OF WORK.
3. COORDINATE WITH WATER BOARD'S SYSTEM INTEGRATOR FOR ANTENNAE CABLE REQUIREMENTS.

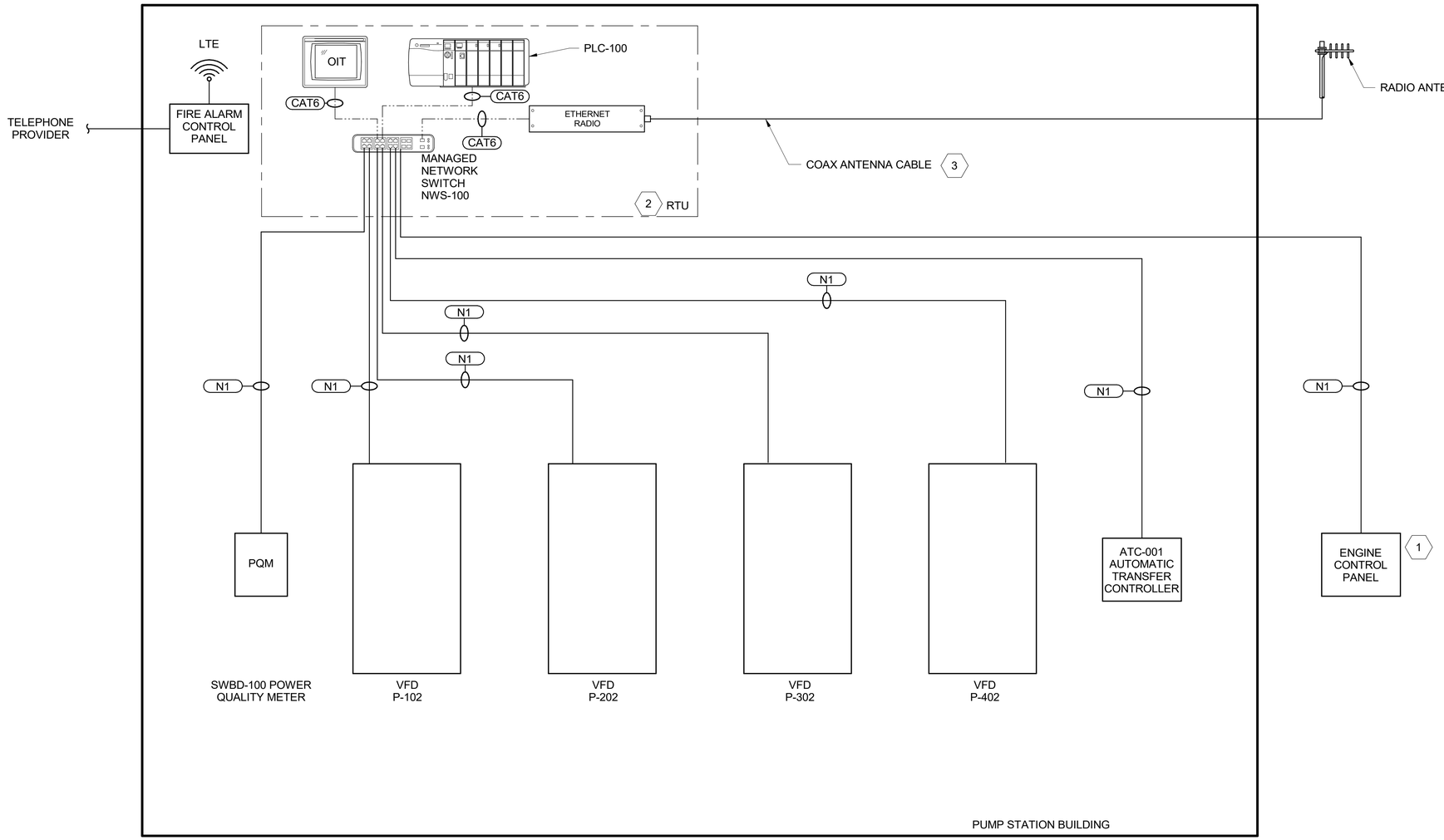

no.	date	by	ckd	description
0	02/12/26	AMM	MAH	ISSUED FOR BID

PROFESSIONAL ENGINEER
MARK A. HOPKINS
19652
DATE: 02/12/2026
WYOMING

BURNS McDONNELL
9191 S. JAMAICA STREET
ENGLEWOOD, CO 80112
Burns & McDonnell Engineering Co, Inc

Issue date FEBUARY 2026	**detailed by** A.BENSON
designed by A. MORRONI	**checked by** M. HOPKINS

SUNRISE ENGINEERING

CROSSROADS PUMP STATION
ELECTRICAL
NETWORK ARCHITECTURE

project 124784	**contract**

drawing 00E-400 — **rev.** 0

sheet 61 **of** 99 **sheets**

Scale For Microfilming: Millimeters / Inches

2/12/2026 1:33:25 PM

Autodesk Docs://124784_Crossroads/124784_CROSSROADS_MEP_R24.rvt

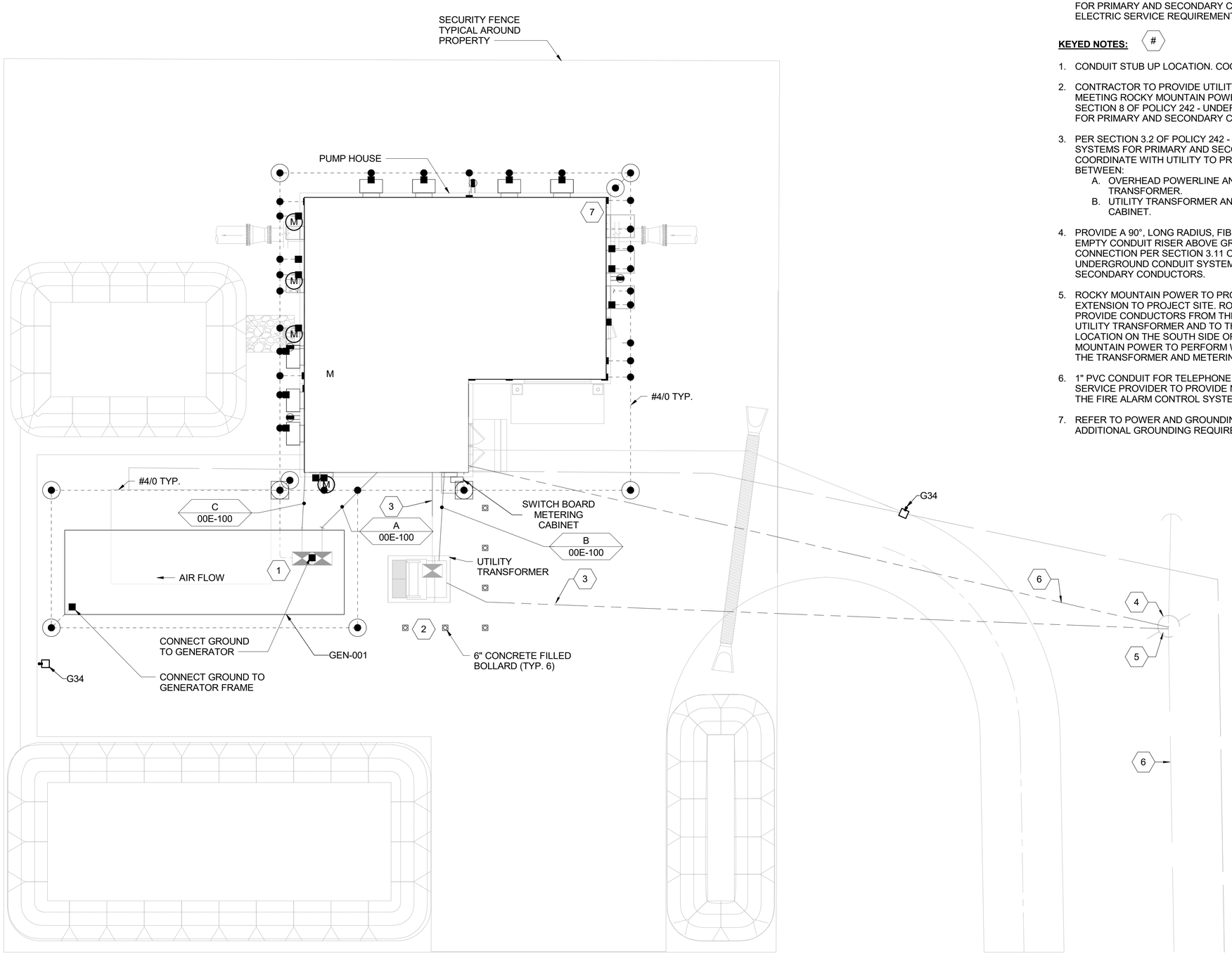

ELECTRICAL SITE PLAN

0 4' 8' 16'
SCALE IN FEET

NORTH

GENERAL NOTES:

1. PERFORM WORK WITH THE UTILITY IN ACCORDANCE WITH ROCKY MOUNTAIN POWER REQUIREMENTS AND PER DOCUMENTS POLICY 242 - UNDERGROUND CONDUIT SYSTEMS FOR PRIMARY AND SECONDARY CONDUCTORS AND THE 2022 ELECTRIC SERVICE REQUIREMENTS MANUAL.

KEYED NOTES: #

1. CONDUIT STUB UP LOCATION. COORDINATE WITH VENDOR.
2. CONTRACTOR TO PROVIDE UTILITY TRANSFORMER VAULT MEETING ROCKY MOUNTAIN POWER REQUIREMENTS. REFER TO SECTION 8 OF POLICY 242 - UNDERGROUND CONDUIT SYSTEMS FOR PRIMARY AND SECONDARY CONDUCTORS.
3. PER SECTION 3.2 OF POLICY 242 - UNDERGROUND CONDUIT SYSTEMS FOR PRIMARY AND SECONDARY CONDUCTORS, COORDINATE WITH UTILITY TO PROVIDE EMPTY CONDUITS BETWEEN:
   A. OVERHEAD POWERLINE AND THE UTILITY TRANSFORMER.
   B. UTILITY TRANSFORMER AND THE SWBD METERING CABINET.
4. PROVIDE A 90°, LONG RADIUS, FIBERGLASS ELBOW TO STUB UP EMPTY CONDUIT RISER ABOVE GROUND FOR UTILITY CONNECTION PER SECTION 3.11 OF POLICY 242 - UNDERGROUND CONDUIT SYSTEMS FOR PRIMARY AND SECONDARY CONDUCTORS.
5. ROCKY MOUNTAIN POWER TO PROVIDE OVERHEAD LINE EXTENSION TO PROJECT SITE. ROCKY MOUNTAIN POWER TO PROVIDE CONDUCTORS FROM THE OVERHEAD LINE TO THE UTILITY TRANSFORMER AND TO THE SWBD METERING CABINET LOCATION ON THE SOUTH SIDE OF THE BUILDING. ROCKY MOUNTAIN POWER TO PERFORM WIRING TERMINATIONS FOR THE TRANSFORMER AND METERING CABINET.
6. 1" PVC CONDUIT FOR TELEPHONE LINE. COORDINATE WITH SERVICE PROVIDER TO PROVIDE NEW LOOP-START SERVICE TO THE FIRE ALARM CONTROL SYSTEM.
7. REFER TO POWER AND GROUNDING DRAWINGS FOR ADDITIONAL GROUNDING REQUIREMENTS.

no.	date	by	ckd	description
0	02/12/26	AMM	MAH	ISSUED FOR BID

PROFESSIONAL ENGINEER
MARK A. HOPKINS
19652
DATE 02/12/2026
WYOMING

BURNS McDONNELL
9191 S. JAMAICA STREET
ENGLEWOOD, CO 80112
Burns & McDonnell Engineering Co, Inc

Issue date FEBUARY 2026	**detailed by** A.BENSON
designed by A. MORRONI	**checked by** M. HOPKINS

SUNRISE ENGINEERING

CROSSROADS PUMP STATION
ELECTRICAL
ELECTRICAL SITE PLAN

project 124784	**contract**
drawing 00ES-100	**rev.** 0

sheet 62 **of** 99 **sheets**

Scale For Microfilming: Millimeters / Inches

2/12/2026 1:33:25 PM

Autodesk Docs://124784_Crossroads/124784_CROSSROADS_MEP_R24.rvt

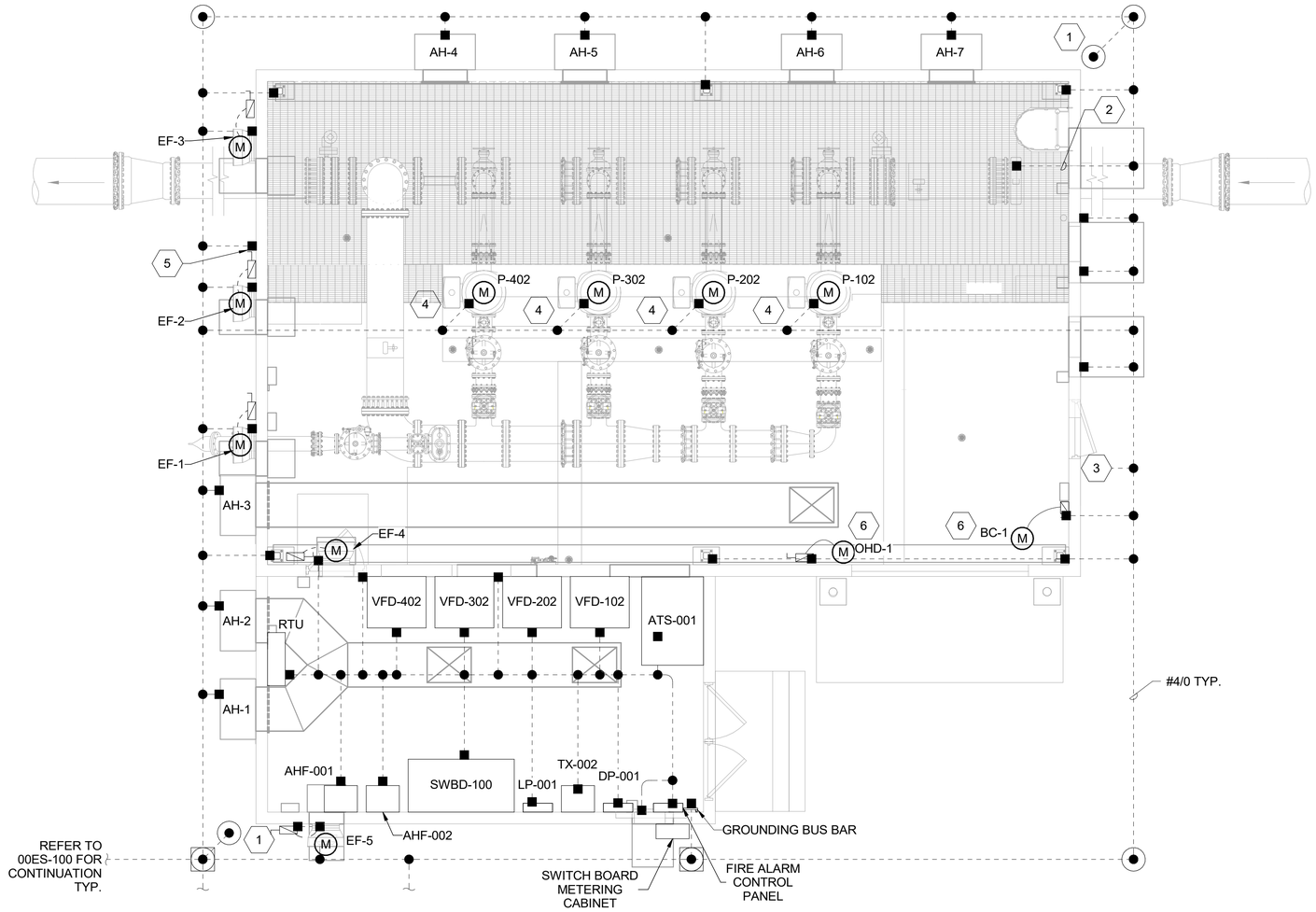

POWER AND GROUNDING PLAN

0 2' 4' 8'
SCALE IN FEET

GENERAL NOTES:

1. ALL HVAC EQUIPMENT (LOUVERS, EXHAUST FANS, AIR HANDLERS, ETC) ARE SUPPLIED BY OTHERS AND ARE SHOWN FOR REFERENCE. REFER TO HVAC DRAWINGS FOR INFORMATION ON DISCONNECTS.
2. REFER TO DWG. 00E-001 FOR GENERAL NOTES, ABBREVIATIONS, AND LEGENDS.
3. REFER TO 00E-003 FOR MATERIAL DESIGNATIONS AND CONDUIT DESCRIPTIONS.
4. REFER TO 00E-110 FOR ONE-LINE DIAGRAM.
5. REFER TO 00E-120 FOR PANELBOARD SCHEDULES.
6. UNLESS REQUIRED BE NEC TO PROVIDE LARGER, PROVIDE #2 AWG GROUND CONNECTION TO:
   A. HANDRAILS CENTERED EVERY 50'
   B. HOISTS, HATCH FRAMES, AND LADDERS
   C. EQUIPMENT RACKS
   D. ELECTRICAL EQUIPMENT
   E. METAL WATER PIPES ENTERING BUILDING.
   F. INSTRUMENTS WHERE REQUIRED FOR PROPER OPERATION.
7. CONTRACTOR TO RUN ALL REQUIRED HVAC POWER AND CONTROLS CONDUITS. COORDINATE WITH HVAC.

KEYED NOTES: (#)

1. CONTRACTOR TO PROVIDE LIGHTNING PROTECTION SYSTEM WITH UL MASTER LABEL. PROVIDE LIGHTNING PROTECTION SYSTEM DOWN CONDUCTOR AT EACH BUILDING CORNER AND EVERY 75' AROUND PERIMETER. CONNECT DOWN CONDUCTOR TO DEDICATED GROUND ROD AND BOND TO ELECTRICAL SYSTEM GROUND RING AT EACH BUILDING CORNER.
2. BOND GROUND TO WATER PIPE IN PIPE TRENCH AND TO REINFORCING STEEL IN CONCRETE - MINIMUM LENGTH 20'.
3. BOND GROUND RING TO REINFORCING STEEL EVERY 50' OF BUILDING PERIMETER.
4. PROVIDE RTD MONITOR PANEL MOUNTED ON EQUIPMENT STAND ADJACENT TO MOTOR TERMINAL BOX.
5. TIE IN ANTENNAE MAST TO THE LIGHTNING PROTECTION SYSTEM.
6. CONTRACTOR TO CONFIRM DISCONNECT SIZE WITH VENDOR.

no.	date	by	ckd	description
0	02/12/26	AMM	MAH	ISSUED FOR BID

PROFESSIONAL ENGINEER MARK A. HOPKINS 19652 DATE: 02/12/2026 WYOMING

BURNS McDONNELL
9191 S. JAMAICA STREET
ENGLEWOOD, CO 80112
Burns & McDonnell Engineering Co, Inc

Issue date	detailed by
FEBUARY 2026	A.BENSON
designed by	**checked by**
A. MORRONI	M. HOPKINS

SUNRISE ENGINEERING

CROSSROADS PUMP STATION
ELECTRICAL
POWER AND GROUNDING PLAN

project	contract
124784	

drawing **01EP-101** — rev. **0**

sheet 63 of 99 sheets

Scale For Microfilming: Millimeters / Inches

2/12/2026 1:33:26 PM

Autodesk Docs://124784_Crossroads/124784_CROSSROADS_MEP_R24.rvt

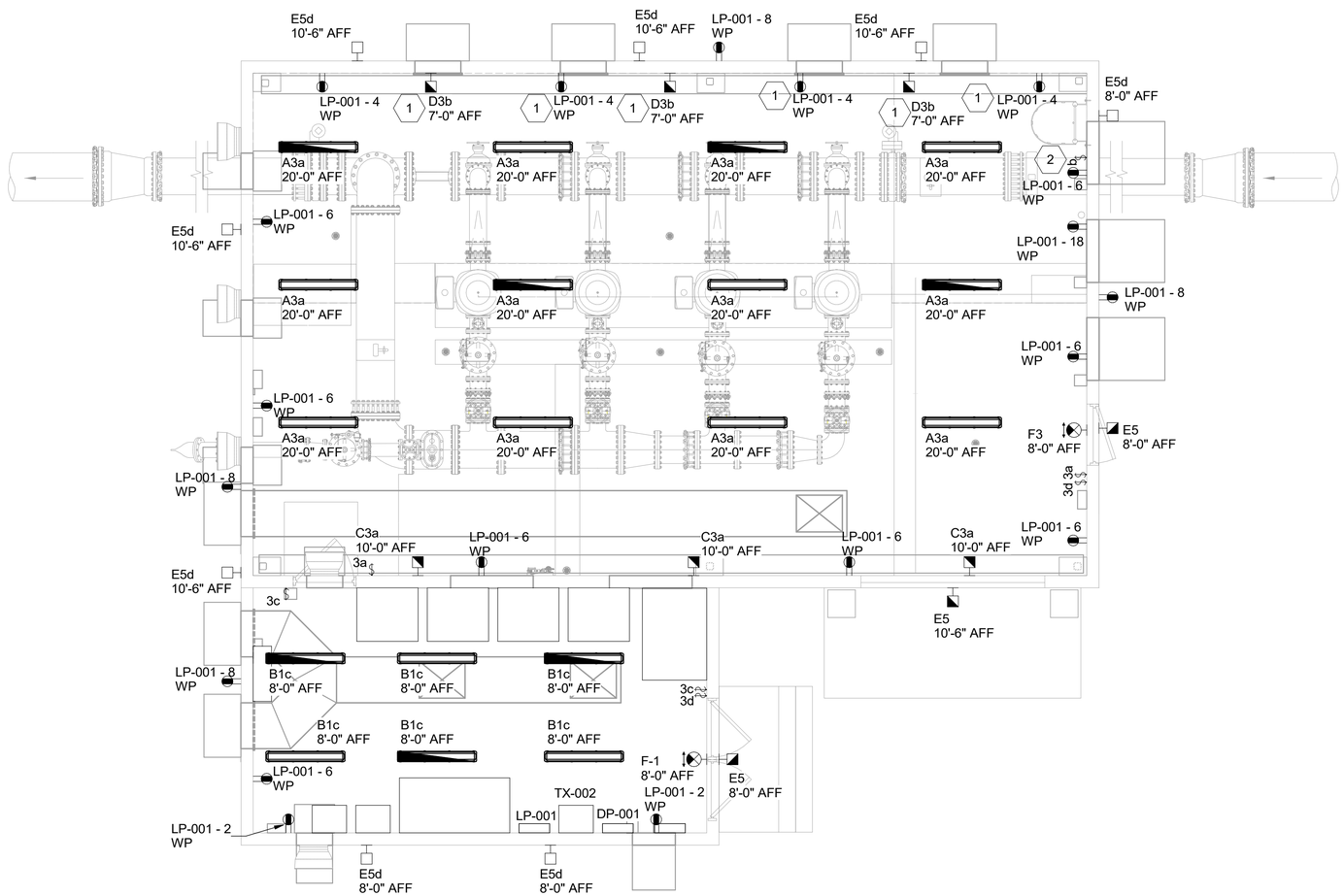

LIGHTING AND RECEPTACLES PLAN

0 2' 4' 8'
SCALE IN FEET

NORTH

GENERAL NOTES:

1. REFER TO DWG. 00E-001 FOR GENERAL NOTES, ABBREVIATIONS, AND LEGENDS.
2. REFER TO 00E-003 FOR MATERIAL DESIGNATIONS AND CONDUIT DESCRIPTIONS.
3. REFER TO 00E-010 FOR LUMINAIRE SCHEDULE.
4. REFER TO 00E-110 FOR ONE-LINE DIAGRAM.
5. REFER TO 00E-120 FOR PANELBOARD SCHEDULES.

KEYED NOTES: (#)

1. LIGHTS AND RECEPTACLES LOCATED IN PIPE GALLERY ARE TO BE UNDER THE GRATING.
2. 48" ABOVE GRATING AT GROUND FLOOR.

no.	date	by	ckd	description
0	02/12/26	AMM	MAH	ISSUED FOR BID

PROFESSIONAL ENGINEER
MARK A. HOPKINS
19652
DATE: 02/12/2026
WYOMING

BURNS McDONNELL
9191 S. JAMAICA STREET
ENGLEWOOD, CO 80112
Burns & McDonnell Engineering Co, Inc

Issue date	detailed by
FEBUARY 2026	A.BENSON
designed by	**checked by**
A. MORRONI	M. HOPKINS

SUNRISE ENGINEERING

CROSSROADS PUMP STATION
ELECTRICAL
LIGHTING AND RECEPTACLES PLAN

project	contract
124784	

drawing **01EL-101** — rev. **0**

sheet 64 of 99 sheets

Scale For Microfilming
Millimeters
Inches

2/12/2026 1:33:27 PM

Autodesk Docs://124784_Crossroads/124784_CROSSROADS_MEP_R24.rvt

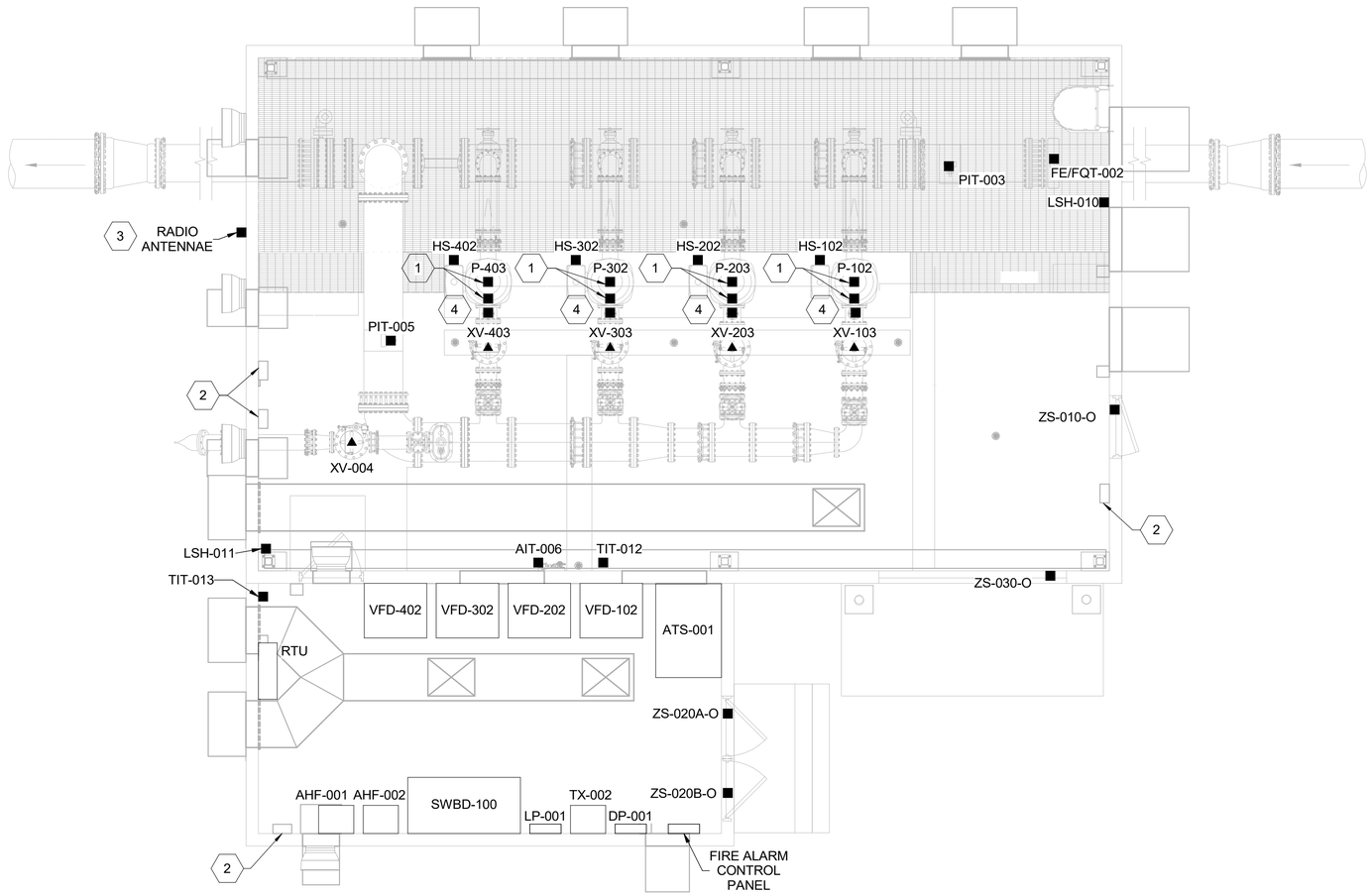

INSTRUMENTATION AND CONTROLS PLAN

0 2' 4' 8'
SCALE IN FEET

NORTH

GENERAL NOTES:

1. REFER TO DWG. 00E-001 FOR GENERAL NOTES, ABBREVIATIONS, AND LEGENDS.
2. REFER TO 00E-003 FOR MATERIAL DESIGNATIONS AND CONDUIT DESCRIPTIONS.
3. REFER TO 00E-110 FOR ONE-LINE DIAGRAM.
4. REFER TO 00E-120 FOR PANELBOARD SCHEDULES.
5. REFER TO 28 31 00. CONTRACTOR TO PROVIDE COMPLETE FIRE ALARM SYSTEM.

KEYED NOTES: #

1. REFER TO P&IDS AND INSTRUMENT LIST FOR REQUIRED MOTOR PROTECTION, RTDS, AND VIBRATION MONITORING.
2. COORDINATE WITH HVAC DRAWINGS FOR HVAC CONTROLS.
3. INSTALL RADIO ANTENNA PER DETAIL FOUND ON 00E-303.
4. PROVIDE RTD MONITOR PANEL MOUNTED ON EQUIPMENT STAND ADJACENT TO MOTOR TERMINAL BOX.

no.	date	by	ckd	description
0	02/12/26	AMM	MAH	ISSUED FOR BID

PROFESSIONAL ENGINEER MARK A HOPKINS 19652 DATE: 02/12/2026 WYOMING

BURNS McDONNELL
9191 S. JAMAICA STREET
ENGLEWOOD, CO 80112
Burns & McDonnell Engineering Co, Inc

Issue date	detailed by
FEBUARY 2026	A.BENSON
designed by	**checked by**
A. MORRONI	M. HOPKINS

SUNRISE ENGINEERING

CROSSROADS PUMP STATION
ELECTRICAL
INSTRUMENTATION AND CONTROLS PLAN

project	contract
124784	

drawing **01EI-101** — rev. **0**

sheet 65 of 99 sheets

Scale For Microfilming
Millimeters
Inches

2/12/2026 1:33:28 PM

Autodesk Docs://124784_Crossroads/124784_CROSSROADS_MEP_R24.rvt

PROCESS SYMBOLS

- GLOBE VALVE
- GATE VALVE
- BUTTERFLY VALVE
- CHECK VALVE
- DUCK BILL CHECK VALVE
- PLUG VALVE
- 3-WAY VALVE
- PRESSURE AND VACUUM RELIEF VALVE
- PRESSURE RELIEF VALVE
- BALL VALVE
- DIAPHRAGM VALVE
- SLIDE GATE
- CORPORATION STOP
- AIR RELEASE VALVE
- AIR RELEASE AND VACUUM VALVE
- BP — BACKFLOW PREVENTER
- DEMISTER
- STOP PLATE
- RUPTURE PLATE
- CALIBRATION COLUMN
- FLOW THROUGH CELL
- BUBBLE TRAP
- FLUME
- WEIR
- DIAPHRAGM SEAL
- ANNULAR SEAL
- DIFFUSER
- EJECTOR/EDUCTOR
- FLEXIBLE HOSE
- EXPANSION ELEMENT (JOINT)
- FLEXIBLE BALL JOINT
- BASKET TYPE STRAINER
- TEE TYPE STRAINER
- Y-TYPE STRAINER
- CONICAL STRAINER
- DUPLEX STRAINER
- PIPE WITH HEAT TRACE CABLE
- REDUCING TEE
- CONCENTRIC REDUCER
- ECCENTRIC REDUCER
- DISCHARGE ELBOW ASSEMBLY
- HOSE CONNECTION
- REMOVABLE PLUG
- REMOVABLE CAP
- WELDED CAP
- BF — BLIND FLANGE
- CO — CLEANOUT
- YH — YARD HYDRANT
- AC — AIR COCK
- WH — WALL HYDRANT
- QUICK DISCONNECT COUPLING
- DRAIN
- PULSATION DAMPENER

MOTOR STARTER SYMBOLS

- VFD — VARIABLE FREQUENCY DRIVE
- FVNR — FULL VOLTAGE - NON-REVERSING
- FVR — FULL VOLTAGE - REVERSING
- RVSS — REDUCED VOLTAGE SOLID-STATE STARTER
- MOTOR

VALVE AND GATE OPERATORS

- S — SOLENOID
- PNEUMATIC
- M M — MOTOR
- DIAPHRAGM
- CHAINWHEEL
- VANE

PROCESS EQUIPMENT

- PERISTALTIC PUMP
- DIAPHRAGM METERING PUMP (XXX)
- CENTRIFUGAL PUMP
- BLOWER
- GRINDER
- ROTARY LOBE PUMP
- SUBMERSIBLE PUMP
- AGITATOR/MIXER
- POSITIVE DISPLACEMENT BLOWER
- PROGRESSIVE CAVITY PUMP
- VERTICAL TURBINE PUMP
- CHEMICAL TOTE
- SCALE
- WETTING CONE
- STRAINER
- SEDIMENTATION BASIN
- AIR RECEIVER TANK
- ULTRAVIOLET DISINFECTION BANK
- COMPRESSOR
- DEWATERING DRUM OR SCREW PRESS
- SCREEN
- SURFACE AERATOR
- MEMBRANE FILTER
- SAFETY SHOWER/ EYE WASH STATION

INSTRUMENTATION SYMBOLS

- LEVEL TRANSMITTER
  WHERE * IS: R = RADAR; U = ULTRASONIC
- GUIDED WAVE RADAR LEVEL TRANSMITTER
- FLOAT SWITCH
- ROTAMETER
- SIGHT FLOW INDICATOR
- AVERAGING PITOT TUBE FLOW ELEMENT
- TURBINE OR PROPELLER TYPE FLOW ELEMENT
- POSITIVE-DISPLACEMENT FLOW METER
- VORTEX FLOW SENSOR
- M — MAGNETIC FLOWMETER
- SONIC FLOWMETER DOPPLER OR TRANSIT TIME
- THERMAL MASS FLOW METER

SELF-ACTUATED REGULATORS AND VALVES

- PRESSURE-REDUCING REGULATOR, SELF-CONTAINED, WITH HANDWHEEL ADJUSTABLE SET POINT
- PRESSURE-REDUCING REGULATOR WITH EXTERNAL PRESSURE TAP
- DIFFERENTIAL-PRESSURE-REDUCING REGULATOR WITH INTERNAL AND EXTERNAL PRESSURE TAP
- BACKPRESSURE REGULATOR, SELF CONTAINED
- BACKPRESSURE REGULATOR WITH EXTERNAL PRESSURE TAP
- PRESSURE-REDUCING REGULATOR WITH INTEGRAL OUTLET PRESSURE RELIEF VALVE AND OPTIONAL PRESSURE INDICATOR

P&IDs LINE TYPES AND EXAMPLES

- DIRECTION OF FLOW
- SIGNAL CONNECTION
- CROSSOVER - NO CONNECTION
- X X — BROKEN SIGNAL LINE WHERE X IS SAME DESTINATION NO.
- I — CONTROL INTERLOCK
- EXTRA LINE OF TEXT
  30 | WWWW-100
  DESCRIPTION OF THE LINE
  — OFF-SHEET REFERENCE, INCLUDING SHEET DESTINATION NO.

no.	date	by	ckd	description
0	09/30/25	AMM	MAH	ISSUED FOR PERMIT

PROFESSIONAL ENGINEER
MARK A. HOPKINS
19652
DATE: 12/05/2025
WYOMING

BURNS McDONNELL
9191 S. JAMAICA STREET
ENGLEWOOD, CO 80112
Burns & McDonnell Engineering Co, Inc

Issue date	detailed by
SEPTEMBER 2025	A.BENSON
designed by	**checked by**
A. MORRONI	M. HOPKINS

SUNRISE ENGINEERING

CROSSROADS PUMP STATION
ELECTRICAL
PROCESS AND INSTRUMENTATION LEGENDS AND ABBREVIATIONS I

project	contract
124784	

drawing **00DI-001** — rev. **0**

sheet 66 of 99 sheets

Scale For Microfilming: Millimeters / Inches

12/2/2025 3:46:00 PM

Autodesk Docs://124784_Crossroads/124784_CROSSROADS_MEP_R24.rvt

TAGGING SCHEME

EQUIPMENT TAG BN-BBB-XYZZ
EXAMPLE TAG WE-LS-3415-H

BN	-	BUILDING NAME
BBBB	-	EQUIPMENT, INSTRUMENT, AND VALVE IDENTIFIERS. ASME AND ISA FUNCTIONAL DESIGNATIONS (ONE TO FOUR LETTERS)
X	-	PROCESS SYSTEM IDENTIFICATION (ONE DIGIT)
Y	-	PROCESS TRAIN IDENTIFICATION (ONE DIGIT)
ZZ	-	LOOP NUMBER - NUMBER TO CORRELATE PRIMARY AND FINAL CONTROL ELEMENTS, CONDUIT AND COMPONENTS. (TWO DIGITS)

AS INDICATED ON THE DRAWINGS FOR INSTRUMENTS, CONTROL DEVICES:

PLANT IDENTIFIERS 'XX' IS NOT SHOWN BUT IMPLIED FOR ALL INSTRUMENT TAGS INDICATED ON THESE DRAWINGS

****	-	OPTIONAL INDICATORS MAY BE INCLUDED TO ADD CLARITY TO THE DRAWINGS.

ADDITIONAL CLARIFIERS

AS	-	ARSENIC
DISC	-	DISCONNECT AUX
ES	-	EMERGENCY STOP
FCL	-	FREE CHLORINE
FLT	-	FAULT
FR*	-	FORWARD / REVERSE
H, HH	-	HIGH, HIGH-HIGH
HOA*	-	HAND / OFF / AUTO
L, LL	-	LOW, LOW-LOW
LOR*	-	LOCAL / OFF / REMOTE (OR LOCAL / STOP / REMOTE)
LP	-	LOOP POWER
MTR	-	MOTOR
ORP	-	OXIDATION REDUCTION POTENTIAL
OSC*	-	OPEN / STOP / CLOSE
pH	-	pH
PMP	-	PUMP
RC	-	RUN CONFIRM
REM	-	REMOTE
SIL	-	SILENCE
SPD	-	SPEED
TCL	-	TOTAL CHLORINE
TURB	-	TURBIDITY

* INDICATORS MAY BE USED INDIVIDUALLY OR IN DIFFERENT COMBINATIONS

VALVE IDENTIFIER (BBB)

ARV	-	AIR RELEASE VALVE
BP	-	BACKFLOW PREVENTER
FCV	-	FLOW CONTROL VALVE
PRV	-	PRESSURE REGULATING VALVE
SG	-	SLIDE GATE
SV	-	SOLENOID VALVE
V	-	VALVE (ALL TYPES)

EQUIPMENT IDENTIFIER (BBBB)

AC	-	AUR COMPRESSOR
B	-	BLOWER
CC	-	CALIBRATION COLUMN
CGD	-	COMBUSTIBLE GAS DETECTOR
CU	-	CONDENSING UNIT
DRY	-	DESICCANT DRYER
EF	-	EXHAUST FAN
F	-	FAN
FCU	-	FAN COIL UNIT
FLC	-	FLOCCULATOR
FLT	-	FILTER OR FAULT
FVNR	-	FULL VOLTAGE REVERSING
FVR	-	FULL VOLTAGE NON-REVERSING
G	-	GENERATOR
HTR	-	HEATER
IPS	-	INCLINED PLATE SETTLERS
LP	-	120VAC PANEL BOARD
LCP	-	LOCAL CONTROL PANEL
LV	-	LOUVER
M	-	MOTOR, ELECTRIC
MAU	-	MAKEUP AIR UNIT
MCC	-	MOTOR CONTROL CENTER
MXR	-	MIXER
P	-	PUMP
PP	-	480VAC PANEL BOARD
PWR	-	POWER
RTU	-	ROOF TOP UNIT
RVSS	-	REDUCED VOLTAGE SOLID-STATE (MOTOR STARTER)
SF	-	SUPPLY FAN
SC	-	SLUDGE COLLECTOR
SED	-	PLATE SETTLER
SKD	-	SKID EQUIPMENT
SWB	-	SWITCH BOARD
T	-	TANK OR BASIN
TS	-	TOTE SCALE
UH	-	UNIT HEATER
VFD	-	VARIABLE FREQUENCY DRIVE
XFMR	-	TRANSFORMER

INSTRUMENT IDENTIFIER (BBBB)

A__	-	ANALYZER
E__	-	VOLTAGE
F__	-	FLOW
H__	-	MANUAL PUSH BUTTON OR SWITCH
I__	-	CURRENT
J__	-	POWER (DIGITAL COMMAND OR OUTPUT)
L__	-	LEVEL
M__	-	MOISTURE
P__	-	PRESSURE
S__	-	SPEED
T__	-	TEMP
V__	-	VIBRATION
W__	-	TORQUE OR WEIGHT
X__	-	MISCELLANEOUS OR COMMON
Y__	-	EVENT
Z__	-	POSITION
_A_	-	ALARM
_B_	-	BUTTON
_C_	-	CONTROL (ANALOG DEMAND)
_D_	-	DIFFERENTIAL
_E_	-	PROBE OR DIRECT MEASUREMENT ELEMENT
_G_	-	GAUGE/GLASS
_I_	-	INDICATOR
_Q_	-	TOTALIZER
_S_	-	SWITCH OR SETPOINT
_T_	-	TRANSMITTER (ANALOG FEEDBACK)
_Y_	-	RELAY (IF DIGITAL) OR CALCULATION (IF ANALOG)
__I	-	INDICATION (ANALOG FEEDBACK)
__T	-	TRANSMITTER (ANALOG FEEDBACK)

INSTRUMENT DEVICE AND FUNCTION SYMBOLS

DISPLAY OR CONTROL	DEVICES (INSTRUMENTS, SELECTOR SWITCHES, ETC.)	PHYSICAL STATUS INDICATION LIGHT MOUNTED ON PANEL	ACCESSABILITY	
*** XXX #### PPPP	*** XXX #### PWR	*** XXX ####	ACCESSIBLE IN FIELD	FIELD MOUNTED (INSTRUMENTS, VALVES, ETC.)
*** XXX #### PPPP	*** XXX #### PWR	*** XXX ####	ACCESSIBLE TO OPERATOR	MAIN CONTROL ROOM (HMI), OR CONTROL PANEL (OIT)
*** XXX #### PPPP	*** XXX #### PWR	*** XXX ####	INSIDE OR BEHIND PANEL DOOR	
*** XXX #### PPPP	*** XXX #### PWR	*** XXX ####	ACCESSIBLE TO OPERATOR	REMOTE/LOCAL CONTROL PANEL (OIT), MOTOR CONTROL CENTER,VFDS, ETC.
*** XXX #### PPPP	*** XXX #### PWR	*** XXX ####	INSIDE OR BEHIND PANEL DOOR	

NOTES:

1. *** - REFER "TAGGING SCHEME" TABLE THIS SHEET
2. HMI AND OIT DISPLAY OR CONTROL, SYSTEM INTEGRATOR (SI) SHALL STORE POINTS INDICATED IN THE HISTORIAN AND MAKE AVAIBLE ACROSS THE SCADA NETWORK AND THROUGH SYSTEM
3. PPPP = PLC SUFFIX NAME

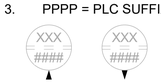

INPUT **OUTPUT**

GENERAL NOTES:

GENERAL NOTES

1. REFER TO THE CONTROL NARRATIVE SPECIFIED IN THE SECTION 40 91 60. FOR PROGRAMMING OF THE EQUIPMENT INDICATED ON THE P&IDS.
2. WHERE USED, PLC XX INDICATES THE CONTROLLER FOR THE HARDWIRE INPUT TO SCADA SYSTEM. XX MAY USE MORE THAN TWO CHARACTERS.
3. PROGRAM COMPLETE TAG NUMBER FOR EACH HARD AND SOFT POINT.

KEY NOTES

KEY NOTES:

1. AN "A" IN THE TAG INDENTIFIER MEANS THE POINT IS PROGRAMMED AS AN ALARM, DISPLAYING ON THE GRAPHICS AND ON THE SYSTEM ALARM SCREENS. ALARM STATE SHALL BE AS DEFINED IN THE I/O LIST.

P&IDs LINETYPES

- PROCESS LINE
- EXISTING PROCESS LINE
- FUTURE PROCESS LINE
- OPEN TROUGH
- EQUIPMENT / MISCELLANEOUS
- ENCLOSURE BOUNDARY
- SKID / VENDOR BOUNDARY
- ELECTRICAL SIGNAL (ANALOG)
- ELECTRICAL SIGNAL (DISCRETE)
- ELECTRICAL SIGNAL (POWER)
- SOFTWARE, DATA LINK, OR BUS
- MANUFACTURER'S CABLE
- PNEUMATIC TUBING

no.	date	by	ckd	description
0	09/30/25	AMM	MAH	ISSUED FOR PERMIT

PROFESSIONAL ENGINEER
MARK A HOPKINS
19652
DATE: 12/05/2025
WYOMING

BURNS McDONNELL
9191 S. JAMAICA STREET
ENGLEWOOD, CO 80112
Burns & McDonnell Engineering Co, Inc

Issue date SEPTEMBER 2025	**detailed by** A.BENSON
designed by A. MORRONI	**checked by** M. HOPKINS

SUNRISE ENGINEERING

CROSSROADS PUMP STATION
ELECTRICAL
PROCESS AND INSTRUMENTATION LEGENDS AND ABBREVIATIONS II

project 124784	**contract**
drawing 00DI-002	**rev.** 0

sheet 67 **of** 99 **sheets**

Scale For Microfilming: Millimeters / Inches

12/2/2025 3:46:00 PM

Autodesk Docs://124784_Crossroads/124784_CROSSROADS_MEP_R24.rvt

GENERAL NOTES:

1. P&IDS SHOW FLOW RIGHT TO LEFT TO MATCH THE FLOW ORIENTATION OF THE PUMP STATION WHEN STANDING ON THE SOUTH SIDE OF THE FACILITY LOOKING NORTH.

KEYED NOTES: #

1. SEE 00E-200 FOR MORE INFORMATION ON THE TRIP OUTPUT OF THE MOTOR RTD MONITOR.

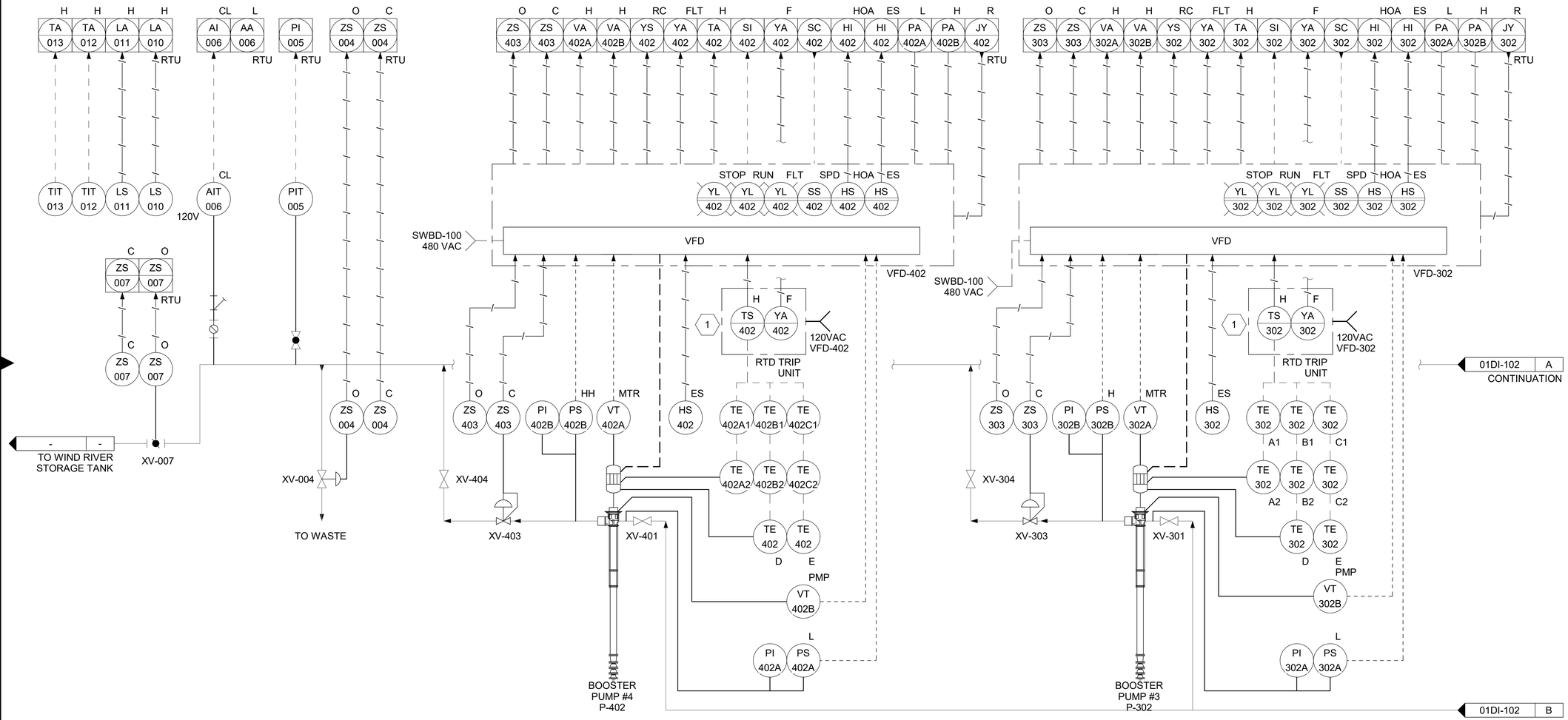

no.	date	by	ckd	description
0	09/30/25	AMM	MAH	ISSUED FOR PERMIT

PROFESSIONAL ENGINEER
MARK A. HOPKINS
19652
DATE: 12/05/2025
WYOMING

BURNS McDONNELL
9191 S. JAMAICA STREET
ENGLEWOOD, CO 80112
Burns & McDonnell Engineering Co, Inc

Issue date	detailed by
SEPTEMBER 2025	A.BENSON
designed by	**checked by**
A. MORRONI	M. HOPKINS

SUNRISE ENGINEERING

CROSSROADS PUMP STATION
ELECTRICAL
BOOSTER PUMP P&ID I

project	contract
124784	

drawing	rev.
01DI-101	0

sheet 68 of 99 sheets

12/2/2025 3:46:00 PM

Autodesk Docs://124784_Crossroads/124784_CROSSROADS_MEP_R24.rvt

GENERAL NOTES:

1. P&IDS SHOW FLOW RIGHT TO LEFT TO MATCH THE FLOW ORIENTATION OF THE PUMP STATION WHEN STANDING ON THE SOUTH SIDE OF THE FACILITY LOOKING NORTH.

KEYED NOTES: (#)

1. SEE 00E-200 FOR MORE INFORMATION ON THE TRIP OUTPUT OF THE MOTOR RTD MONITOR.
2. INSERTION TYPE FLOW METER. REFER TO SPECIFICATION SECTION 40 70 00.

no.	date	by	ckd	description
0	09/30/25	AMM	MAH	ISSUED FOR PERMIT

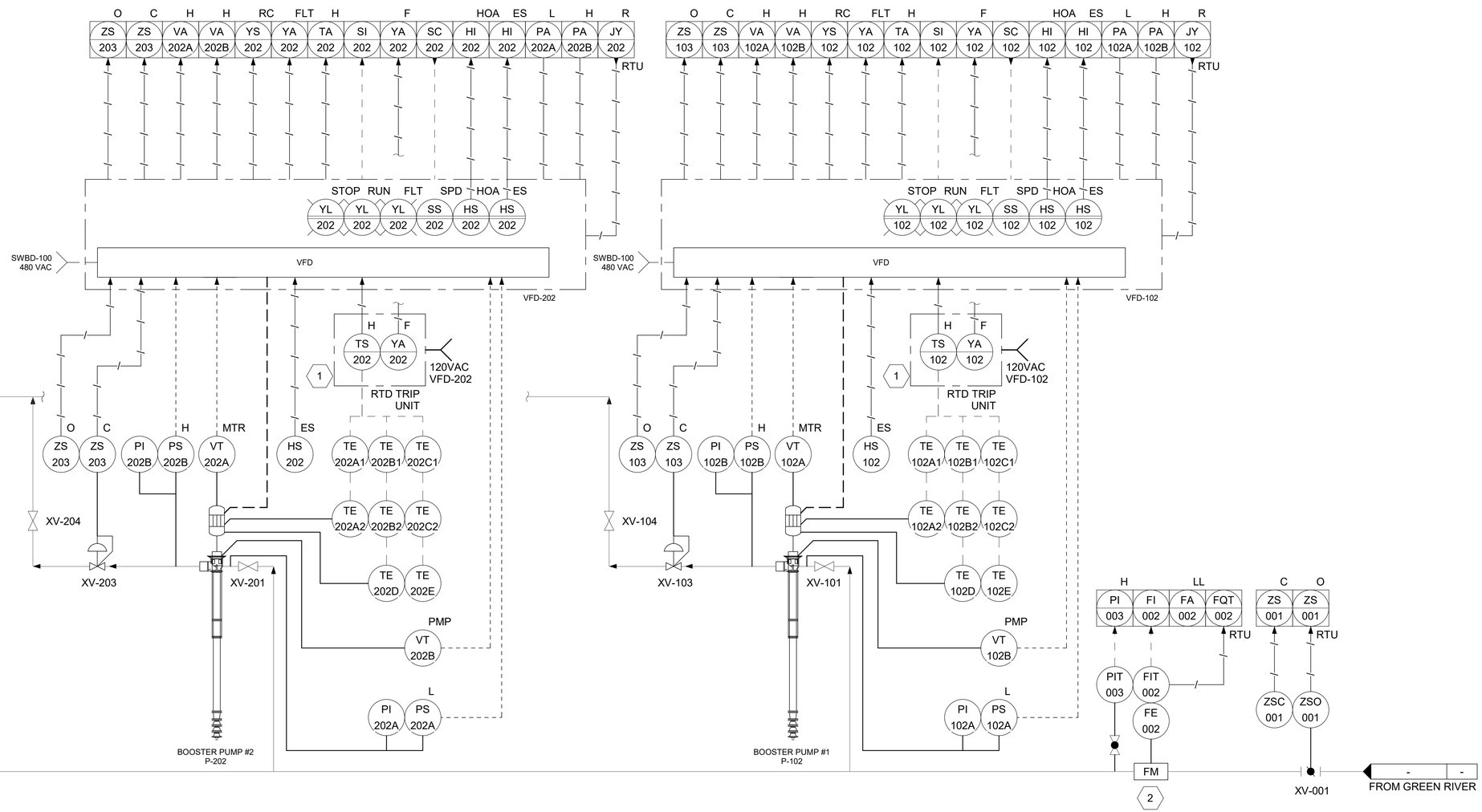

PROFESSIONAL ENGINEER MARK A HOPKINS 19652 DATE: 12/05/2025 WYOMING

BURNS McDONNELL
9191 S. JAMAICA STREET
ENGLEWOOD, CO 80112
Burns & McDonnell Engineering Co, Inc

Issue date	detailed by
SEPTEMBER 2025	A.BENSON
designed by	checked by
A. MORRONI	M. HOPKINS

SUNRISE ENGINEERING

CROSSROADS PUMP STATION
ELECTRICAL
BOOSTER PUMP P&ID II

project 124784 | contract

drawing **01DI-102** — rev. **0**

sheet 69 of 99 sheets

Scale For Microfilming: Millimeters / Inches

12/2/2025 3:46:00 PM

Autodesk Docs://124784_Crossroads/124784_CROSSROADS_MEP_R24.rvt

no.	date	by	ckd	description
0	09/30/25	AMM	MAH	ISSUED FOR PERMIT

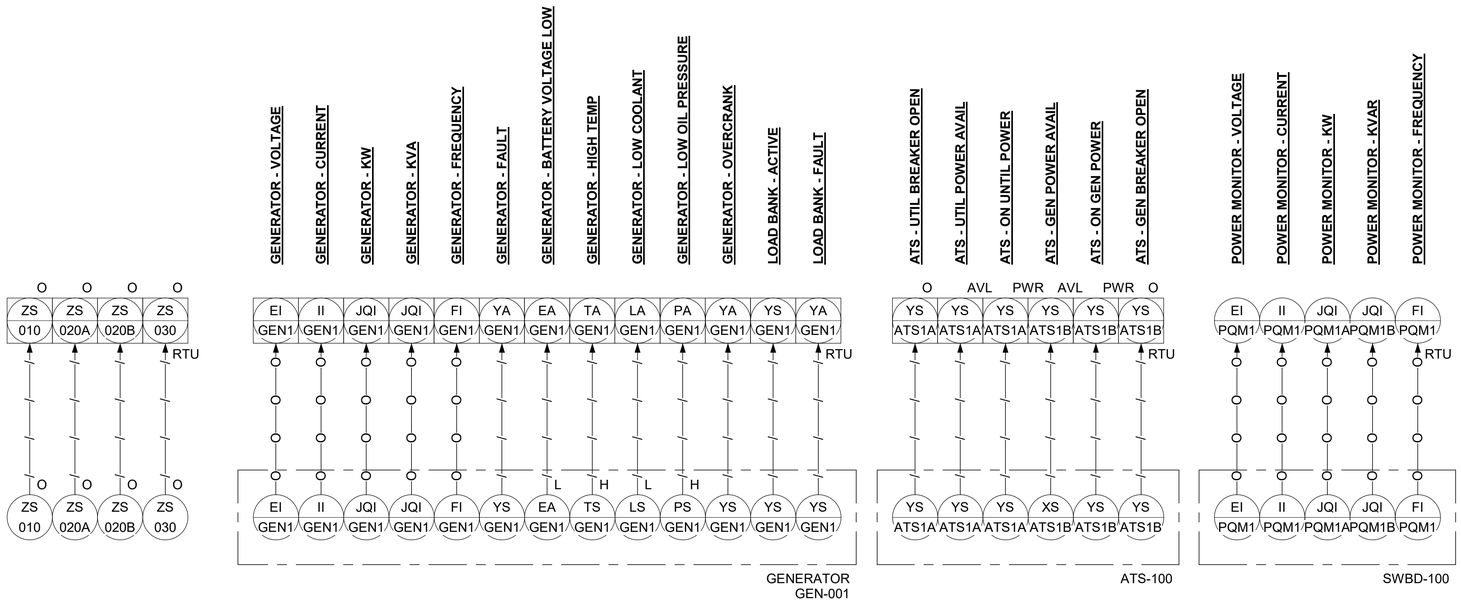

PROFESSIONAL ENGINEER
MARK A HOPKINS
19652
DATE: 12/05/2025
WYOMING

BURNS McDONNELL
9191 S. JAMAICA STREET
ENGLEWOOD, CO 80112
Burns & McDonnell Engineering Co, Inc

Issue date	detailed by
SEPTEMBER 2025	A.BENSON
designed by	checked by
A. MORRONI	M. HOPKINS

SUNRISE ENGINEERING

CROSSROADS PUMP STATION
ELECTRICAL
GENERATOR AND ATS P&ID

project	contract
124784	

drawing **01DI-103** — rev. **0**

sheet 70 of 99 sheets

Scale For Microfilming: Millimeters / Inches

12/2/2025 3:46:00 PM

Autodesk Docs://124784_Crossroads/124784_CROSSROADS_MEP_R24.rvt

LEGEND OF MECHANICAL SYMBOLS AND ABBREVIATIONS

MECHANICAL

- POSITIVE PRESSURE DUCT - RISE
- POSITIVE PRESSURE DUCT - DROP
- NEGATIVE PRESSURE DUCT - RISE
- NEGATIVE PRESSURE DUCT - DROP
- ROUND DUCT - RISE
- ROUND DUCT - DROP
- TURNING VANES
- FRESH AIR LOUVER
- RELIEF AIR OR EXHAUST AIR LOUVER
- FLEXIBLE DUCT CONNECTION
- FLEXIBLE DUCT
- 12/8 — RECTANGULAR DUCT WITH FREE AREA DIMENSIONS SHOWN IN INCHES.
- 12Ø — ROUND DUCT WITH FREE AREA DIMENSIONS SHOWN IN INCHES.
- UP — INCLINED RISE
- DN — INCLINED DROP
  - WITH RESPECT TO AIR FLOW 15° NOMINAL INCLINE WITH RADIUS TURNS=DEPTH OF DUCT.
- W R — R/W=1. ROUND DUCT SIMILAR TO RECTANGULAR
- 12/12 8/8 — RECTANGULAR TO RECTANGULAR OR ROUND TO ROUND DUCT TRANSFORMATION MAXIMUM 15° INCLUDED ANGLE EXCEPT WHERE SHOWN OTHERWISE.
- 12/12 12Ø — RECTANGULAR TO ROUND DUCT TRANSFORMATION
- 12Ø 12/12 — HIGH EFFICIENCY FITTING
- MANUAL VOLUME DAMPER
- ATC OR — ATC DAMPER
- UNIT HEATER

SYMBOLS

- T — THERMOSTAT
- POINT OF CONNECTION
- A M-101 — SECTION TAG - TOP FIGURE IS SECTION NO. BOTTOM FIGURE IS SHEET NO.
- A M101 — DETAIL TAG - TOP FIGURE IS DETAIL NO. BOTTOM FIGURE IS SHEET NO.
- EF 1 — EQUIPMENT IDENTIFICATION
- 1 — KEYED NOTE IDENTIFICATION

NOTE: THE HVAC SYSTEM DESIGN IS BASED ON THE MARVAIR, GREENHECK AND AIR-LITE BRANDS. OTHER ENGINEER APPROVED EQUIVALENTUNITS MAY BE USED PROVIDED THE CONTRACTOR FURNISHES ENGINEERED DESIGN OF THE EQUIVALENT UNITS AND RECEIVES ENGINEER APPROVAL BEFORE BIDDING.

AIR HANDLER SCHEDULE

ID	MANUFACTURER AND MODEL NUMBER	LOCATION	AIR: SUPPLY AIRFLOW (CFM)	AIR: COOLING LOAD (BTU/H)	AIR: HEATING LOAD (KW)	ELECTRICAL: SINGLE POINT VOLT/PH/HZ	ELECTRICAL: MCA	PHYSICAL: CABINET LENGTH/ WIDTH/HEIGHT (IN)	PHYSICAL: WEIGHT (LB)	NOTES
AH-1	MARVAIR AVHA60ACD060CXA5---200	ELECTRICAL RM	1850	54000	6	460/3/60	13.6	23/42/86	540	(1)(2)(3)(4)(8)
AH-2	MARVAIR AVHA60ACD060CXA5---200	ELECTRICAL RM	1850	54000	6	460/3/60	13.6	23/42/86	540	(1)(2)(3)(4)(8)
AH-3	MARVAIR AVHA60ACD090CXA5---200	PUMP RM	1850	54000	9	460/3/60	16.1	23/42/86	540	(1)(2)(3)(5)(6)(8)
AH-4	MARVAIR AVHA60ACD090CXA5---200	PUMP RM	1850	54000	9	460/3/60	16.1	23/42/86	540	(1)(2)(3)(5)(6)(7)
AH-5	MARVAIR AVHA60ACD090CXA5---200	PUMP RM	1850	54000	9	460/3/60	16.1	23/42/86	540	(1)(2)(3)(5)(6)(7)
AH-6	MARVAIR AVHA60ACD090CXA5---200	PUMP RM	1850	54000	9	460/3/60	16.1	23/42/86	540	(1)(2)(3)(5)(6)(7)
AH-7	MARVAIR AVHA60ACD090CXA5---200	PUMP RM	1850	54000	9	460/3/60	16.1	23/42/86	540	(1)(2)(3)(5)(6)(7)

(1) ELEVATION 6250 FT.
(2) UNIT COMPLETE WITH COMMSTAT 3 HVAC CONTROLLER TO CONTROL TWO REDUNDANT UNITS. ONE CONTROLER SHALL CONTROL BOTH UNITS.
(3) DISCONNECT BY MANUFACTURER.
(4) COOLING CONDITIONS: INDOOR 75/63 DB/WB; OUTDOOR 95 DB. HEATING CONDITIONS: INDOOR 65 DB; OUTDOOR -20 DB.
(5) COOLING CONDITIONS: INDOOR 80/63 DB/WB; OUTDOOR 95 DB. HEATING CONDITIONS: INDOOR 65 DB; OUTDOOR -20 DB.
(6) PROVIDE (QTY 1) COMMSTAT 6 HVAC CONTROLLER TO CONTROL FIVE UNITS. THIS UNIT IS ONE OF THE FIVE UNITS.
(7) UNIT COMPLETE WITH FACTORY SUPPLIED SUPPLY AND RETURN AIR GRILLES AND WALL MOUNTING SLEEVES.
(8) UNIT COMPLETE WITH FACTORY SUPPLIED RETURN AIR GRILLE AND WALL MOUNTING SLEEVES.

GRILLES, REGISTERS AND DIFFUSERS

ID	MANUFACTURER	MODEL	SIZE	MAX CFM	MAX NC	DESCRIPTION
CD-1	EH PRICE	AMDA	30/24	2000	30	ALUMINUM DOUBLE DEFLECTION SUPPLY GRILLE. LOUVERED FACE DIRECTIONAL DIFFUSER. INDIVIDUALLY ADJUSTABLE VANES WITH 2S THROW PATTERN.

LOUVER SCHEDULE

ID	MANUFACTURER AND MODEL NUMBER	SERVICE	MIN. FREE AREA (SQ. FT.)	AIR: MAXIMUM AIRFLOW RATE (CFM)	AIR: STATIC PRESSURE (IN. WATER)	PHYSICAL: WIDTH/ HEIGHT (IN)	NOTES
L-1	AIROLITE K8206E	INLET	5.24	4440	0.1	41/48	(1)(2)(3)
L-2	AIROLITE K8206E	INLET	5.24	4440	0.1	41/48	(1)(2)(3)
L-3	AIROLITE K8206E	INLET	5.24	4440	0.1	41/48	(1)(2)(3)
L-4	AIROLITE K8206E	EXHAUST	5.24	4200	0.1	54/40	(2)(3)
L-5	AIROLITE K8206E	EXHAUST	5.24	4200	0.1	54/40	(2)(3)
L-6	AIROLITE K8206E	INLET	0.98	660	0.1	28/21	(1)(2)(3)

(1) WITH BIRD SCREEN AND 45 DEGREE WEATHER HOOD.
(2) WITH 120V ELECTRIC MOTOR ACTUATOR IN THE SILL.
(3) INTERLOCK LOUVER WITH THE EXHAUST FAN. FULL OPEN WHEN EXHAUST FAN IS ON.

FAN SCHEDULE

ID	MANUFACTURER AND MODEL NUMBER	LOCATION	TYPE	AIR TYPE	AIR: MAXIMUM AIRFLOW RATE (CFM)	AIR: STATIC PRESSURE (IN. WATER)	FAN: FAN SPEED (RPM)	FAN: STATIC EFFICIENCY (%)	ELECTRICAL: MOTOR SIZE (HP)	ELECTRICAL: MOTOR BHP (HP)	ELECTRICAL: MOTOR SPEED (RPM)	ELECTRICAL: VOLT/PH/HZ	PHYSICAL: LENGTH/ WIDTH/ HEIGHT (IN)	PHYSICAL: WEIGHT (LBS)	NOTES
EF-1	GREENHECK SBE-3H30-7	PUMP ROOM	SIDEWALL	EXHAUST	4,440	0.376	842	46	0.75	0.61	1725	460/3/60	38/44.25/44.25	297	(1)(2)(3)(4)(6)
EF-2	GREENHECK SBE-3H30-7	PUMP ROOM	SIDEWALL	EXHAUST	4,440	0.376	842	46	0.75	0.61	1725	460/3/60	38/44.25/44.25	297	(1)(2)(3)(4)(7)
EF-3	GREENHECK SBE-3H30-7	PUMP ROOM	SIDEWALL	EXHAUST	4,440	0.376	842	46	0.75	0.61	1725	460/3/60	38/44.25/44.25	297	(1)(2)(3)(4)(7)
EF-4	GREENHECK SBCR-30-10	PUMP ROOM	SIDEWALL	SUPPLY	8,400	0.25	1075	33	1	1.07	1725	460/3/60	26/38/38	115	(1)(5)(7)
EF-5	GREENHECK SBE-1H20-4	PUMP ROOM	SIDEWALL	EXHAUST	660	0.25	791	20	0.25	0.15	1725	115/1/60	17.55/26.13/26.13	125	(1)(2)(3)(4)(6)

(1) 6250 FT ELEVATION.
(2) INTERLOCK INTAKE LOUVER DAMPER WITH EXHAUST FAN BY DIV 26.
(3) UNIT COMPLETE WITH WALL HOUSING, MOTOR GUARD, WEATHER HOOD, MOTORIZED BACKDRAFT DAMPER AND BIRD SCREEN.
(4) LOUVER TO FULL OPEN WHEN FAN IS ON.
(5) UNIT COMPLETE WITH FAN GUARD, WALL HOUSING AND MOTOR GUARD.
(6) CONTROLS: PROVIDE AND INSTALL A CONTROL TIMER FOR VENTILATION FANS SEE SEQUENCE OF OPERATION IN THE BUILDING AUTOMATION SYSTEM SECTION OF THE SPECIFICATIONS.
(7) CONTROLS: PROVIDE AND INSTALL A CONTROLLER FOR ECONOMIZING FANS SEE SEQUENCE OF OPERATION IN THE BUILDING AUTOMATION SYSTEM SECTION OF THE SPECIFICATIONS.

REV NO.	COMMENT	DATE
1		09-13-23

Professional Engineer (Mechanical) Kim P. Harris 9087 Date WYOMING

SUNRISE ENGINEERING
47 EAST 4TH AVENUE
AFTON, WYOMING 83110
TEL. 307.885.8500 - FAX 307.885.8501
www.sunrise-eng.com

GR-RS-SWC JPWB

CROSSROADS PUMP STATION

MECHANICAL SYMBOLS LEGEND & SCHEDULES

SEI NO.	DESIGNED	DRAWN	CHECKED	SHEET NO.	
07265	JJ	DB	RV	71 of 99	M1

X:\20000\20376 Crossroads Pump Station\01_Cadd_MEP_Mechanical\20376_M1-.dwg Sep 13, 2023 2:50pm jhall

CODE INFORMATION

A. 2021 IBC, 2021 IRC, 2021 IFGC, 2021 IECC & THE STATE OF WYOMING AMENDMENTS. ALL SYSTEMS SHALL BE IN COMPLIANCE WITH THE ABOVE CODES AS ADOPTED BY THE STATE OF WYOMING.

B. OUTDOOR AIR VENTILATION PROVIDED AND BASED ON WYOMING ADMINISTRATIVE CODE. VENTILATION RATE SHALL BE 12 AIR CHANGES PER HOUR FOR 10 MINUTES AT 30 MINUTE INTERVALS.

C. EQUIPMENT AND APPLIANCES SHALL BE INSTALLED AS REQUIRED BY THE TERMS OF THEIR APPROVAL, IN ACCORDANCE WITH THE CONDITIONS OF THE LISTING, THE MANUFACTURER'S INSTALLATION INSTRUCTIONS, AND MANUFACTURER'S INSTALLATION INSTRUCTIONS SHALL BE AVAILABLE ON THE JOB SITE AT THE TIME OF INSPECTION.

2021 IECC COMPLIANCE NOTES

1. PROVIDE OWNER WITH COMPLETE OPERATION AND MAINTENANCE MANUALS FOR ALL EQUIPMENT AND CONTROLS INSTALLED. DOCUMENTATION MUST INCLUDE EQUIPMENT CAPACITY (INPUT & OUTPUT), REQUIRED MAINTENANCE ACTIONS, CONTROLS, AND CALIBRATION INFORMATION INCLUDING WIRING DIAGRAMS, CONTROL SEQUENCE DESCRIPTIONS, DESIRED OR FIELD-DETERMINED SETPOINTS, AND A COMPLETE NARRATIVE OF HOW EACH SYSTEM IS INTENDED TO OPERATE.

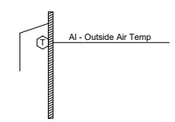

6 / M2 OUTSIDE AIR TEMPERATURE SENSOR
NO SCALE

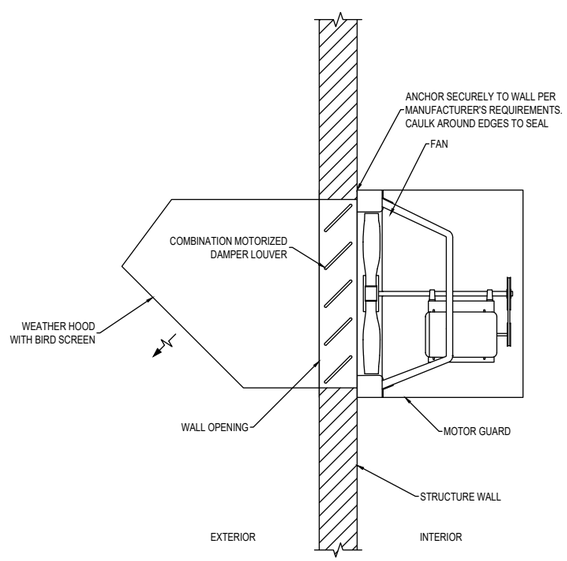

1 / M2 SIDE WALL VENTILATION FAN DETAIL
NO SCALE

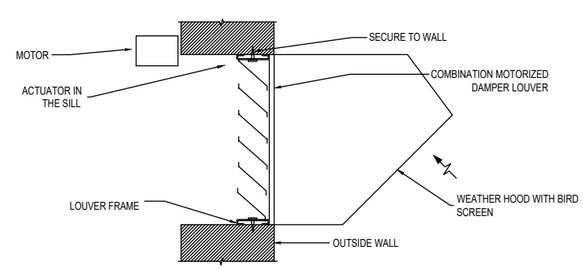

2 / M2 COMBINATION WALL LOUVER SECTION
NO SCALE

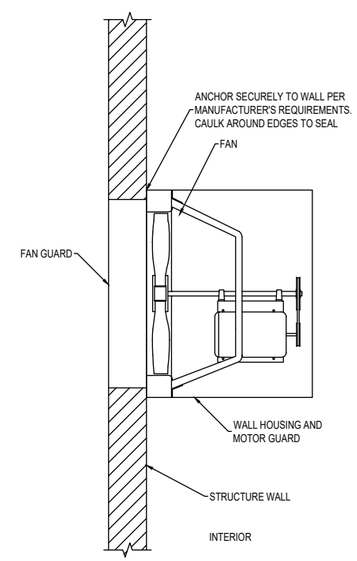

3 / M2 SIDE WALL FAN DETAIL
NO SCALE

REV NO.	COMMENT	DATE
1		09-13-23

Professional Engineer (Mechanical) Kim P. Harris 9087 Date WYOMING

SUNRISE ENGINEERING
47 EAST 4TH AVENUE
AFTON, WYOMING 83110
TEL 307.885.8500 - FAX 307.885.8501
www.sunrise-eng.com

GR-RS-SWC JPWB

CROSSROADS PUMP STATION

MECHANICAL DETAILS

SEI NO.	DESIGNED	DRAWN	CHECKED	SHEET NO.	
07265	JJ	DB	RV	72 of 99	M2

X:\20000\20376 Crossroads Pump Station\01_Cadd_MEP_Mechanical\20376_M1-.dwg Sep 13, 2023 2:50pm jhall

PART 1 – GENERAL

01–230050 HVAC DESIGN CRITERIA

A. WORK INCLUDED: FURNISH ALL LABOR, MATERIALS ,EQUIPMENT, APPLIANCES AND NECESSARY INCIDENTALS FOR THE COMPLETE INSTALLATION OF ALL HEATING AND VENTILATION AS SHOWN ON THE DRAWINGS AND AS SPECIFIED HEREIN.

B. RELATED WORK INCLUDED IN THIS SECTION:

1. FURNISHING ELECTRICAL DEVICES NECESSARY FOR MECHANICAL WORK, EXCEPT DISCONNECTS UNLESS INDICATED OTHERWISE.

2. LINE AND LOW VOLTAGE WIRING FOR MECHANICAL CONTROLS INCLUDING FINAL CONNECTIONS AS INDICATED ON WIRING DIAGRAMS.

3. CONDUIT FOR LINE AND LOW VOLTAGE WIRING FOR MECHANICAL CONTROLS AS INDICATED ON WIRING DIAGRAMS.

4. RESPONSIBILITY FOR OBTAINING CLARIFICATION OF DISCREPANCIES BETWEEN MECHANICAL AND ELECTRICAL WORK FROM ARCHITECT PRIOR TO PROCEEDING WITH THE WORK.

5. RESPONSIBILITY FOR PROPER OPERATION OF AUTOMATIC ELECTRICAL CONTROLS AND EQUIPMENT, AND OF ELECTRIC POWER DRIVEN EQUIPMENT FURNISHED UNDER THIS SECTION.

C. RELATED WORK IN OTHER SECTIONS:

1. ELECTRICAL WORK AS FOLLOWS WILL BE PROVIDED UNDER ELECTRICAL DIVISION:

D. CONDUIT FOR LINE VOLTAGE WIRING FOR EQUIPMENT AND DEVICES AS INDICATED OR SPECIFIED EXCEPT CONDUIT FOR LINE AND LOW VOLTAGE WIRING FOR MECHANICAL CONTROLS AS SPECIFIED UNDER DIVISION 23.

E. LINE VOLTAGE WIRING FOR EQUIPMENT AND DEVICES AS INDICATED OR SPECIFIED HEREIN EXCEPT LINE AND LOW VOLTAGE WIRING FOR MECHANICAL CONTROLS AS SPECIFIED UNDER DIVISION 23.

F. PROVIDING DISCONNECT SWITCHES.

G. INSTALLING ELECTRICAL DEVICES SUCH AS STARTERS AND DISCONNECTS, AND, WHEN INDICATED, FURNISHING ALL SUCH DEVICES.

H. CODES AND STANDARDS:

1. IN ADDITION TO THE REQUIREMENTS OF ALL GOVERNING CODES, ORDINANCES, AND AGENCIES, CONFORM TO THE REQUIREMENTS OF THE FOLLOWING CODES AND STANDARDS:
2021 INTERNATIONAL MECHANICAL CODE.
2021 INTERNATIONAL BUILDING CODE.
2021 INTERNATIONAL PLUMBING CODE.
2021 INTERNATIONAL ENERGY CONSERVATION CODE.
2021 INTERNATIONAL FUEL AND GAS CODE.
ASHRAE 90.1.
2020 INTERNATIONAL ELECTRICAL CODE.

F. DESIGN CONDITIONS

1. OUTSIDE DESIGN CONDITIONS: THE FOLLOWING IS CLIMATE DATE FROM ASHRAE 2017 FUNDAMENTAL HANDBOOK 14 FOR ROCK SPRINGS, WYOMING

a. SUMMER DESIGN DRY BULB TEMP, (ASHRAE 1%), 85°F
b. SUMMER MEAN COINCIDENT WET BULB, (ASHRAE 1%), 54.4°F
c. WINTER DESIGN DRY BULB TEMP, (ASHRAE 99%), 0.8°F
d. EXTREME WINTER DRY BULB TEMP, (ASRAE) –20°F

01–230051 PRODUCT HANDLING

A. PROTECTION: TAKE ALL PRECAUTIONS NECESSARY TO PROTECT THE MATERIALS OF THIS SECTION BEFORE, DURING, AND AFTER INSTALLATION.

B. REPLACEMENTS: IN THE EVENT OF DAMAGE, IMMEDIATELY REPAIR ALL DAMAGED AND DEFECTIVE WORK TO THE APPROVAL OF THE ENGINEER, AT NO ADDITIONAL COST TO THE OWNER.

NOTE: THE HVAC SYSTEM DESIGN IS BASED ON THE MARVAIR, GREENHECK AND AIRLITE BRANDS. OTHER ENGINEER APPROVED EQUIVALENTS UNITS MAY BE USED PROVIDED THE CONTRACTOR FURNISHEDS ENGINEERED DESIGN OR THE EQUIVALENT UNITS AND RECEIVES ENGINEER APPROVAL BEFORE BIDDING.

01–230053 MISCELLANEOUS

A. PERMIT AND FEES: EXAMINATION, APPLY, PAY FOR ALL NECESSARY PERMITS, INSPECTIONS, EXAMINATIONS, AND FEES OR CHARGES REQUIRED BY PUBLIC AUTHORITIES HAVING JURISDICTION.

B. LOCATIONS AND ACCESSIBILITY: CONTRACTOR SHALL FULLY INFORM HIS/HERSELF REGARDING PECULIARITIES AND LIMITATIONS OF SPACE AVAILABLE FOR INSTALLATION OF WORK UNDER THIS SECTION. VALVES, MOTORS, CONTROLS, AND OTHER DEVICES REQUIRING SERVICE, MAINTENANCE, ADJUSTMENT SHALL BE PLACED IN FULLY ACCESSIBLE POSITIONS AND LOCATIONS. PROVIDE ACCESS DOORS WHERE REQUIRED IN DUCTWORK AND/OR CONSTRUCTION WHETHER SPECIALLY DETAILED OR NOT, AND RENDER ALL SUCH DEVICES ACCESSIBLE.

C. SCAFFOLDING: FURNISH ALL SCAFFOLDING, RIGGING, HOISTING AS REQUIRED FOR THE PROPER EXECUTION OF THE WORK.

D. DRAWINGS: DRAWINGS INDICATE DESIRED LOCATION AND ARRANGEMENT OF EQUIPMENT AND OTHER ITEMS, AND ARE TO BE FOLLOWED AS CLOSELY AS POSSIBLE. ALL OFFSETS AND INTERFERENCES MAY NOT BE SHOWN BECAUSE OF THE SCALE OF DRAWINGS. ASSUME THE RESPONSIBILITY FOR COORDINATING THE WORK WITH ALL OTHER TRADES. WORK SPECIFIED AND NOT CLEARLY DEFINED BY THE DRAWINGS SHALL BE INSTALLED AND ARRANGED IN A MANNER SATISFACTORY TO THE ENGINEER. IN THE EVENT CHANGES IN INDICATED LOCATIONS AND ARRANGEMENTS ARE DEEMED NECESSARY BY ENGINEER, THEY SHALL BE MADE BY THIS CONTRACTOR WITHOUT ADDITIONAL CHARGES.

E. ALL HVAC EQUIPMENT SHALL BE LABELED. INFORMATION ON LABELS SHALL INCLUDE: IDENTIFICATION NUMBER AND NAME SAME AS THE DRAWINGS, FLOW AND STATIC PRESSURE, AND THE AREA TO WHICH THE UNIT SERVES. LABELS SHALL BE BLACK FACED FORMICA WITH WHITE ENGRAVED LETTERING AT LEAST 3/16 INCH HIGH.

01–230550 SUBMITTALS AND O&M MANUALS

A. SHOP DRAWINGS: WITHIN 15 DAYS AFTER AWARD OF CONTRACT, AND BEFORE ANY OF THE MATERIALS OF THIS SECTION ARE FABRICATED AND DELIVERED TO THE JOBSITE, THE CONTRACTOR SHALL SUBMIT COMPLETE SHOP DRAWINGS AND EQUIPMENT SUBMITTALS FOR ENGINEER TO REVIEW IN ACCORDANCE WITH THESE SPECIFICATIONS. SHOW ALL DETAILS OF ALL DUCTWORK, AND EQUIPMENT PADS.

B. PRODUCT DATA:

1. SUBMIT ELECTRONIC COPIES OF ALL MANUFACTURER'S PRODUCT DATA SIMULTANEOUSLY WITH ALL SHOP DRAWING SUBMITTALS.

2. PRODUCT DATA TO INCLUDE ALL AIR CONDITIONING EQUIPMENT, HANGERS, FANS, AND OTHER STANDARD ITEMS AS REQUIRED TO COMPLEMENT SHOP DRAWINGS FOR A SUBMITTAL INDICATING PRODUCTS TO BE USED ON THIS WORK.

3. MANUFACTURERS AND SUPPLIERS OF EQUIPMENT SHALL PROVIDE ALL DATA NECESSARY FOR COMPLIANCE WITH THE STATE OF WYOMING ENERGY CONSERVATION STANDARDS. COMPLIANCE CERTIFICATION FOR ALL EQUIPMENT SHALL BE INCLUDED IN EQUIPMENT SUBMITTALS.

C. RECORD DRAWINGS: MAINTAIN THROUGHOUT THE PROGRESS OF THE WORK PROJECT RECORD DRAWINGS AND SUBMIT TO THE OWNER.

D. OPERATION AND MAINTENANCE MANUALS:

1. PROVIDE 1 HARD COPY OF THE O&M MANUALS FOR USE BY OWNER.

2. PROVIDE AN ELECTRONIC FILE OF THE COMPLETE O&M IN PDF FORMAT.

3. PROVIDE BINDERS FOR SIZE 8 – ½ x 11 INCH SHEETS, 2 INCHES TO 3 – ½ INCHES AS REQUIRED BY THE PROJECT. THE FRONT COVER AND BACKBONE SHALL BE LABELED IN WHITE AS FOLLOWS:

OPERATING AND MAINTENANCE MANUAL FOR THE

(INSERT PROJECT NAME)

YEAR

VOLUME NO.()

(INSERT MECHANICAL ENGINEER)
MECHANICAL ENGINEER

(INSERT ARCHITECT)
ARCHITECT

4. PROVIDE AN INDEX SHEET TYPED ON AICO GOLD–LINE INDEXES IN THE FRONT OF THE BINDER. THE MANUAL SHALL INCLUDE THE FOLLOWING.

a. SYSTEM DESCRIPTIONS AND BASIS OF DESIGN
b. START–UP PROCEDURE AND OPERATION OF SYSTEM
c. MAINTENANCE AND LUBRICATION TABLE
d. OPERATION AND MAINTENANCE BULLETINS
e. EQUIPMENT START–UP CERTIFICATES

E. GUARANTEES: IN ADDITION TO EQUIPMENT WARRANTIES, FURNISH A WRITTEN GUARANTEE AGAINST DEFECTS IN MATERIALS AND WORKMANSHIP FOR ONE YEAR. GUARANTEE SHALL INCLUDE REPAIR OF DAMAGE TO, OR REPLACEMENT OF, ANY PART OF EQUIPMENT OR PREMISES CAUSED BY LEAKS OR BREAKS IN PIPE OR EQUIPMENT PROVIDED UNDER THIS SECTION.

01–230553 HVAC EQUIPMENT IDENTIFICATION

EQUIPMENT IDENTIFICATION

1. IDENTIFY ALL MECHANICAL EQUIPMENT AND ALL OTHER DEVICES WITH SIGNS MADE OF LAMINATED PLASTIC WITH ONE–EIGHT INCH (⅛") OR LARGER ENGRAVED LETTERS. ATTACH SIGNS SECURELY WITH RUST PROOF SCREW OR SOME OTHER PERMANENT MEANS (NO ADHESIVES).

2. INCLUDE THE FOLLOWING INFORMATION ON THE EQUIPMENT IDENTIFICATION SIGN: NAME OF EQUIPMENT, IDENTIFICATION ON PLANS AND SCHEDULES, DESIGN CAPACITY, AND ANY OTHER IMPORTANT DATA NO INCLUDED ON FACTORY ATTACHED NAME PLATE.

3. ATTACH SIGNS TO EQUIPMENT SO THEY CAN BE EASILY READ. ATTACH USING SCREW OR RIVETS.

4. A SAMPLE IDENTIFICATION SIGN FOR EQUIPMENT IS AS FOLLOWS:

"SUPPLY FAN –AUDITORIUM F–2
CAPACITY: 49,850 CFM @ 3.5" S.P. (AT 4775 FT. ELEV.)"

"HEATING HOT WATER PUMP
CLASSROOM AREA
156 GPM @ 57 FT.HEAD"

PART 2 – PRODUCTS

02–230529 HANGERS AND SUPPORTS FOR HVAC PIPING AND EQUIPMENT.

A. PROVIDE RUST RESISTANT STEEL HANGERS, SUPPORTS, RODS AND ACCESSORIES.

B. PROVIDE HANGERS TO ACCOMMODATE FULL SIZE INSULATION SYSTEM.

02–233400 HVAC FANS

A. FANS OF SIZE AND CAPACITY SHOWN ON DRAWINGS SHALL BE FURNISHED AND INSTALLED. FANS SHALL BE DIRECT DRIVE OF RPM SHOWN AND SHALL BE COMPLETE WITH FAN HOUSING, INLET GRILLE, AND MOTOR. AIR QUANTITIES SHALL BE CERTIFIED BY AMCA.

B. APPROVED MANUFACTURES ARE:

1. LOREN–COOK
2. GREEN–HECK
3. TWIN–CITY

02–233113 METAL DUCTS

A. PROVIDE DUCTS, PLENUMS, ACCESS DOORS, FRESH AIR INTAKES, AND EXHAUSTS AS INDICATED AND REQUIRED. ALL DUCTWORK SHALL BE CONSTRUCTED, ERECTED, AND TESTED IN ACCORDANCE WITH THE MOST RESTRICTIVE OF LOCAL REGULATIONS, PROCEDURES DETAILED IN THE ASHRAE HANDBOOK OF FUNDAMENTALS, OR THE APPLICABLE STANDARDS ADOPTED BY THE SHEET METAL AND AIR CONDITIONING CONTRACTORS NATIONAL ASSOCIATION. PROVIDE PREFABRICATED SPIRAL LOCKSEAM DUCTS AND FITTINGS AND RECTANGULAR DUCTS OF GALVANIZED STEEL. ALUMINUM FLEXIBLE DUCTWORK OR GYPSUM BOARD DUCTWORK IS NOT ACCEPTABLE.

B. ALL CONNECTIONS TO MAIN DUCTS SHALL BE MADE WITH LOW LOSS FITTINGS.

C. TURNS SHALL BE MADE WITH A THROAT RADIUS OF NO LESS THAN THE DUCT WIDTH.

D. TURNING VAINS SHALL BE INSTALLED IN ALL RECTANGULAR ELBOWS.

02–233300 AIR DUCT ACCESSORIES

A. CONTROL DAMPERS: LOW LEAKAGE, HAT SHAPED 20 GA. GALVANIZED STEEL FRAME, MITERED AND WELDED CORNERS, 6" MAX BLADE WIDTH, PARALLEL BLADE, 20 GA. BLADES. DAMPERS SHALL BE SUBJECT TO COMPLIANCE WITH REQUIREMENTS, PROVIDE PRODUCTS BY ONE OF THE FOLLOWING MANUFACTURERS:
1. GREENHECK
2. POTTORFF
3. RUSKIN
4. YOUNG
5. AIROLITE

6. PROVIDE ACCESS FOR ALL DAMPERS.

REV NO.	COMMENT	DATE
1		09–13–23

Professional Engineer (Mechanical) Kim P. Harris 9087 Date WYOMING

SUNRISE ENGINEERING
47 EAST 4TH AVENUE
AFTON, WYOMING 83110
TEL 307.885.8500 · FAX 307.885.8501
www.sunrise-eng.com

GR–RS–SWC JPWB

CROSSROADS PUMP STATION

MECHANICAL SPECIFICATIONS

SEI NO.	DESIGNED	DRAWN	CHECKED	SHEET NO.	
07265	JJ	DB	RV	73 of 99	M3

X:\20000\20376 Crossroads Pump Station\01_Cadd_MEP_Mechanical\20376_M1-.dwg Sep 13, 2023 2:51pm jhall

2.–233500 HVAC EQUIPMENT

WALL MOUNTED AIR HANDLING UNIT.

UNIT OF SIZE AND CAPACITY INDICATED. UNITS SHALL BE COMPLETELY ASSEMBLED AND TESTED AND READY TO OPERATE. TOTAL UNIT SHALL BE U.L. LISTED AND CARRY A U.L. LABEL.

A. FURNISH AND INSTALL A SELF–CONTAINED WALL MOUNT AIR CONDITIONER SUITABLE FOR OUTDOOR USE. THE UNIT IS TO BE MANUFACTURED BY MARVAIR, DIVISION OF AIRXCEL, INC. THE WALL MOUNT UNIT SHALL BE COMPLETELY FACTORY ASSEMBLED AND TESTED, AND SHALL INCLUDE COMPRESSOR, INDOOR AND OUTDOOR COILS, FANS AND MOTORS AS REQUIRED, PREWIRED CONTROLS, INTERCONNECTING REFRIGERANT TUBING, WIRING, DISCONNECTS, AND OTHER NECESSARY COMPONENTS MOUNTED IN A CORROSION RESISTANT CABINET. UNIT SHALL BE SHIPPED FROM THE FACTORY WITH A FULL OPERATING REFRIGERANT AND OIL CHARGE. ALL FIELD WIRING SHALL BE IN ACCORDANCE WITH THE NATIONAL ELECTRIC CODE AND ALL LOCAL CODES.

B. THE CABINET SHALL BE CONSTRUCTED OF 20 GAUGE ZINC–COATED, GALVANIZED G60 STEEL WITH SATIN BEIGE POLYESTER FINISH. THE FINISH SHALL BE HIGHLY RESISTANT TO ABRASION, METAL MARKING, STAINING, PRESSURE MOTTLING AND REQUIRE MINIMAL MAINTENANCE. THE CABINET SHALL INCLUDE A SLOPED TOP AND BUILT–IN MOUNTING FLANGES. THE CONDITIONED AIR SECTION SHALL BE INSULATED WITH 1/2 INCH, 2 POUND DUAL DENSITY FIBERGLASS.

C. TWO INCH FILAMENT SPUN GLASS TYPE FILTER SHALL BE MOUNTED INTERNALLY, FACTORY SUPPLIED, AND ACCESSIBLE THROUGH AN EXTERNAL PANEL. FILTERS SHALL HAVE A MERV RATING OF 8

D. THE COMPRESSOR SHALL BE A HERMETIC SCROLL TYPE. THE REFRIGERATION CIRCUIT SHALL CONTAIN A LIQUID FILTER DRYER, SUCTION AND LIQUID ACCESS VALVES. THE REFRIGERATION CIRCUIT SHALL INCLUDE A HIGH PRESSURE SWITCH AND A LOW PRESSURE SWITCH WITH A LOCKOUT RELAY. THE COMPRESSOR MOTOR SHALL BE PROTECTED BY AN INTERNAL LINE BREAK THERMOSTAT. ELECTRICAL WIRING CONNECTIONS AT THE COMPRESSOR SHALL BE PROTECTED BY RECEPTACLE HOUSING. REFRIGERANT SHALL BE R–410A.

OUTDOOR SECTION:

8.0 THE CONDENSER COIL SHALL BE CONSTRUCTED OF ALUMINUM PLATE FINS MECHANICALLY BONDED TO SEAMLESS COPPER TUBES. OUTDOOR FAN SHALL BE DIRECT DRIVEN, SLOW SPEED PROPELLER TYPE FOR QUIET OPERATION. THE OUTDOOR MOTOR SHALL BE EQUIPPED WITH A THERMAL PROTECTOR.

INDOOR SECTION

9.0 THE EVAPORATOR COIL SHALL BE CONSTRUCTED OF ALUMINUM PLATE FINS MECHANICALLY BONDED TO SEAMLESS COPPER TUBES. TWO DIRECT DRIVE INDOOR BLOWERS SHALL BE OF CENTRIFUGAL TYPE, FORWARD CURVED. THE INDOOR MOTOR SHALL BE EQUIPPED WITH A THERMAL PROTECTOR.

CONTROL CIRCUIT

10.0 THE INTERNAL CONTROL CIRCUIT SHALL CONSIST OF A CURRENT LIMITING TYPE TRANSFORMER TO GENERATE 24 VAC, SWITCHING DEVICES TO OPERATE THE COMPRESSOR, INDOOR FAN MOTOR, AND ELECTRICAL HEATER(S). THE CONTROL CIRCUIT SHALL INCORPORATE A MANUAL RESET SAFETY CIRCUIT TO RENDER THE REFRIGERANT SYSTEM (COMPRESSOR AND OUTDOOR FAN MOTOR) INOPERATIVE SHOULD THERE BE A HIGH OR LOW REFRIGERANT PRESSURE CONDITION. SYSTEM LOCKOUT CONDITION SHALL BE INDICATED BY CONTACT CLOSURE AVAILABLE AT LOW VOLTAGE TERMINAL BLOCK. THE SAFETY CIRCUIT SHALL BE RESETTABLE AT THE WALL THERMOSTAT. TO PREVENT COMPRESSOR MOTOR OVERHEATING AND TO DELAY START–UP OF COMPRESSOR ON A CALL FOR COOLING, AN AUTOMATIC RESETTING ADJUSTABLE TIME DELAY CIRCUIT SHALL ALSO BE FACTORY INSTALLED. A TIMED LOW PRESSURE BYPASS SWITCH FOR START–UP OF THE AIR CONDITIONER IN COOL AMBIENT TEMPERATURES SHALL BE FACTORY INSTALLED. A HIGH PRESSURE SWITCH (HPS) AND A LOW PRESSURE SWITCH (LPS) SHALL BE FACTORY INSTALLED. COMPAC AIR CONDITIONERS SHALL HAVE A FACTORY INSTALLED ELECTRONIC CIRCUIT BOARD. THE CONTROL BOARD SHALL INCORPORATE THE BLOWER RELAY, THE LOCKOUT RELAY, THE COMPRESSOR TIME DELAY AND THE TIMED LOW PRESSURE BYPASS. THE BOARD SHALL HAVE LED'S TO INDICATE STATUS AND FAULT CONDITIONS TO ASSIST THE SERVICE TECHNICIAN.

10.1 MODES OF OPERATION

NORMAL: UPON A CALL FOR COOLING AND WITH THE HIGH PRESSURE SWITCH (HPS) CLOSED, THE COOLING SYSTEM (COMPRESSOR, INDOOR BLOWER AND OUTDOOR FAN MOTOR) WILL BE ENERGIZED. (NOTE: SEE THE DELAY ON MAKE FEATURE.) THE COOLING SYSTEM WILL REMAIN ENERGIZED DURING THE 3 MINUTE TIMED LOW PRESSURE BY–PASS CYCLE. IF THE LOW PRESSURE SWITCH (LPS) IS OPEN AFTER THE THREE MINUTE BY–PASS, THE COOLING SYSTEM WILL DE–ENERGIZED.

LOCKOUT: IF EITHER OF THE FAULT CONDITIONS (LPS OR HPS) OPENS TWICE DURING THE SAME CALL FOR COOLING, THE CONTROL BOARD ENTERS INTO AND INDICATES THE LOCKOUT MODE. IN THE LOCKOUT MODE, THE COMPRESSOR IS TURNED OFF, THE ALARM OUTPUT IS ENERGIZED AND THE STATUS LED'S WILL BLINK TO INDICATE WHICH FAULT HAS OCCURRED. IF THERE IS A

CALL FOR AIR FLOW, THE INDOOR BLOWER WILL REMAIN ENERGIZED. WHEN THE LOCKOUT CONDITION IS CLEARED, THE UNIT WILL RESET IF THE DEMAND OF THE MARVAIR THERMOSTAT IS REMOVED OR WHEN THE POWER IS RESET. THE COMPAC AIR CONDITIONERS SHALL BE FACTORY WIRED TO BE NORMALLY OPEN. THE USER SHALL BE ABLE TO HAVE NORMALLY CLOSED CONTACTS.

DELAY ON BREAK: IF THE COMPRESSOR IS DE–ENERGIZED DUE TO A LOSS OF A COOLING, OR THE FIRST FAULT, THE UNIT RE–START WILL BE DELAYED 3 MINUTES FROM THE TIME THE CONTACTOR IS DE–ENERGI ED. (NOTE: IIIERE IS NO DELAY ON BREAK IF THE LOCKOUT CONDITION IS RFSET.)

DELAY ON MAKE: ON INIIIAL POWER UP ONLY, IIIE UNIT WILL WAIT 0.0 TO 10 MINUTES FROM THE COOLING CALL BEFORE ALLOWING THE CONIACIOR IO ENERGIZE.

LOW PRESSURE BY–PASS TIME: WHILE RUNNING OR STARTING, THE UNIT WILLS BY–PASS THE LOW PRESSURE SWITCH (LPS) FAULT CONDITION FOR 3 MINUTES BEFORE DE–ENERGIZING THE CONTACTOR.

POST PURGE: UPON A CALL FOR INDOOR AIRFLOW THE BLOWER WILL ENERGIZE IMMEDIATELY. WHEN IN THE COOLING MODE, THE BLOWER WILL REMAIN ENERGIZED FOR 10 TO 90 SECONDS (ADJUSTABLE) AFTER THE COMPRESSOR HAS BEEN DE–ENERGIZED.

WALL MOUNTED AIR HANDLING UNIT (CONTINUED).

ELECTRICAL CONTROL BOX

11.0 THE ELECTRICAL CONTROL BOX SHALL BE LOCATED BEHIND THE FRONT PANEL. THE ELECTRICAL CONTROL BOX, INCLUDING THE LOW VOLTAGE COMPARTMENT, SHALL BE ACCESSIBLE FROM THE FRONT OF THE AIR CONDITIONER. SIDE MOUNTED CONTROL BOXES SHALL NOT BE PERMITTED.

SUPPLY/RETURN GRILLE

12.0 THE SUPPLY GRILLE SHALL BE AN ADJUSTABLE ALUMINUM, DOUBLE DEFLECTION GRILLE, FACTORY PROVIDED. THE RETURN GRILLE SHALL BE AN ALUMINUM GRILLE, FACTORY PROVIDED.

ELECTRICAL DISCONNECT

13.0 THE AIR CONDITIONER SHALL HAVE A FACTORY INSTALLED DISCONNECT(S) ON ALL 60 HZ. MODELS. TO COMPLY WITH THE LATEST U.L. 1995 SAFETY STANDARD, ELECTRIC HEATING ELEMENTS SHALL BE ON A SEPARATE ELECTRICAL CIRCUIT(S).

COMMSTAT 3 CONTROLS

14.0 THE CONTROL OF THE TWO A/C UNITS SHALL BE THE MARVAIR COMMSTAT 3 LEAD LAG CONTROLLER. THE COMMSTAT 3 SHALL BE FACTORY PROGRAMMED WITH STANDARD INDUSTRY SET POINTS, BUT EACH OF THESE SET POINTS SHALL HAVE THE CAPABILITY TO BE CHANGED IN THE FIELD AFTER INSTALLATION. INSTRUCTIONS FOR PROGRAMMING THE CONTROLLER SHALL BE PRINTED ON THE FRONT OF THE CONTROLLER. TEMPERATURE DISPLAY SHALL BE EITHER IN FAHRENHEIT OR CELSIUS. THE LEAD LAG CHANGEOVER SHALL BE ADJUSTABLE FROM ½ DAY TO 7 DAYS IN ½ DAY INCREMENTS TO ENSURE EQUAL RUN TIME ON EACH AIR CONDITIONER. THE CONTROLLER SHALL ALLOW THE LAG UNIT TO ASSIST UPON DEMAND. THE COOLING RANGE SHALL BE ADJUSTABLE FROM 72°F TO 95°F (22°C TO 35°C). THE HEATING RANGE SHALL BE ADJUSTABLE FROM 50°F TO 80°F (10°C TO 27°C). THE ON/OFF DIFFERENTIAL OF EACH STAGE AND THE INTERSTAGE DIFFERENTIAL OF EACH STAGE SHALL BE ADJUSTABLE. THE CONTROLLER SHALL OPERATE ON 24 VAC AND SHALL BE INSENTIVE TO PHASING OF THE AIR CONDITIONERS. THE CONTROLLER SHALL HAVE LED'S TO INDICATE CONTROL POWER FROM EACH AIR CONDITIONER, FUNCTION (HEATING OR COOLING), THE LEAD UNIT AND HIGH OR LOW REFRIGERANT PRESSURE LOCKOUT. A COMFORT BUTTON SHALL BE READILY ACCESSIBLE ON THE FRONT OF THE CONTROLLER TO OVERRIDE THE COOLING AND HEATING SET POINTS FOR 90 MINUTES. THE TEMPERATURE DURING THE 90 MINUTES SHALL BE USER SELECTABLE – EITHER 72° F (22°C) OR 77° F (25° C). IF ONE OF THE AIR CONDITIONERS LOSES POWER, THE CONTROLLER SHALL AUTOMATICALLY ADVANCE THE OTHER UNIT TO LEAD CONTROL. THE CONTROLLER SHALL INDEFINITELY RETAIN ITS SETTINGS ON A POWER LOSS. THE CONTROLLER SHALL HAVE DRY CONTACTS TO PROVIDE REMOTE ALARM OR NOTIFICATION. THE RELAYS SHALL BE EITHER NORMALLY OPEN OR NORMALLY CLOSED. THE CONTROLLER SHALL HAVE ALARM RELAYS FOR: POWER TO INDICATE A LOSS OF POWER TO THE COMMSTAT 3 CONTROLLER, LOW BUILDING TEMPERATURE, HIGH BUILDING TEMPERATURE, REFRIGERANT PRESSURE LOCK OUT AND A SMOKE ALARM OUTPUT. THE CONTROLLER SHALL HAVE AN INPUT FOR A SMOKE DETECTOR (SMOKE DETECTOR PROVIDED BY OTHERS). THE ENCLOSURE OF THE CONTROLLER SHALL BE CONSTRUCTED OF A NON–CORRODING POLYCARBONATE MATERIAL.

DIFFUSERS AND GRILLES. AIR DISTRIBUTION EQUIPMENT SHALL BE OF SIZES AND CAPACITIES INDICATED:

A. REGISTERS, GRILLES, AND DIFFUSERS OF THE SIZES SHOWN ON THE DRAWINGS AND DESCRIBED HEREIN SHALL BE FURNISHED AND INSTALLED. ALL GRILLES, DIFFUSERS, AND REGISTERS SHALL BE COMPLETE WITH FRAMES WITH RUBBER GASKETS SUITABLE FOR THE AREA AND WALL CONSTRUCTION WHERE SHOWN ON THE DRAWINGS.

B. FINISH FOR ALL REGISTERS, DIFFUSERS, GRILLES, ETC., SHALL BE WHITE UNLESS OTHERWISE SELECTED BY THE OWNER. APPROVED MANUFACTURERS FOR ALL AIR DISTRIBUTION PRODUCTS SHALL BE PRICE INDUSTRIES, NAILOR, METAL AIR, TUTTLE & BAILEY, J&J, CARNES, HART AND COOLEY, OR ANEMOSTAT.

NOTE: THE HVAC SYSTEM DESIGN IS BASED ON THE MARVAIR, GREENHECK AND AIRLITE BRANDS. OTHER ENGINEER APPROVED EQUIVALENTS UNITS MAY BE USED PROVIDED THE CONTRACTOR FURNISHEDS ENGINEERED DESIGN OR THE EQUIVALENT UNITS AND RECEIVES ENGINEER APPROVAL BEFORE BIDDING.

PART 3 – EXECUTION

03–230500 COMMON WORK RESULTS FOR HVAC

A. SCHEDULE A REPRESENTATIVE OF THE OWNER TO BE PRESENT WHEN TEST ON HVAC SYSTEMS ARE CONDUCTED.

03–230053 INSTALLATION REQUIREMENTS

A. PROVIDE A MINIMUM CLEARANCE OF 30" OR MORE AT ALL EQUIPMENT. CODE REQUIRED CLEARANCE SHALL TAKE PRECEDENCE.

B. INSTALL ALL EQUIPMENT WITH CLEARANCES TO PERMIT DISASSEMBLY FOR MAINTENANCE PURPOSES.

C. INSTALL ALL SYSTEMS SUCH THAT NO EQUIPMENT, DUCTWORK, CONDUIT, ETC. IS REQUIRED TO BE REMOVED TO SERVICE, REPAIR OR REPLACE EQUIPMENT.

D. SCHEDULE ALL UTILITY SHUTDOWNS 7 DAYS IN ADVANCE.

03–230054 DISCREPANCIES

A. IN THE EVENT OF DISCREPANCY, IMMEDIATELY NOTIFY THE OWNER.

B. DO NOT PROCEED WITH INSTALLATION IN AREAS OF DISCREPANCY UNTIL ALL SUCH DISCREPANCIES HAVE BEEN FULLY RESOLVED. SEE SECTION 2.

03–230055 EQUIPMENT IDENTIFICATION

ALL MAJOR EQUIPMENT SHALL BEAR FIRMLY ATTACHED METAL NAMEPLATES WHICH STATE NAME OF MANUFACTURER, MODEL NUMBER, AND ELECTRICAL DATA.

03–230056 INITIAL LUBRICATION, ADJUSTING, AND FILLING SYSTEMS

BEFORE OPERATING ANY MECHANICAL SYSTEMS, EQUIPMENT BEARINGS SHALL BE LUBRICATED AND BOLTS, PULLEYS, AND OTHER MOVING PARTS CHECKED FOR ALIGNMENT AND TOLERANCES IN ACCORDANCE WITH MANUFACTURER'S OPERATING INSTRUCTIONS. VIBRATIONS AND NOISE SHALL BE SUPPRESSED.

03–230057 CLEANING OF EQUIPMENT, MATERIALS, AND PREMISES

EQUIPMENT WILL BE SMOOTHLY PAINTED AND CLEAN, READY FOR PAINTERS. CLEAN ENTIRE PREMISES OF UNUSED MATERIALS, RUBBISH, DEBRIS, GREASE SPOTS, AND DIRT LEFT BY SUBCONTRACTOR.

03–20058 EQUIPMENT AND MATERIAL

INSTALL PER MANUFACTURER'S RECOMMENDATIONS.

03–230059 ACCESSIBILITY

INSTALL WORK READILY ACCESSIBLE FOR NORMAL OPERATION, READING OF INSTRUMENTS, ADJUSTMENT, SERVICE, INSPECTION,AND REPAIR. PROVIDE ACCESS PANELS WHERE INDICATED AND REQUIRED. ACCESS PANELS SHALL BE THE RESPONSIBILITY OF RESPECTIVE SUBCONTRACTORS.

03–230800 HVAC START–UP AND PERFORMANCE VERIFICATION.

A. THE CONTRACTOR SHALL START–UP AND COMPLETELY VERIFY PERFORMANCE AND OPERATION PRIOR TO NOTIFYING THE ENGINEER OF SUBSTANTIAL COMPLETION.

03–230900 BUILDING AUTOMATION SYSTEM

THE AIR HANDLERS SHALL BE CONTROLLED BY THE FACTORY SUPPLIED COMMSTAT CONTROLS AND SHALL OPERATE BASED ON ONE TEMPERATURE SENSOR LOCATED IN THE ROOM. THE UNIT SHALL MODULATE TO MAINTAIN A MAXIMUM OF 75 DEG F IN COOLING AND A MINIMUM OF 55 DEG F IN HEATING MODE.

THE FANS SHALL BE CONNECTED TO AND CONTROLLED BY A CENTRAL STAND ALONE CONTROLLER THAT IS CAPABLE OF THE FOLLOWING SEQUENCES:

A. THE PUMP ROOM ECONOMIZER FANS SHALL ENERGIZE AND THE ASSOCIATED MOTORIZED DAMPERS SHALL OPEN WHEN THE OUTSIDE AIR TEMPERATURE IS BETWEEN 50 DEGREES F AND 70 DEGREES F AND THE PUMP ROOM AIR TEMPERATURE IS ABOVE 72 DEGREES F. THE PUMP ROOM ECONOMIZER FANS SHALL DE–ENERGIZE AND THE ASSOCIATED MOTORIZED DAMPER SHALL CLOSE WHEN THE OUTSIDE AIR TEMPERATURE IS GREATER THAN 70 DEGREES F OR LESS THAN 50 DEGREES F OR THE PUMP ROOM AIR TEMPERATURE IS BELOW 65 DEGREES F.

B. THE VENTILATION FANS SHALL RUN FOR 10 MINUTES EVERY HALF HOUR.

– END –

REV NO.	COMMENT	DATE
1		09–13–23

Professional Engineer (Mechanical) Kim P. Harris 9087 Date WYOMING

SUNRISE ENGINEERING
47 EAST 4TH AVENUE
AFTON, WYOMING 83110
TEL 307.885.8500 FAX 307.885.8501
www.sunrise-eng.com

GR–RS–SWC JPWB

CROSSROADS PUMP STATION

MECHANICAL SPECIFICATIONS

SEI NO.	DESIGNED	DRAWN	CHECKED	SHEET NO.	
07265	JJ	DB	RV	74 of 99	M4

X:\20000\20376 Crossroads Pump Station\01_Cadd_MEP_Mechanical\20376_M1–dwg Sep 13, 2023 2:51pm jhall

KEYED NOTES

1. AH CONTROL PANEL LOCATION. SEE SPECIFICATIONS.
2. OUTSIDE AIR TEMPERATURE SENSOR. PROVIDE AND INSTALL SUN SHADE.
3. VENTILATION FAN TIMER.
4. ECONOMIZER CONTROL LOCATION.

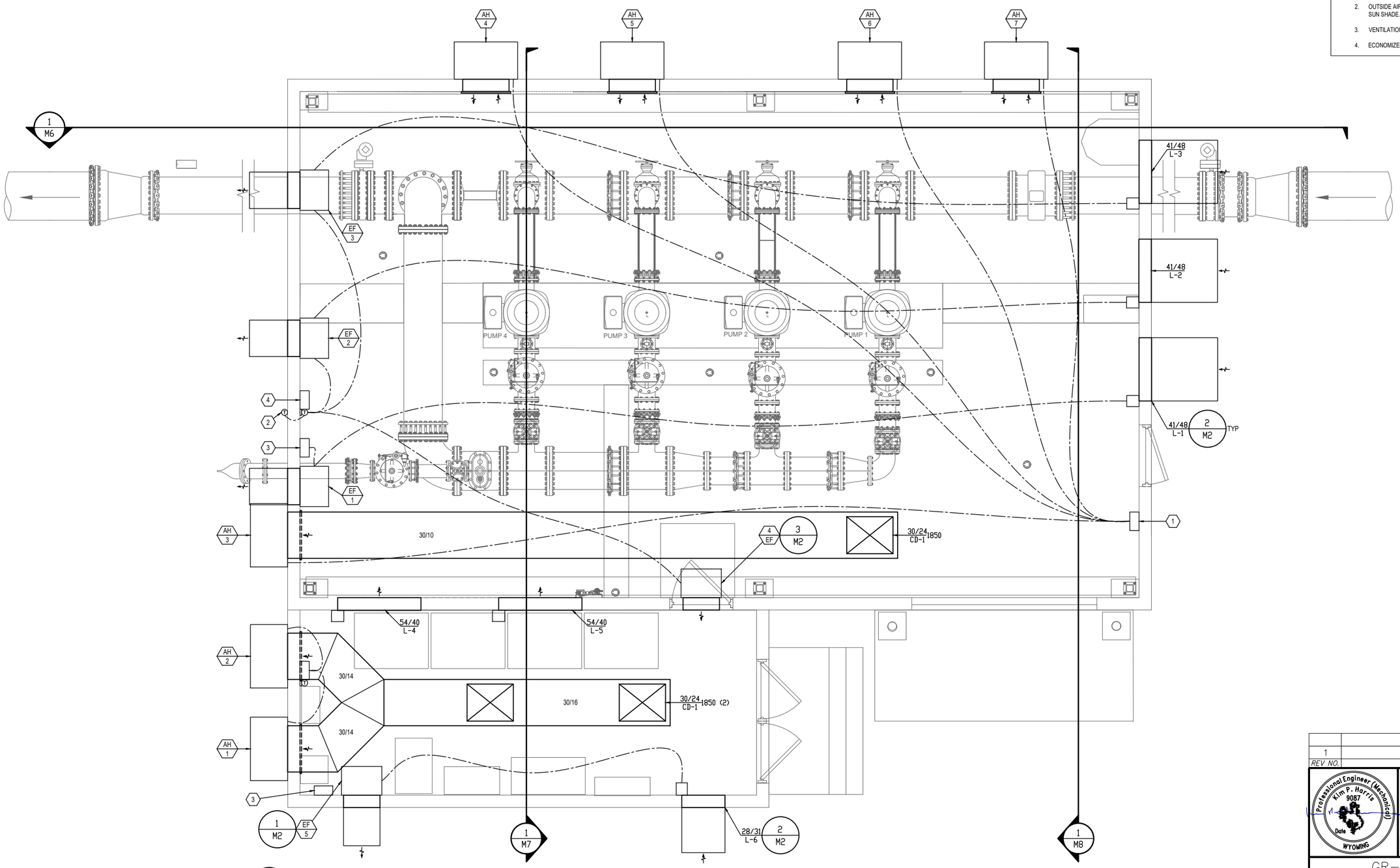

1 M5 MECHANICAL PLAN
3/8" = 1' - 0"

REV NO.	COMMENT	DATE
1		09-13-23

Professional Engineer (Mechanical) Kim P. Harris 9087 Date WYOMING

SUNRISE ENGINEERING
47 EAST 4TH AVENUE
AFTON, WYOMING 83110
TEL 307.885.8500 FAX 307.885.8501
www.sunrise-eng.com

GR-RS-SWC JPWB

CROSSROADS PUMP STATION

MECHANICAL PLAN

SEI NO.	DESIGNED	DRAWN	CHECKED	SHEET NO.	
07265	JJ	DB	RV	75 of 99	M5

X:\20000\20376 Crossroads Pump Station\01_Cadd_MEP_Mechanical\20376_M5-.dwg Sep 13, 2023 2:51pm jhall

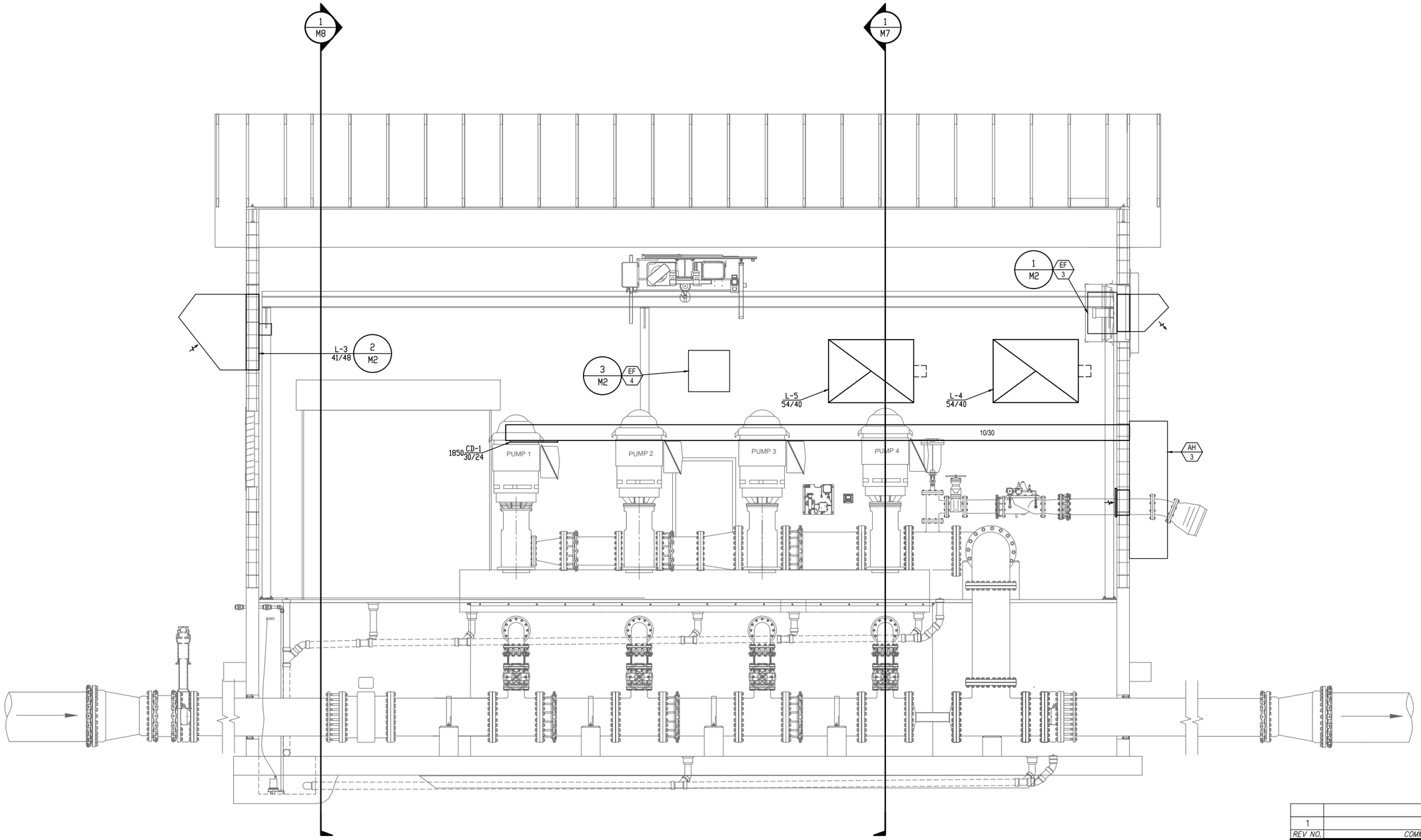

1 / M6 SOUTH MECHANICAL SECTION

3/8" = 1' - 0"

REV NO.	COMMENT	DATE
1		09-13-23

Professional Engineer (Mechanical) Kim P. Harris 9087 Date WYOMING

SUNRISE ENGINEERING
47 EAST 4TH AVENUE
AFTON, WYOMING 83110
TEL 307.885.8500 · FAX 307.885.8501
www.sunrise-eng.com

GR-RS-SWC JPWB

CROSSROADS PUMP STATION

MECHANICAL SECTION

SEI NO.	DESIGNED	DRAWN	CHECKED	SHEET NO.	
07265	JJ	DB	RV	76 of 99	M6

X:\20000\20376 Crossroads Pump Station\01_Cadd_MEP_Mechanical\20376_M5-.dwg Sep 13, 2023 2:51pm jhall

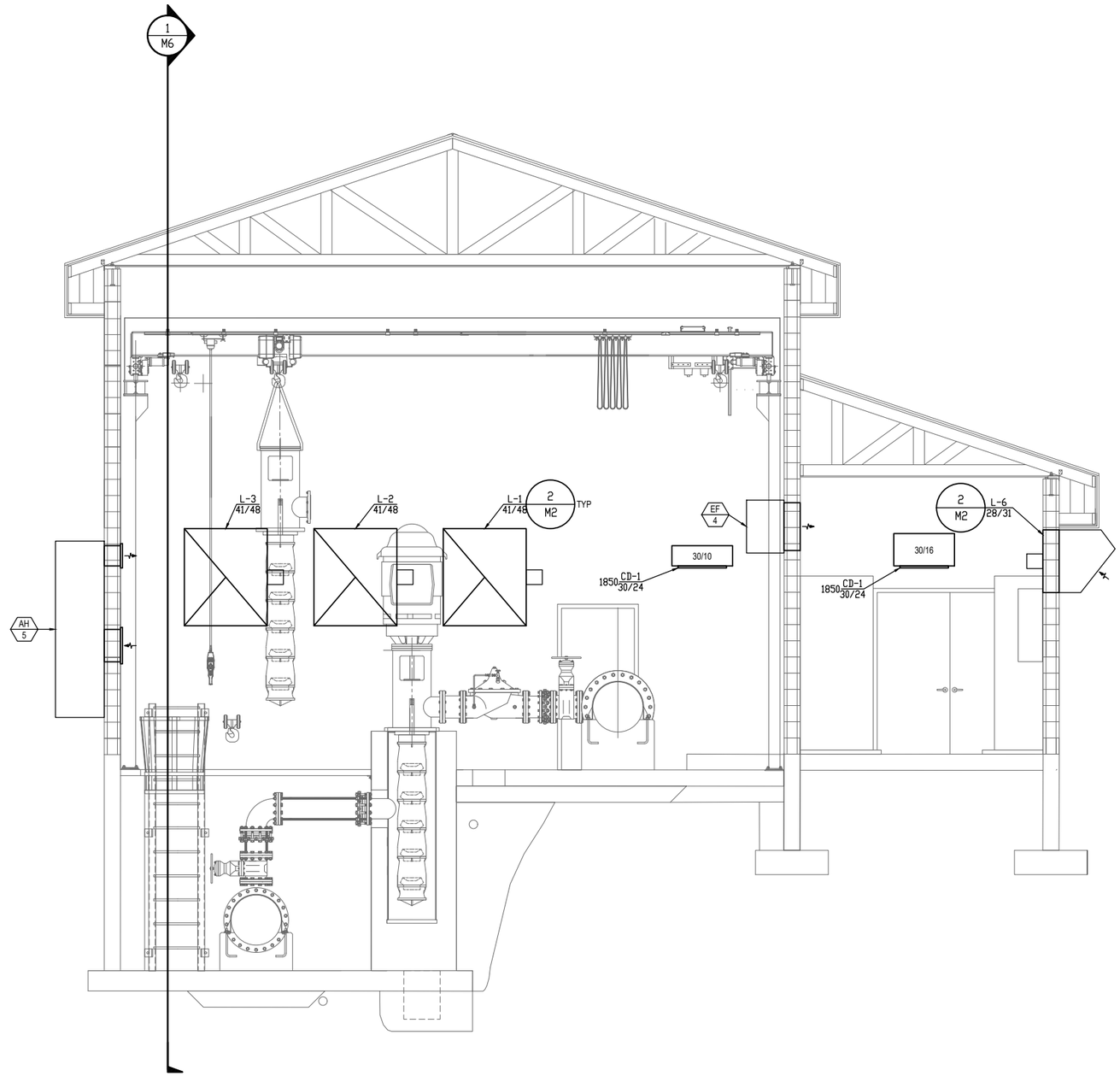

1 / M7 EAST MECHANICAL SECTION

3/8" = 1' – 0"

REV NO.	COMMENT	DATE
1		09-13-23

Professional Engineer (Mechanical) Kim P. Harris 9087 Date WYOMING

SUNRISE ENGINEERING
47 EAST 4TH AVENUE
AFTON, WYOMING 83110
TEL 307.885.8500 · FAX 307.885.8501
www.sunrise-eng.com

GR–RS–SWC JPWB

CROSSROADS PUMP STATION

MECHANICAL SECTION

SEI NO.	DESIGNED	DRAWN	CHECKED	SHEET NO.	
07265	JJ	DB	RV	77 of 99	M7

X:\20000\20376 Crossroads Pump Station\01_Cadd_MEP_Mechanical\20376_M5-.dwg Sep 13, 2023 2:51pm jhall

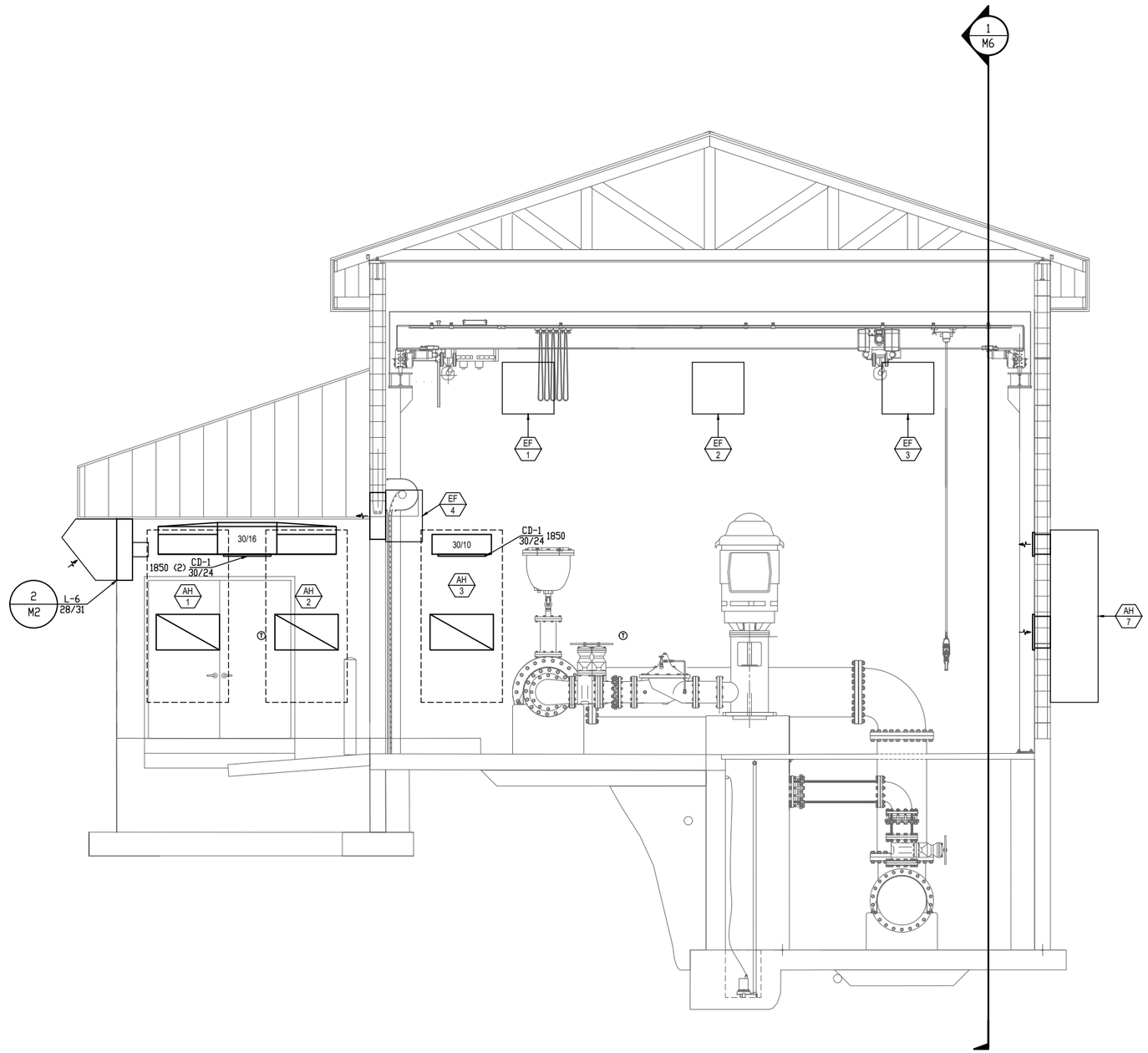

1 / M8 WEST MECHANICAL SECTION

3/8" = 1' - 0"

REV NO.	COMMENT	DATE
1		09-13-23

Professional Engineer (Mechanical)
Kim P. Harris
9087
Date
WYOMING

SUNRISE ENGINEERING
47 EAST 4TH AVENUE
AFTON, WYOMING 83110
TEL 307.885.8500 · FAX 307.885.8501
www.sunrise-eng.com

GR-RS-SWC JPWB

CROSSROADS PUMP STATION

MECHANICAL SECTION

SEI NO.	DESIGNED	DRAWN	CHECKED	SHEET NO.	
07265	JJ	DB	RV	78 of 99	M8

X:\20000\20376 Crossroads Pump Station\01_Cadd_MEP_Mechanical\20376_M5--.dwg Sep 13, 2023 2:51pm jhall

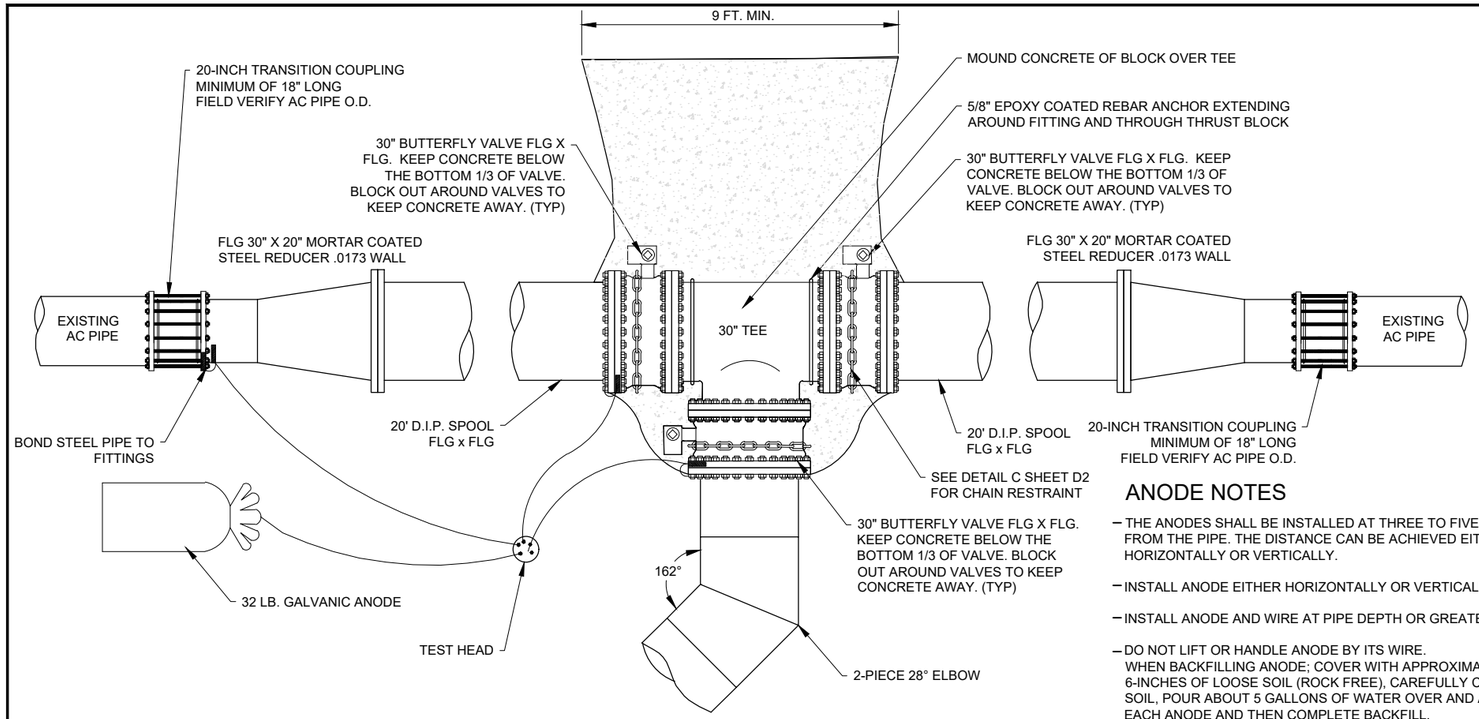

A TIE TO EXISTING 20" AC PIPE
TYPICAL DETAIL

ANODE NOTES

- THE ANODES SHALL BE INSTALLED AT THREE TO FIVE FEET FROM THE PIPE. THE DISTANCE CAN BE ACHIEVED EITHER HORIZONTALLY OR VERTICALLY.
- INSTALL ANODE EITHER HORIZONTALLY OR VERTICALLY.
- INSTALL ANODE AND WIRE AT PIPE DEPTH OR GREATER.
- DO NOT LIFT OR HANDLE ANODE BY ITS WIRE. WHEN BACKFILLING ANODE; COVER WITH APPROXIMATELY 6-INCHES OF LOOSE SOIL (ROCK FREE), CAREFULLY COMPACT SOIL, POUR ABOUT 5 GALLONS OF WATER OVER AND AROUND EACH ANODE AND THEN COMPLETE BACKFILL.

NOTE:
ALL BURIED PIPELINE FITTINGS SHALL RECEIVE A PROTECTIVE TAPE WRAP OF WAX TAPE FOLLOWED BY A "GUARD WRAP" OVER THE WAX TAPE

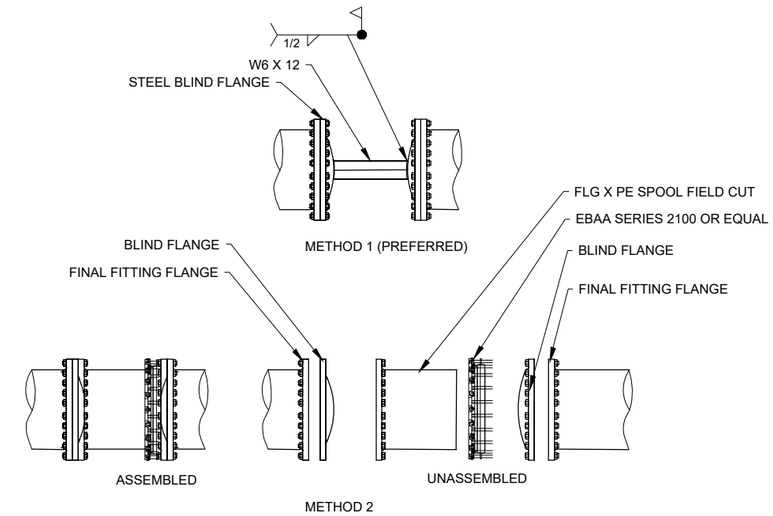

C BLIND FLANGE TO BLIND FLANGE RESTRAINT
TYPICAL DETAIL

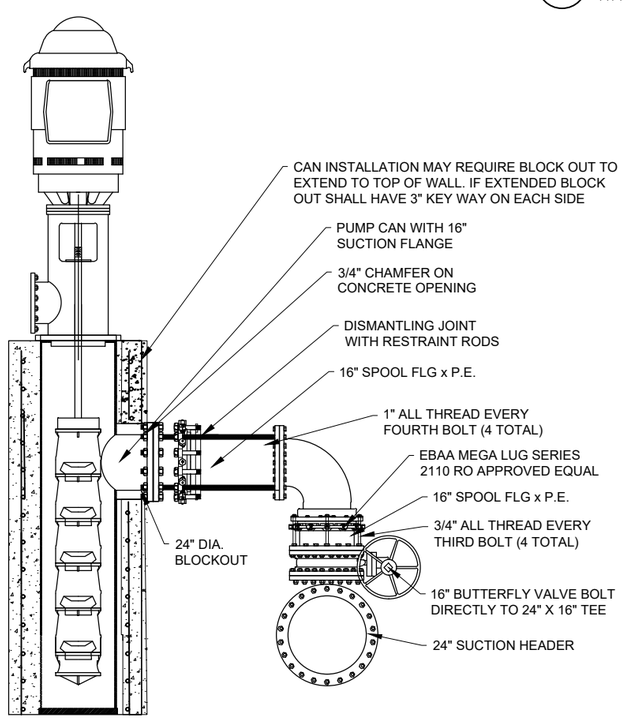

D SUCTION ELBOW RESTRAINT
TYPICAL ELEVATION VIEW

THRUST BLOCK NOTES

-THRUST BLOCK SHALL EXTEND TO PROVIDE 70 SQUARE FEET OF BEARING AREA AGAINST VERTICAL PROJECTION OF TRENCH WALL.

-THRUST BLOCK SHALL EXTEND FULLY UNDER THE 30" TEE WITH A DEPTH OF AT LEAST 12" OVER UNDISTURBED EARTH.

-THRUST BLOCK SHALL EXTEND TO TOP OF TEE BEFORE RISING TO WARD THE TRENCH WALL.

-SIDES OF THRUST BLOCK SHALL BE FORMED TO CREATE VERTICAL SIDES.

-70 SQ. FT. THRUST BLOCK AREA BASED ON 150 PSI. TEST PRESSURE AND 1500 PSF SOIL BEARING CAPACITY. EXTENDS 3 FT. BELOW PIPE AT TRENCH WALL INTO UNDISTURBED SOIL.

-THRUST BLOCK CONCRETE SHALL HAVE A MINIMUM DESIGN COMPRESSIVE STRENGTH OF 2,500 PSI.

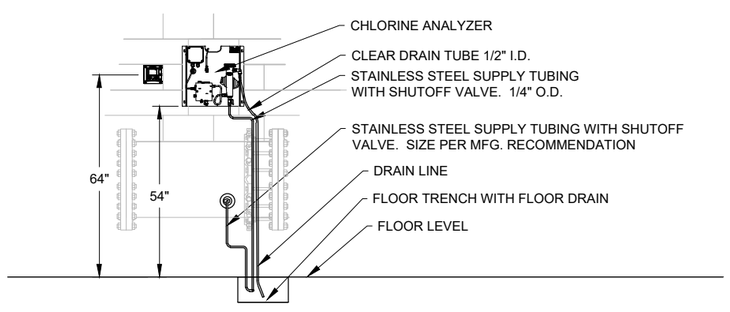

B CHLORINE ANALYZER MOUNT AND PIPING
TYPICAL DETAIL

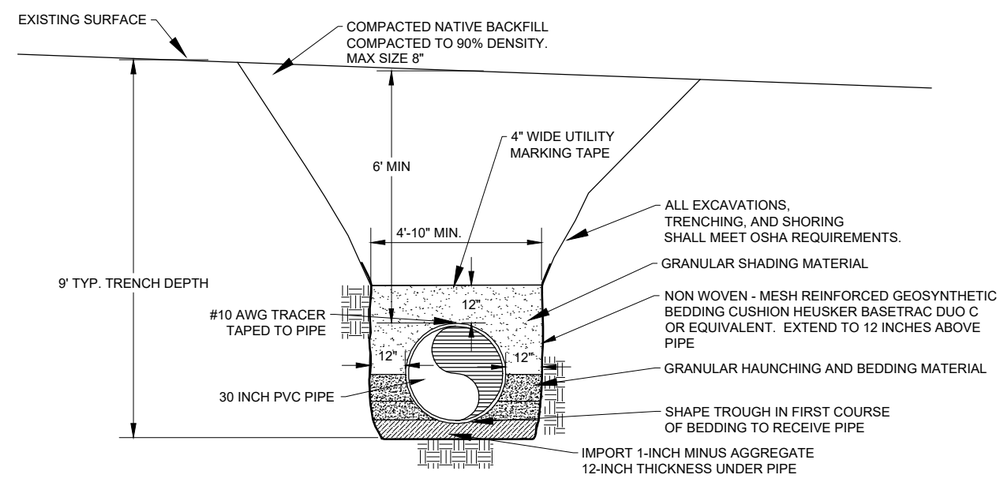

NOTE: THIS DETAIL IS ANTICIPATED TO BE REQUIRED AT THE FOLLWOING LOCATIONS:

STA. 18+50 TO 23+50
STA. 32+00 TO 35+00

E WEAK SOILS CROSSING
TYPICAL SECTION VIEW

REV NO.	COMMENT	DATE

SUNRISE ENGINEERING
770 S WASHINGTON ST.
AFTON, WYOMING 83110
TEL 307.885.8500 · FAX 307.885.8501
www.sunrise-eng.com

GR-RS-SC JPWB
CROSSROADS PUMP STATION
PIPING DETAILS

SEI NO.	DESIGNED	DRAWN	CHECKED	SHEET NO.	
07265	FDK	BJ	JJL	79 of 99	D1

P:\WWDC GR-RS-SC JPWB Cross Roads Pump Station Level III (S07265)\Dwg C3D\Pump Station\Details\Pump Station Layout.dwg Feb 13, 2026 9:40am bjenkins

NOTE:
1. TRENCH DETAIL THREE (3) FEET OUTSIDE OF TRAVELED ROADWAY SURFACES.

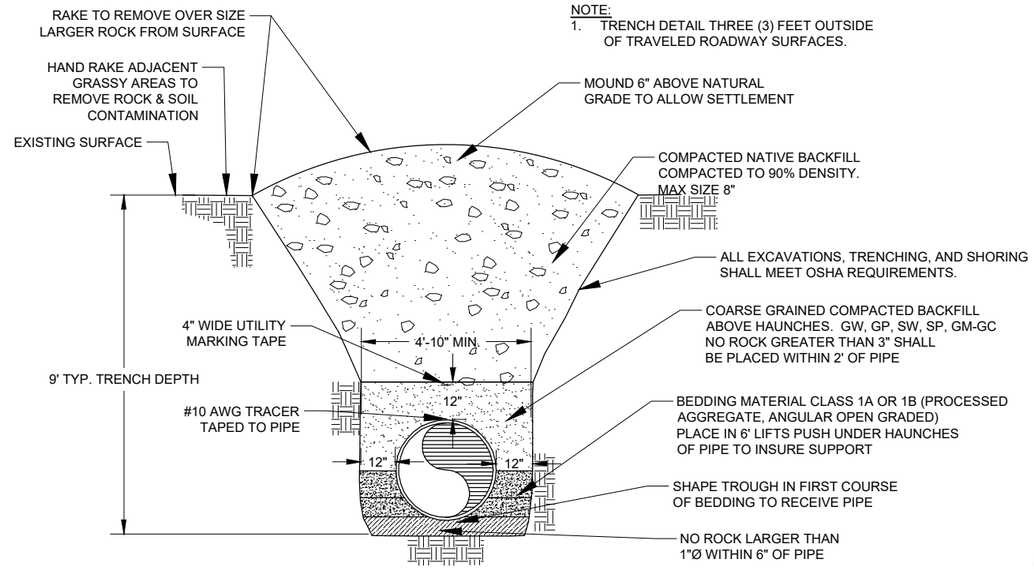

A ~ NON-ROADWAY TRENCH
TYPICAL DETAIL

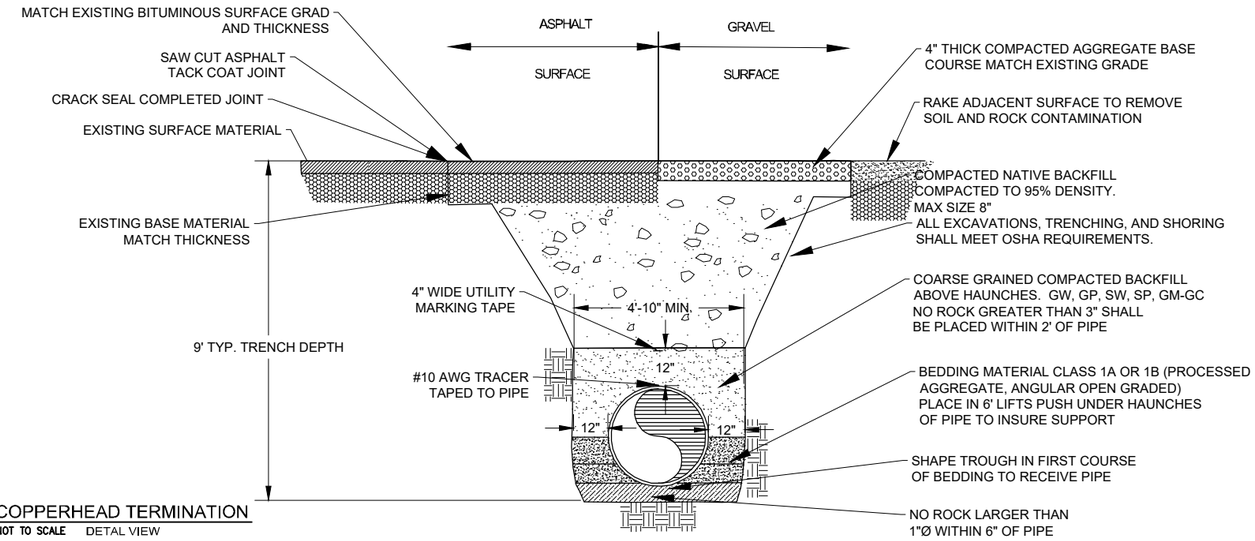

B ~ UNDER ROADWAY TRENCH
TYPICAL DETAIL

H ~ COPPERHEAD TERMINATION
NOT TO SCALE DETAL VIEW

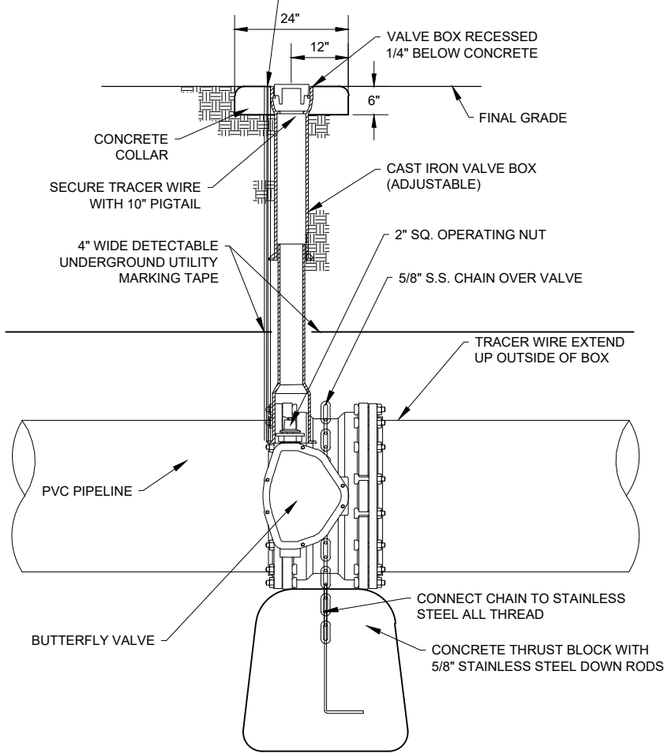

C ~ BUTTERFLY VALVE
TYPICAL DETAIL

NOTE:
1. ALL BOLTS SHALL BE STIANLESS STEEL

G D2 VALVE COLLAR
NOT TO SCALE PLAN VIEW

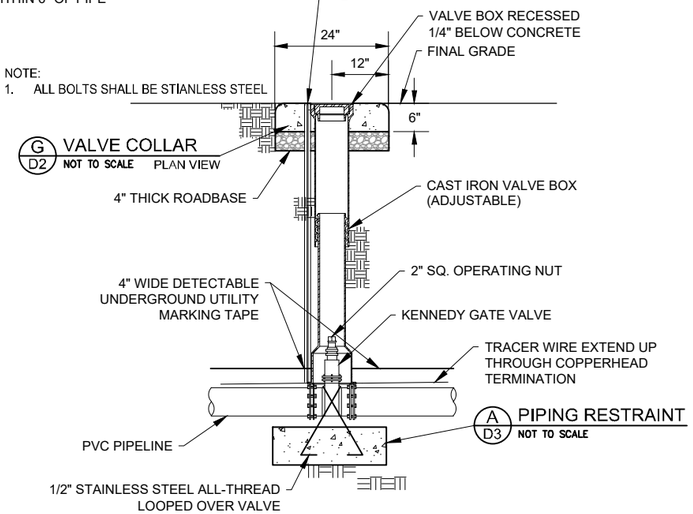

A D3 PIPING RESTRAINT
NOT TO SCALE

D ~ GATE VALVE
NOT TO SCALE

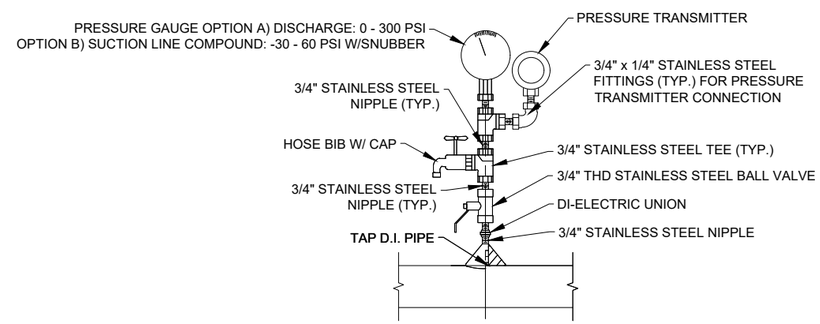

E ~ SAMPLE TAP
TYPICAL DETAIL

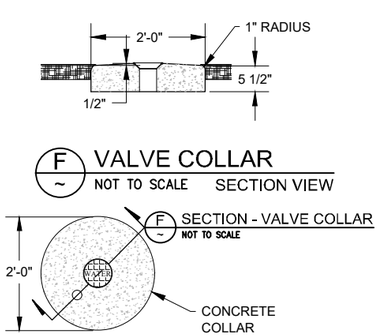

F ~ VALVE COLLAR
NOT TO SCALE SECTION VIEW

F ~ SECTION - VALVE COLLAR
NOT TO SCALE

G ~ VALVE COLLAR
NOT TO SCALE PLAN VIEW

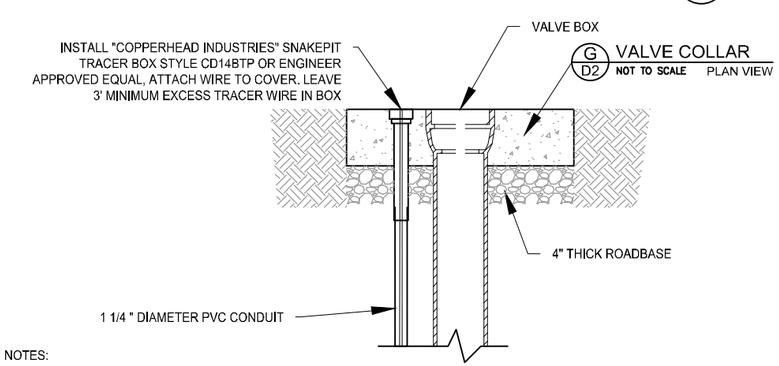

G D2 VALVE COLLAR
NOT TO SCALE PLAN VIEW

NOTES:
1. ALL TRACER WIRE TO BE IN 1-1/4" PVC CONDUIT ABOVE THE PIPE.
2. TRACER WIRE SHALL BE 10 GAUGE COPPER WIRE WITH BLUE INSULATION RATED FOR DIRECT BURIAL. ALL WIRE CONNECTORS SHALL BE 3M DBR DIRECT BURY SPLICE OR CITY APPROVED EQUAL AND SHALL BE WATERTIGHT TO PROVIDE ELECTRICAL CONTINUITY.
3. ALL TRACER WIRE SHALL BE TESTED FOR CONTINUITY IN THE PRESENCE OF A REPRESENTATIVE FROM CITY OF ROCK SPRINGS WATER PRIOR TO ASPHALT PLACEMENT. ANY TRACER WIRE FOUND NOT TO BE CONTINUOUS AFTER TESTING SHALL BE REPAIRED OR REPLACED AT THE CONTRACTOR'S EXPENSE PRIOR TO ASPHALT PLACEMENT.

H ~ COPPERHEAD TERMINATION
NOT TO SCALE DETAL VIEW

REV NO.	COMMENT	DATE

SUNRISE ENGINEERING
770 S WASHINGTON ST.
AFTON, WYOMING 83110
TEL 307.885.8500 · FAX 307.885.8501
www.sunrise-eng.com

GR-RS-SC JPWB

CROSSROADS PUMP STATION

PIPING DETAILS

SEI NO.	DESIGNED	DRAWN	CHECKED	SHEET NO.	
07265	FDK	BJ	JJL	80 of 99	D2

P:\WMDC GR-RS-SC JPWB Cross Roads Pump Station Level III (S07265)\Dwg C3D\Pump Station\Details\Building Details.dwg Feb 13, 2026 9:40am bjenkins

NOTES:

FOR THRUST RESTRAINT, CONTRACTOR SHALL USE EITHER "STARGRIP" AS MANUFACTURED BY STAR PIPE PRODUCTS OR MEGALUG AS MANUFACTURED BY EBAA IRON SALES INC, OR APPROVED EQUAL FOR THE ENTIRE PROJECT.

CONCRETE THRUST RESTRAINT SHALL ONLY BE USED WHEN SPECIFICALLY APPROVED BY THE WATER COMPANY.

CONCRETE THRUST RESTRAINT SHOWN ON THIS SHEET ASSUMES THE FOLLOWING CONDITIONS:
SOIL TYPE: GM - SILTY GRAVEL, GRAVEL-SAND-SILT MIXTURE
BURIAL DEPTH: 4FT.
SAFETY FACTOR: 1.5
TEST PRESSURE: 150 PSI
TRENCH TYPE: PIPE BEDDED IN COMPACTED GRANULAR MATERIAL TO THE CENTER LINE OF PIPE, 4" MIN. UNDER PIPE. COMPACTED GRANULAR OR SELECT MATERIAL TO TOP OF PIPE. (APPROX. 90% STANDARD PROCTOR, AASHTO T-99)
THE CONTRACTOR IS RESPONSIBLE TO VERIFY THAT THESE CONDITION ARE MEET OR EXCEEDED. IN THE EVENT THE SOILS ARE WEAKER, THE BLOCK SIZE SHALL BE PROPORTIONATELY INCREASED.

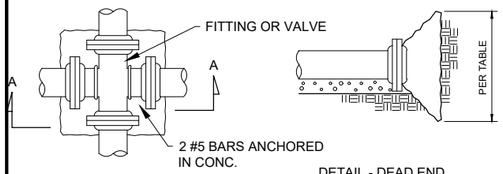

PLAN - THRUST BLOCK

DETAIL - DEAD END THRUST BLOCK

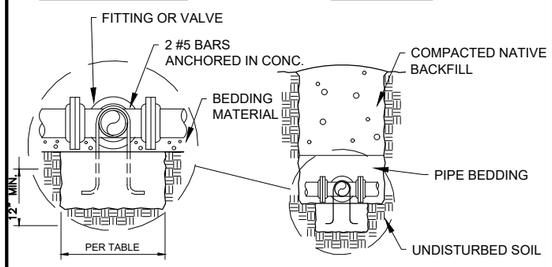

SECTION A-A

Bearing Pressure		1500	psi							
Test Pressure		200	psi							
Safety Factor		1.5	psi							
Thrust Block Areas		Cross	Tee	Wye	Dead End	Valve	90 deg bend	45 deg bend	22.5 deg bend	11.25 deg bend
4	0.087266	2.4	1.7	1.7	1.7		2.4	1.3	1.0	1.0
6	0.19635	5.4	3.8	3.8	3.8		5.4	2.9	1.5	1.0
8	0.349066	9.5	6.8	6.8	6.8		9.5	5.2	2.6	1.3
10	0.545415	14.9	10.6	10.6	10.6		14.9	8.1	4.1	2.1
12	0.785398	21.5	15.2	15.2	15.2	15.2	21.5	11.6	5.9	3.0
14	1.069014	29.2	20.7	20.7	20.7	20.7	29.2	15.8	8.1	4.1
16	1.396263	38.2	27.0	27.0	27.0	27.0	38.2	20.7	10.5	5.3
18	1.767146	48.3	34.2	34.2	34.2	34.2	48.3	26.2	13.3	6.7
20	2.181662	59.7	42.2	42.2	42.2	42.2	59.7	59.7	16.5	8.3
24	3.141593	85.9	60.8	60.8	60.8	60.8	85.9	46.5	23.7	11.9
30	4.908739	134.2	95.0	95.0	95.0	95.0	134.2	72.7	37.0	18.7
36	7.068583	193.2	136.8	136.8	136.8	136.8	193.2	104.6	53.3	26.9

Bearing Pressure		2000	psi							
Test Pressure		150	psi							
Safety Factor		1.5	psi							
Thrust Block Areas		Cross	Tee	Wye	Dead End	Valve	90 deg bend	45 deg bend	22.5 deg bend	11.25 deg bend
4	0.087266	1.3	1.0	1.0	1.0		1.3	0.7	1.0	1.0
6	0.19635	3.0	2.1	2.1	2.1		3.0	1.6	0.8	1.0
8	0.349066	5.4	3.8	3.8	3.8		5.4	2.9	1.5	0.7
10	0.545415	8.4	5.9	5.9	5.9		8.4	4.5	2.3	1.2
12	0.785398	12.1	8.6	8.6	8.6	8.6	12.1	6.5	3.3	1.7
14	1.069014	16.4	11.6	11.6	11.6	11.6	16.4	8.9	4.5	2.3
16	1.396263	21.5	15.2	15.2	15.2	15.2	21.5	11.6	5.9	3.0
18	1.767146	27.2	19.2	19.2	19.2	19.2	27.2	14.7	7.5	3.8
20	2.181662	33.5	23.8	23.8	23.8	23.8	33.5	18.2	9.3	4.7
24	3.141593	48.3	34.2	34.2	34.2	34.2	48.3	26.2	13.3	6.7
30	4.908739	75.5	53.4	53.4	53.4	53.4	75.5	40.9	20.8	10.5
36	7.068583	108.7	77.0	77.0	77.0	77.0	108.7	58.9	30.0	15.1

PVC VERTICAL BEND RESTRAINED LENGTHS IN FT.
(L_1-BEFORE CONNECTION/L_2 AFTER CONNECTION)

BEND ANGLE	PIPE SIZE											
	4	6	8	10	12	14	16	18	20	24	30	36
11.25	4/1	5/2	7/2	9/3	10/3	12/4	13/4	15/5	16/5	19/6	28/8	46/9
22.5	8/3	11/4	15/5	17/6	21/7	24/8	27/9	30/9	33/10	38/12	48/15	60/17
45	16/5	23/8	30/10	36/12	43/14	49/16	56/18	62/20	68/21	79/25	101/31	145/36

CALCULATIONS BASED ON THE ELEVATION OF THE PIPE REMAINING CONSTANT WITH THE CONTOUR OF THE GROUND.

NOTE
FOR TWO WAY FLOW, SUCH AS FOUND IN DISTRIBUTION SYSTEMS, USE L_1 ON BOTH SIDES OF FITTING.

DIP VERTICAL BEND RESTRAINED LENGTHS IN FT.
(L_1,BEFORE CONNECTION/L_2,-AFTER CONNECTION)

BEND ANGLE	PIPE SIZE											
	4	6	8	10	12	14	16	18	20	24	30	36
11.25	2/1	4/2	5/2	6/2	7/3	8/3	8/4	9/4	10/4	12/5	18-6	30-7
22.5	5/2	7/3	9/4	11/5	13/6	15/6	17/7	19/8	21/9	25/11	30-12	36-14
45	11/5	15/6	20/8	23/10	28/12	32/13	36/15	40/17	43/18	49/21	59/25	69-29

CALCULATIONS BASED ON THE ELEVATION OF THE PIPE REMAINING CONSTANT WITH THE CONTOUR OF THE GROUND.

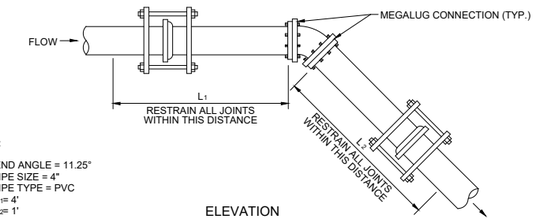

EXAMPLE:

GIVEN: BEND ANGLE = 11.25"
PIPE SIZE = 4"
PIPE TYPE = PVC
L = 4'
L = 1'

ELEVATION

PVC HORIZONTAL BEND RESTRAINED LENGTHS L, IN FT.

BEND ANGLE	PIPE SIZE											
	4	6	8	10	12	14	16	18	20	24	30	36
11.25	1	2	2	3	3	4	4	5	5	6	8	9
22.5	3	4	5	6	7	8	9	9	10	12	15	17
45	5	8	10	12	14	16	18	20	21	25	31	36
90	13	18	24	29	34	38	43	47	52	60	75	85

NOTES:

1. ALL JOINTS WITHIN THE "L" DISTANCE SHALL BE RESTRAINED

DIP HORIZONTAL BEND RESTRAINED LENGTHS L, IN FT.

BEND ANGLE	PIPE SIZE											
	4	6	8	10	12	14	16	18	20	24	30	36
11.25	1	2	2	2	3	3	4	4	4	5	6	7
22.5	2	3	4	5	6	6	7	8	9	10	12	14
45	5	6	8	10	12	13	15	17	18	21	25	29
90	11	15	20	24	28	32	36	40	44	51	60	69

NOTES:

1. ALL JOINTS WITHIN THE "L" DISTANCE SHALL BE RESTRAINED

EXAMPLE:

GIVEN: BEND ANGLE = 45"
PIPE SIZE = 6"
PIPE TYPE = PVC
L = 8'

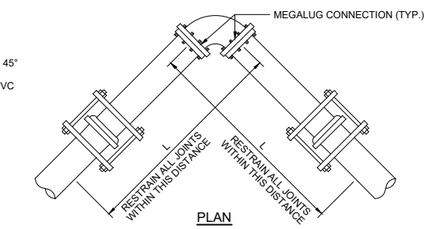

PLAN

PVC TEE RESTRAINED LENGTHS L, IN FT.

BRANCH SIZE DIA.	RUN SIZE DIAMETER											
	4	6	8	10	12	14	16	18	20	24	30	36
4	*	*	*	*	*	*	*	*	*	*	*	*
6	-	*	*	*	*	*	*	*	*	*	*	*
8	-	-	*	*	*	*	*	*	*	*	*	*
10	-	-	-	*	*	*	*	*	*	*	*	*
12	-	-	-	-	*	*	*	*	*	*	*	*
14	-	-	-	-	-	*	*	*	*	*	*	*
16	-	-	-	-	-	-	7	*	*	*	*	*
18	-	-	-	-	-	-	-	20	4	*	*	*
20	-	-	-	-	-	-	-	-	34	3	*	*
24	-	-	-	-	-	-	-	-	-	60	34	3

* = FOR THIS CONDITION NEED ONLY RESTRAIN THE OUTLETS OF TEE

NOTES:

1. RESTRAIN THE THREE MECHANICAL JOINTS ON THE TEE.
2. ALL JOINTS WITHIN THE "L" DISTANCE ON THE BRANCH SIDE OF TEE SHALL BE RESTRAINED AND ALL JOINTS WITHIN 20' ON THE RUN SIDE OF THE TEE SHALL BE RESTRAINED.

DIP TEE RESTRAINED LENGTHS L, IN FT.

BRANCH SIZE DIA.	RUN SIZE DIAMETER											
	4	6	8	10	12	14	16	18	20	24	30	36
4	*	*	*	*	*	*	*	*	*	*	*	*
6	-	*	*	*	*	*	*	*	*	*	*	*
8	-	-	*	*	*	*	*	*	*	*	*	*
10	-	-	-	*	*	*	*	*	*	*	*	*
12	-	-	-	-	*	*	*	*	*	*	*	*
14	-	-	-	-	-	*	*	*	*	*	*	*
16	-	-	-	-	-	-	12	2	*	*	*	*
18	-	-	-	-	-	-	-	21	12	*	~	*
20	-	-	-	-	-	-	-	-	30	12	~	~
24	-	-	-	-	-	-	-	-	-	47	22	2

* = FOR THIS CONDITION NEED ONLY RESTRAIN THE OUTLETS OF TEE

NOTES:

1. RESTRAIN THE THREE MECHANICAL JOINTS ON THE TEE.
2. ALL JOINTS WITHIN THE "L" DISTANCE ON THE BRANCH SIDE OF TEE SHALL BE RESTRAINED AND ALL JOINTS WITHIN 18' ON THE RUN SIDE OF THE TEE SHALL BE RESTRAINED.

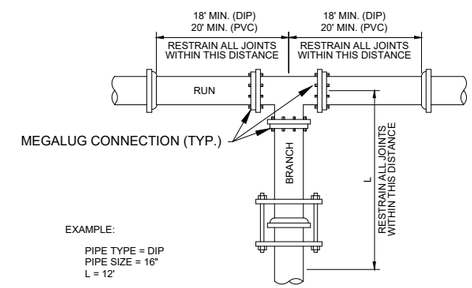

EXAMPLE:

PIPE TYPE = DIP
PIPE SIZE = 16"
L = 12'

PLAN

PVC REDUCER RESTRAINED LENGTHS L, IN FT.
(SMALL SIDE/LARGE SIDE)

D2 \ D1	6	8	10	12	14	16	18	20	24
4	42/29	100/52	171/71	258/90	-	-	-	-	-
6	-	40/31	88/54	147/75	217/95	297/113	-	-	-
8	-	-	37/29	82/55	135/77	197/98	266/117	-	-
10	-	-	-	36/30	79/56	128/80	183/100	244/120	-
12	-	-	-	-	36/30	77/57	123/80	174/102	293/142
14	-	-	-	-	-	35/30	74/57	118/81	219/124
16	-	-	-	-	-	-	34/30	73/57	161/104
18	-	-	-	-	-	-	-	34/30	111/82
20	-	-	-	-	-	-	-	-	70/57

NOTES:

1. ALL JOINTS WITHIN THE "L" DISTANCE SHALL BE RESTRAINED

DIP REDUCER RESTRAINED LENGTHS L, IN FT.
(SMALL SIDE/LARGE SIDE)

D2 \ D1	6	8	10	12	14	16	18	20	24
4	27/18	65/34	110/46	166/58	-	-	-	-	-
6	-	26/20	57/35	95/48	140/61	192/73	-	-	-
8	-	-	24/19	53/35	87/50	127/63	171/75	-	-
10	-	-	-	23/20	51/36	82/51	118/64	158/77	-
12	-	-	-	-	23/20	49/37	79/52	112/66	188/91
14	-	-	-	-	-	22/20	48/37	76/52	141/80
16	-	-	-	-	-	-	22/19	47/37	103/67
18	-	-	-	-	-	-	-	22/19	72/53
20	-	-	-	-	-	-	-	-	45/37

NOTES:

1. ALL JOINTS WITHIN THE "L" DISTANCE SHALL BE RESTRAINED

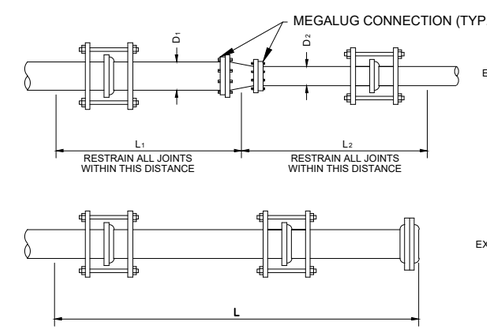

EXAMPLE:

PIPE TYPE = PVC
D_1 = 8"
D_2 = 6"
L_1 = 31'
L_2 = 40'

EXAMPLE:

PIPE TYPE = DIP
PIPE SIZE = 10"
L = 57'

PVC DEAD END RESTRAINED LENGTHS L, IN FT.

PIPE SIZE									
4	6	8	10	12	14	16	18	20	24
39	55	73	88	104	119	134	149	163	192

NOTES:

1. ALL JOINTS WITHIN THE "L" DISTANCE SHALL BE RESTRAINED

DIP DEAD END RESTRAINED LENGTHS L, IN FT.

PIPE SIZE									
4	6	8	10	12	14	16	18	20	24
25	36	47	57	67	76	86	95	105	123

NOTES:

1. ALL JOINTS WITHIN THE "L" DISTANCE SHALL BE RESTRAINED

NOTES:

1. ALL THRUST BLOCK BEARING FACES SHALL BE PLACED AGAINST UNDISTURBED SOIL OR APPROVED COMPACTED BACKFILL.
2. SQUARE ALL EDGES TO RECEIVE CONCRETE.
3. CONCRETE SHALL BE 3500 PSI.
4. CALCULATED ON 150 PSI TEST PRESSURE AND ALLOWABLE BEARING PRESSURE OF 2000 LBS. PER SQUARE FOOT.
5. IN POORER SOILS, SPECIAL DESIGN IS REQUIRED.
6. ALL FITTINGS AND VALVES SHALL BE ANCHORED W/ TWO #5 REBAR. ONLY ONE REQUIRED FOR REDUCER.
7. CENTER ALL FITTINGS OVER THRUST BLOCKS.
8. THRUST BLOCK CONCRETE SHALL NOT BE PLACED WITHIN 1 $\frac{1}{2}$" OF JOINTS AND/OR BOLTS.
9. ALL METAL CONTACT AREAS SHALL BE COVERED WITH POLY WRAP PRIOR TO CONCRETE PLACEMENT.

A ~ PIPING RESTRAINTS
TYPICAL

REV NO.	COMMENT	DATE

SUNRISE ENGINEERING
770 S WASHINGTON ST.
AFTON, WYOMING 83110
TEL 307.885.8500 · FAX 307.885.8501
www.sunrise-eng.com

GR-RS-SC JPWB

CROSSROADS PUMP STATION

PIPING DETAILS

SEI NO.	DESIGNED	DRAWN	CHECKED	SHEET NO.	
07265	FDK	BJ	JJL	81 of 99	D3

P:\WMDC GR-RS-SC JPWB Cross Roads Pump Station Level III (S07265)\Dwg C3D\Pump Station\Details\Building Details.dwg Feb 13, 2026 9:40am bjenkins

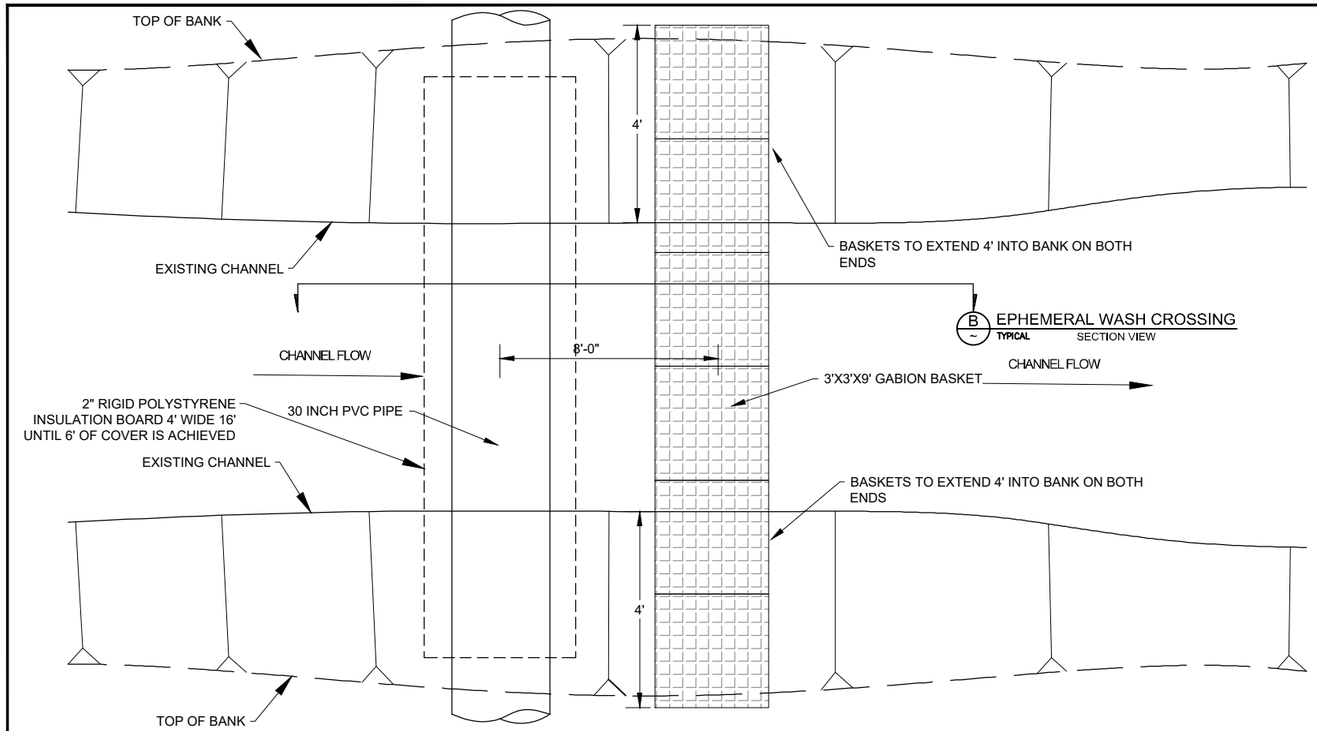

A ~ EPHEMERAL WASH CROSSING
TYPICAL PLAN VIEW

B ~ EPHEMERAL WASH CROSSING
TYPICAL SECTION VIEW

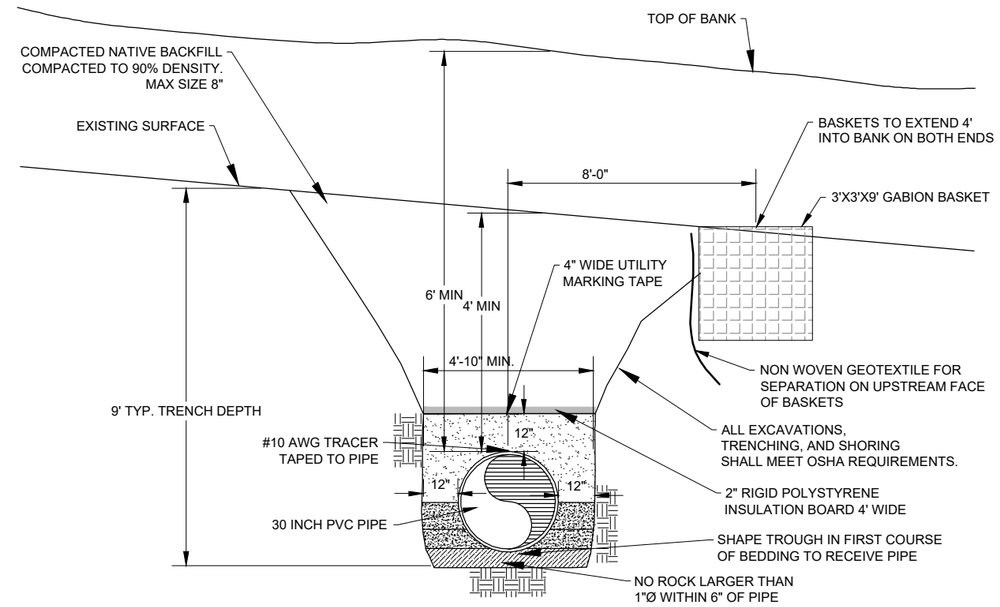

B ~ EPHEMERAL WASH CROSSING
TYPICAL SECTION VIEW

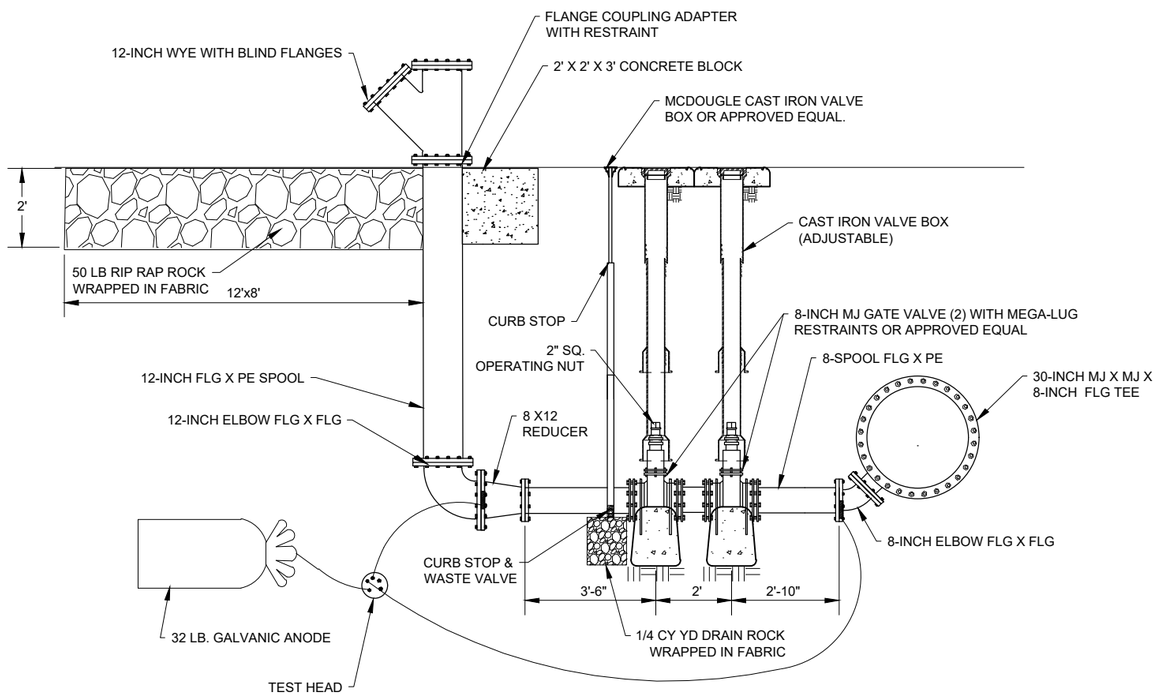

C ~ BLOW OFF ASSEMBLY
TYPICAL DETAIL

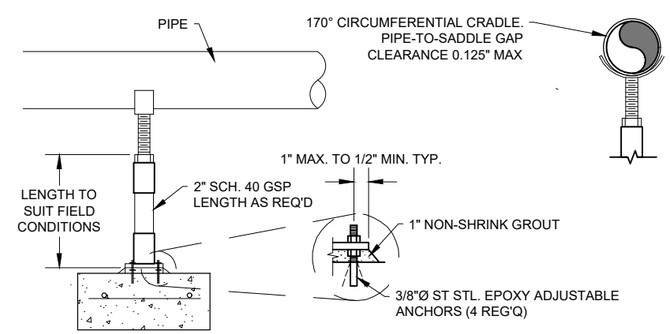

D ~ PIPE SUPPORT
TYPICAL DETAIL

REV NO.	COMMENT	DATE

SUNRISE ENGINEERING
770 S WASHINGTON ST.
AFTON, WYOMING 83110
TEL 307.885.8500 · FAX 307.885.8501
www.sunrise-eng.com

GR-RS-SC JPWB

CROSSROADS PUMP STATION

PIPING DETAILS

SEI NO.	DESIGNED	DRAWN	CHECKED	SHEET NO.	
07265	FDK	BJ	JJL	82 of 99	D4

P:\WWDC GR-RS-SC JPWB Cross Roads Pump Station Level III (S07265)\Dwg C3D\Pump Station\Details\Pump Station Layout.dwg Feb 13, 2026 9:40am bjenkins

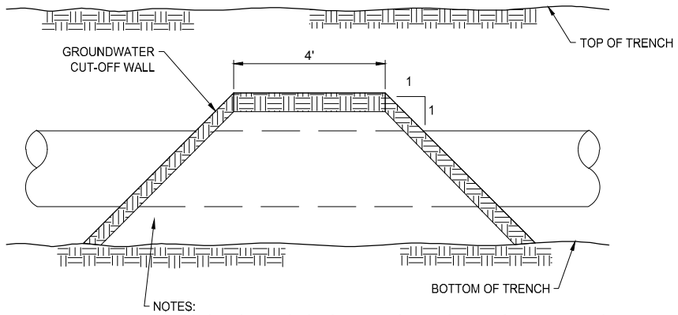

NOTES:
1. CONSTRUCT 4' THICK CUTOFF WALL TO REPLACE PIPE ZONE AND BEDDING MATERIAL. MATERIAL TO BE CONTROLLED LOW STRENGTH MATERIAL (CLSM) OR SAND AND 20 LB BENTONITE CLAY PER CUBIC YARD OR COHESIVE SOIL WITH NO LESS THAN 20% PASSING A NO. 200 SIEVE AND HAVING A PLASTICITY INDEX GREATER THAN 10 OR APPROVED EQUAL.
2. CUT OFF WALL TO EXTEND 1' WIDER THAN TRENCH WIDTH ON EACH SIDE.

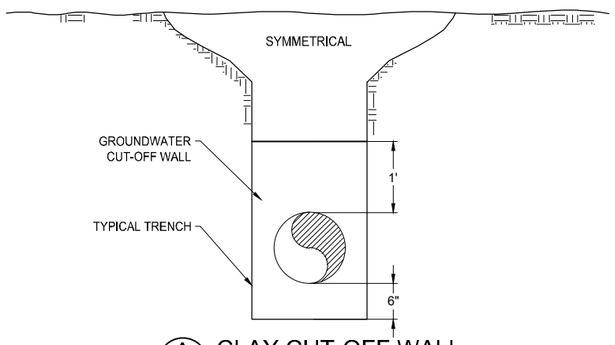

A CLAY CUT-OFF WALL
NOT TO SCALE DETAIL

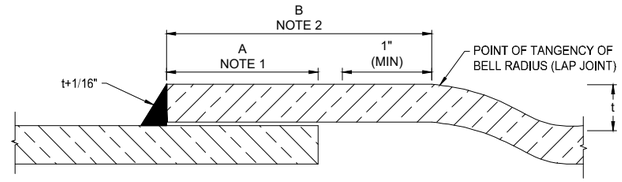

NOTES:
1. DIMENSION "A" CORRESPONDS TO THE COMPLETED JOINT OVERLAP AFTER WELDING. DIMENSION "A" SHALL BE THE GREATER OF 1" OR 3t, MINIMUM.
2. FOR STANDARD JOINTS, THE MINIMUM DIMENSION "B" SHALL BE AS REQUIRED TO PROVIDE THE MINIMUM OVERLAP DIMENSION "A" AND MAINTAIN THE INDICATED HOLDBACK FOR THE WELD.
3. CLEARANCE BETWEEN FAYING SURFACES OF LAP JOINTS SHALL NOT EXCEED 1/8 IN AT ANY LOCATION FOR FILLET WELDS ON PIPE HAVING WALL THICKNESS LESS THAN OR EQUAL TO 5/16 IN, AND CLEARANCE BETWEEN FAYING SURFACES OF LAP JOINTS SHALL NOT EXCEED 3/16 IN AT ANY LOCATION FOR FILLET WELDS ON PIPE HAVING WALL THICKNESS GREATER THAN 5/16 IN.
4. FILLET WELDS FOR BELL AND SPIGOT LAP JOINTS SHOWN. FILLET WELDS ON OTHER JOINTS ARE SIMILAR.
5. THE JOINTS SHALL BE FABRICATED AND INSTALLED TO BE WITHIN THE TOLERANCES INDICATED. THE TOLERANCE REQUIREMENTS SHALL APPLY TO BOTH WELDS AND TO BOTH STRAIGHT AND DEFLECTION JOINTS.

B SINGLE-WELDED LAP JOINT - I
NOT TO SCALE DETAIL

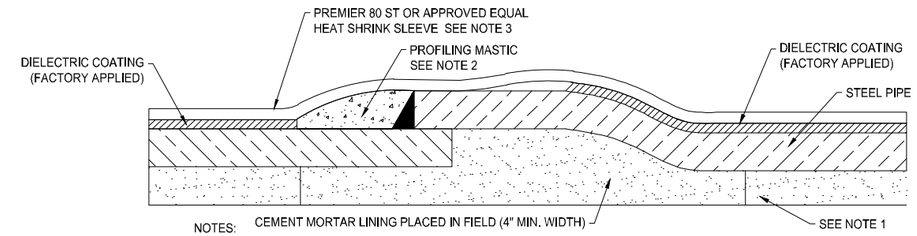

NOTES:
1. SHOP APPLIED CEMENT MORTAR LINING SHOWN. MINIMUM LINING THICKNESS SHALL BE 3/8".
2. FILL PRO PM-GP PROFILING MASTIC, OR APPROVED EQUAL
3. HEAT SHRINK SLEEVE SHALL EXTEND 3" ONTO FACTORY COATING.

C SINGLE-WELDED LAP JOINT COATING TREATMENT
NOT TO SCALE DETAIL

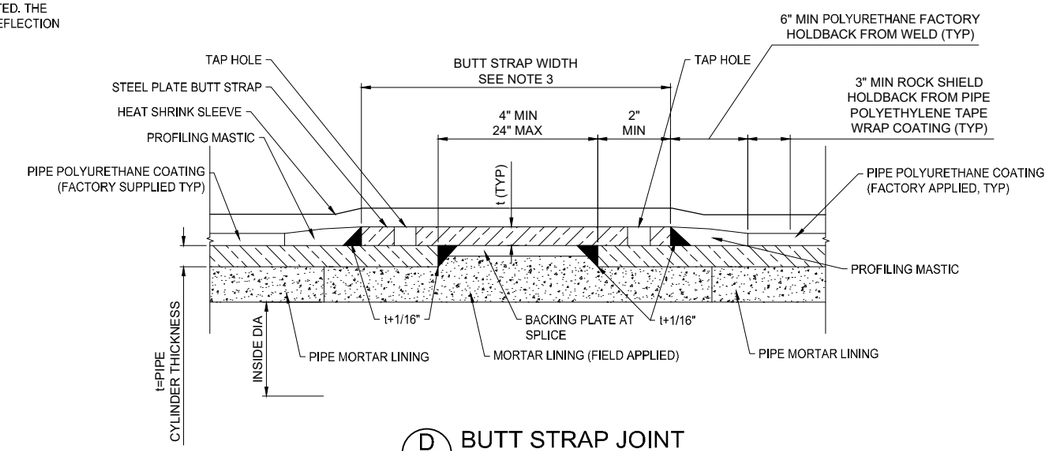

D BUTT STRAP JOINT
NOT TO SCALE DETAIL

NOTES:
1. CONTRACTOR SHALL CONDUCT AN AIR/SOAP SOLUTION LEAK TEST AT 40 PSI AIR PRESSURE IN ADDITION TO DYE PENETRANT OR MAGNETIC PARTICLE TESTING PERFORMED BY THE CONSTRUCTION MANAGER. IF LEAKS ARE DETECTED, REPAIR AND RETEST THE WELDS UNTIL THERE ARE NO DEFECTS, PLUG HOLES WITH A WELDED PLUG AT COMPLETION OF TEST AND COAT AS SHOWN. TAP HOLES MAY BE ON INSIDE OR OUTSIDE OF JOINT.
2. UNLESS OTHERWISE NOTED. BUTT STRAP WIDTH SHALL BE A MINIMUM OF 6".
3. PROFILING MASTIC SHALL BE FILL PRO PM-GP OR APPROVED EQUAL.

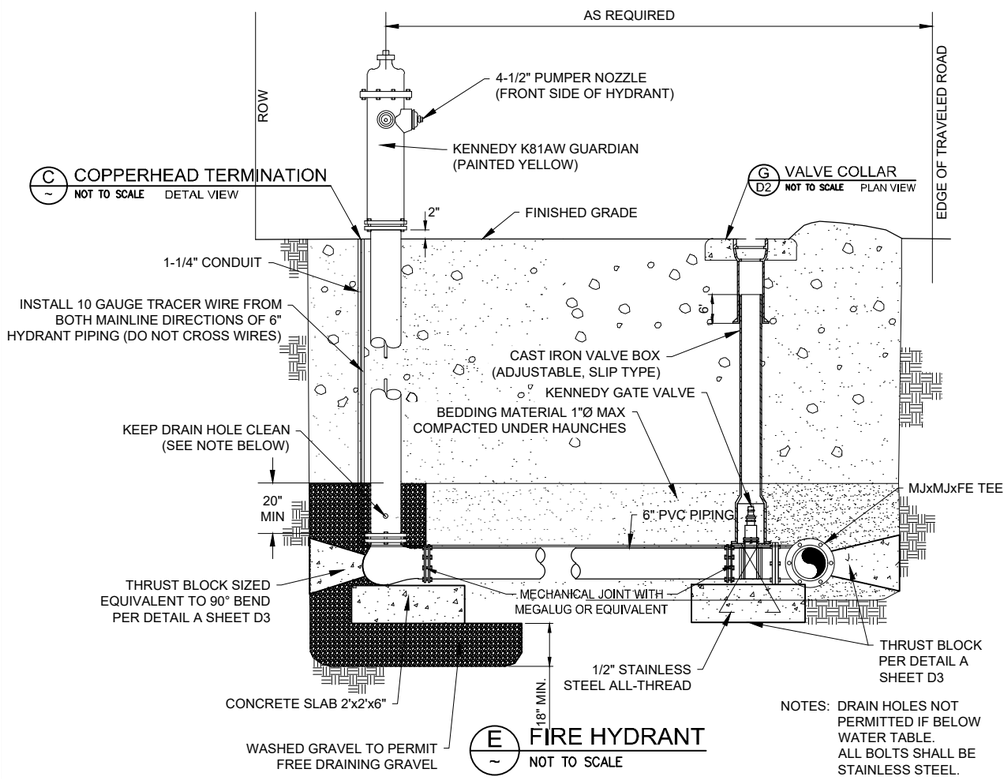

NOTES: DRAIN HOLES NOT PERMITTED IF BELOW WATER TABLE. ALL BOLTS SHALL BE STAINLESS STEEL.

E FIRE HYDRANT
NOT TO SCALE

REV NO.	COMMENT	DATE

SUNRISE ENGINEERING
770 S WASHINGTON ST.
AFTON, WYOMING 83110
TEL 307.885.8500 · FAX 307.885.8501
www.sunrise-eng.com

GR-RS-SC JPWB

CROSSROADS PUMP STATION

PIPING DETAILS

SEI NO.	DESIGNED	DRAWN	CHECKED	SHEET NO.	
07265	FDK	BJ	JJL	83 of 99	D5

P:\WWDC GR-RS-SC JPWB Cross Roads Pump Station Level III (S07265)\Dwg C3D\Civil Waterline\Details\Details.dwg Feb 13, 2026 9:40am bjenkins

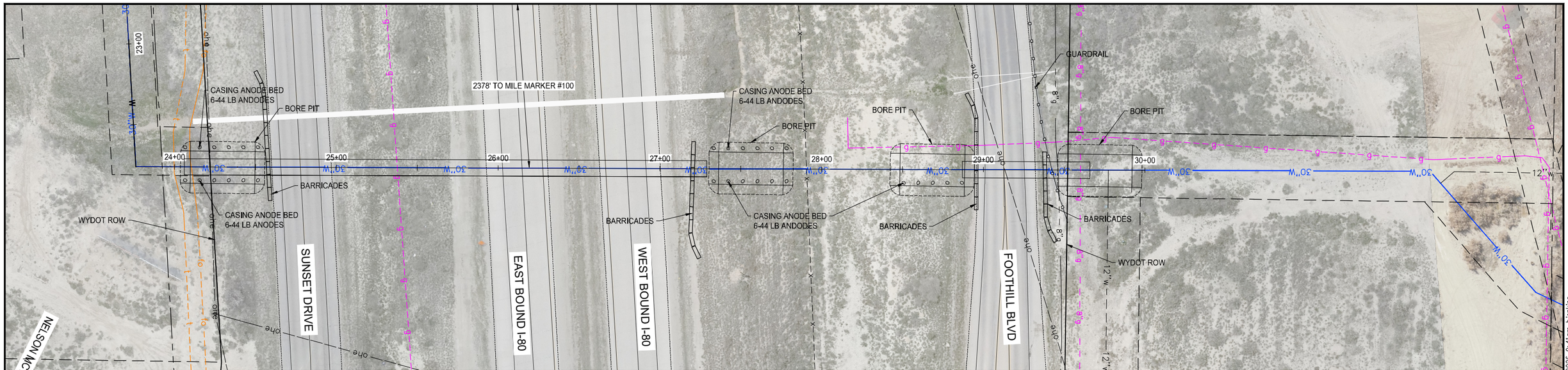

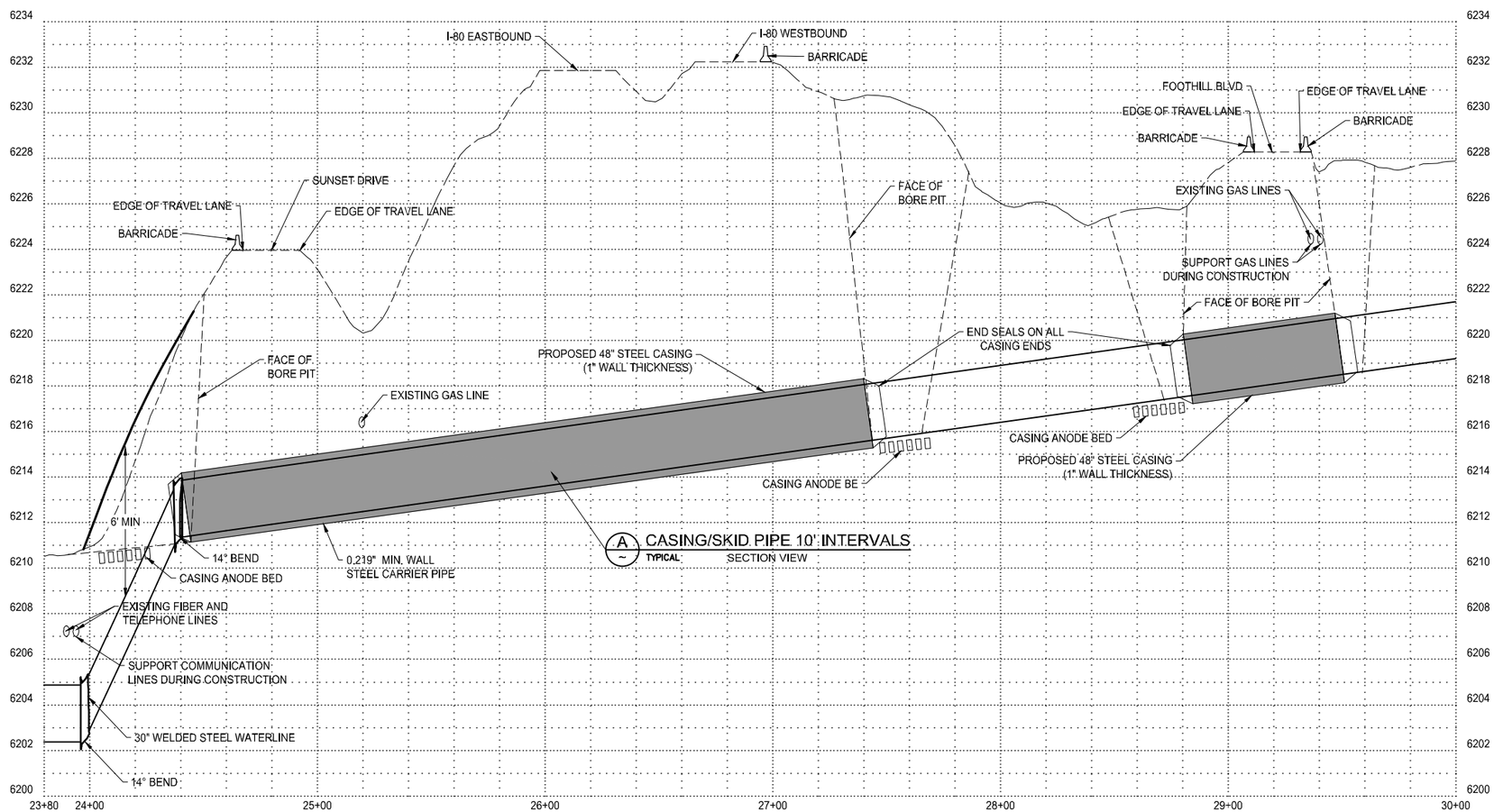

A CASING/SKID PIPE 10' INTERVALS
TYPICAL SECTION VIEW

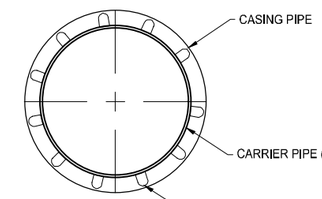

CASING SPACERS CAPABLE OF CARRYING WEIGHT OF PIPE PLUS WATER WEIGHT SPACING PER MFG RECOMMENDATION. CASING SPACERS SHALL BE NON CONDUCTIVE TO INSURE NO ELECTRICAL CONNECTIVITY BETWEEN CASING AND CARRIER PIPE.

A CASING/SKID PIPE 10' INTERVALS
TYPICAL SECTION VIEW

NOTE:
1. ALL WORK SHALL COMPLY WITH WYDOT ROW LICENSE INCLUDED IN PROJECT DOCUMENTS

NORTH

SCALE
0 30' 60'
HORIZ: 1" = 60'

811 Know what's below. Call before you dig. 1-800-849-2476

REV NO.	COMMENT	DATE

SUNRISE ENGINEERING
770 S WASHINGTON ST.
AFTON, WYOMING 83110
TEL 307.885.8500 · FAX 307.885.8501
www.sunrise-eng.com

GR-RS-SC JPWB

CROSSROADS PUMP STATION
I-80 PIPELINE CROSSING
PLAN AND PROFILE

SEI NO.	DESIGNED	DRAWN	CHECKED	SHEET NO.	
07265	FDK	BJ	JJL	84 of 99	D6

P:\WMDC GR-RS-SC JPWB Cross Roads Pump Station Level III (S07265)\Dwg C3D\Civil\Waterline\Plan & Profile\New I-80 Crossing.dwg Feb 13, 2026 9:41am bjenkins

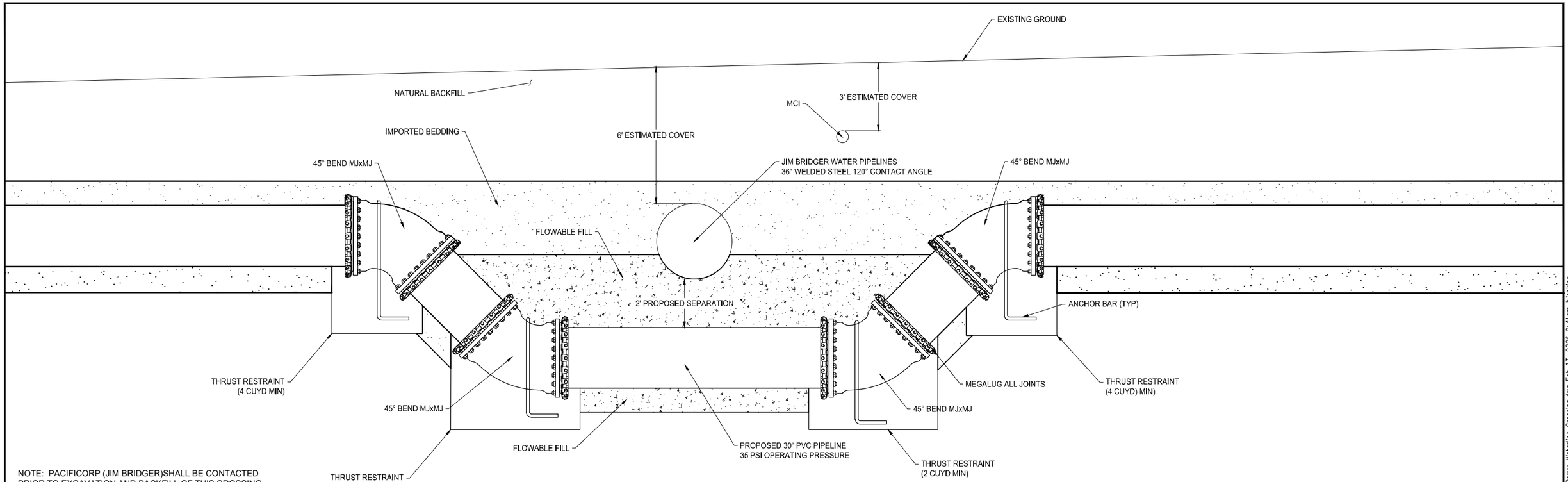

NOTE: PACIFICORP (JIM BRIDGER)SHALL BE CONTACTED PRIOR TO EXCAVATION AND BACKFILL OF THIS CROSSING TO ALLOW THEIR OBSERVATION. CONTRACTOR SHALL COMPLY WITH TERMS OF ENCROACHMENT PERMIT INCLUDING INSURANCE REQUIREMENT.

A ~ JIM BRIDGER PIPELINE CROSSING STA: 111+37

DETAIL

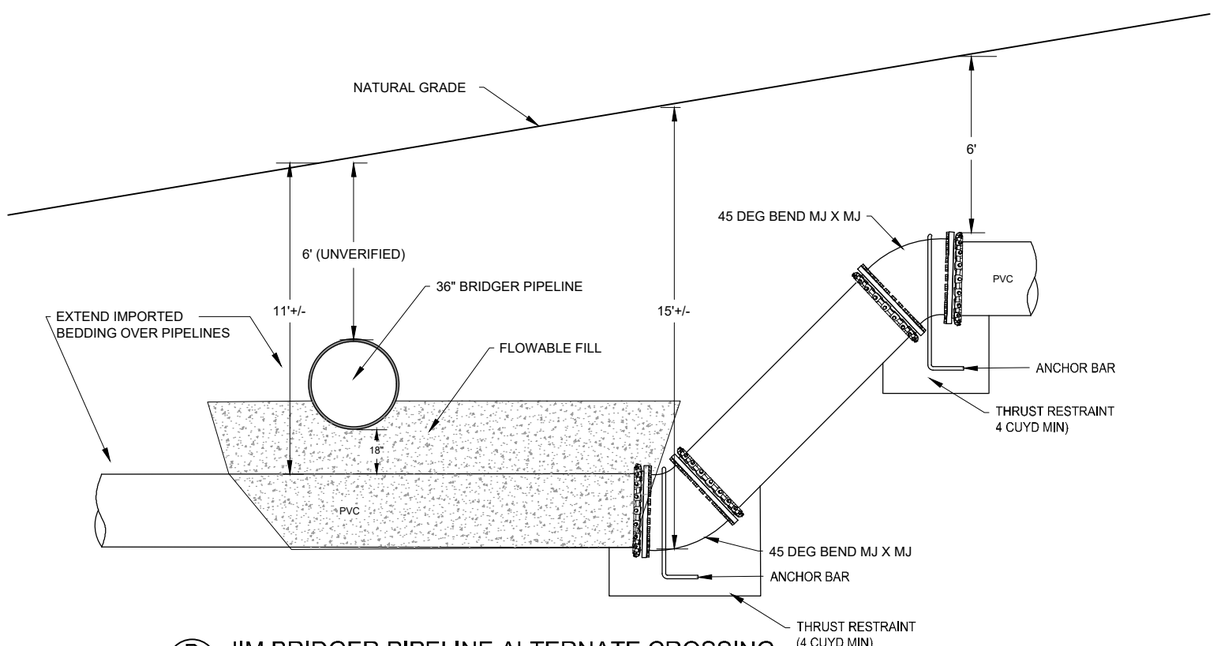

B ~ JIM BRIDGER PIPELINE ALTERNATE CROSSING

NOT TO SCALE SECTION VIEW

NOTE: PACIFICORP (JIM BRIDGER)SHALL BE CONTACTED PRIOR TO EXCAVATION AND BACKFILL OF THIS CROSSING TO ALLOW THEIR OBSERVATION. CONTRACTOR SHALL COMPLY WITH TERMS OF ENCROACHMENT PERMIT INCLUDING INSURANCE REQUIREMENT.

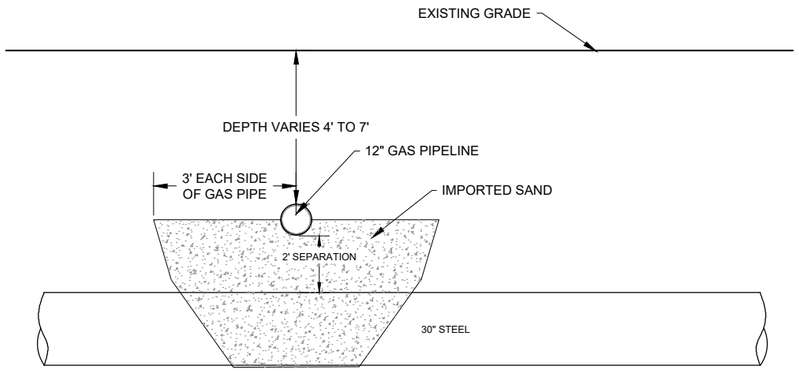

NOTE: KINDER MORGAN SHALL BE CONTACTED PRIOR TO EXCAVATION AND BACKFILL OF THIS CROSSING TO ALLOW THEIR OBSERVATION.

C ~ GAS PIPELINE CROSSINGS

NOT TO SCALE SECTION VIEW

REV NO.	COMMENT	DATE

SUNRISE ENGINEERING
770 S WASHINGTON ST.
AFTON, WYOMING 83110
TEL 307.885.8500 · FAX 307.885.8501
www.sunrise-eng.com

GR-RS-SC JPWB

CROSSROADS PUMP STATION
JIM BRIDGER PIPELINE CROSSING
DETAILS

SEI NO.	DESIGNED	DRAWN	CHECKED	SHEET NO.	
07265	FDK	BJ	JJL	85 of 99	D7

P:\WWDC GR-RS-SC JPWB Cross Roads Pump Station Level III (S07265)\Dwg C3D\Civil\Waterline\Details\Pacific Power Waterline Crossing.dwg Feb 13, 2026 9:41am bjenkins

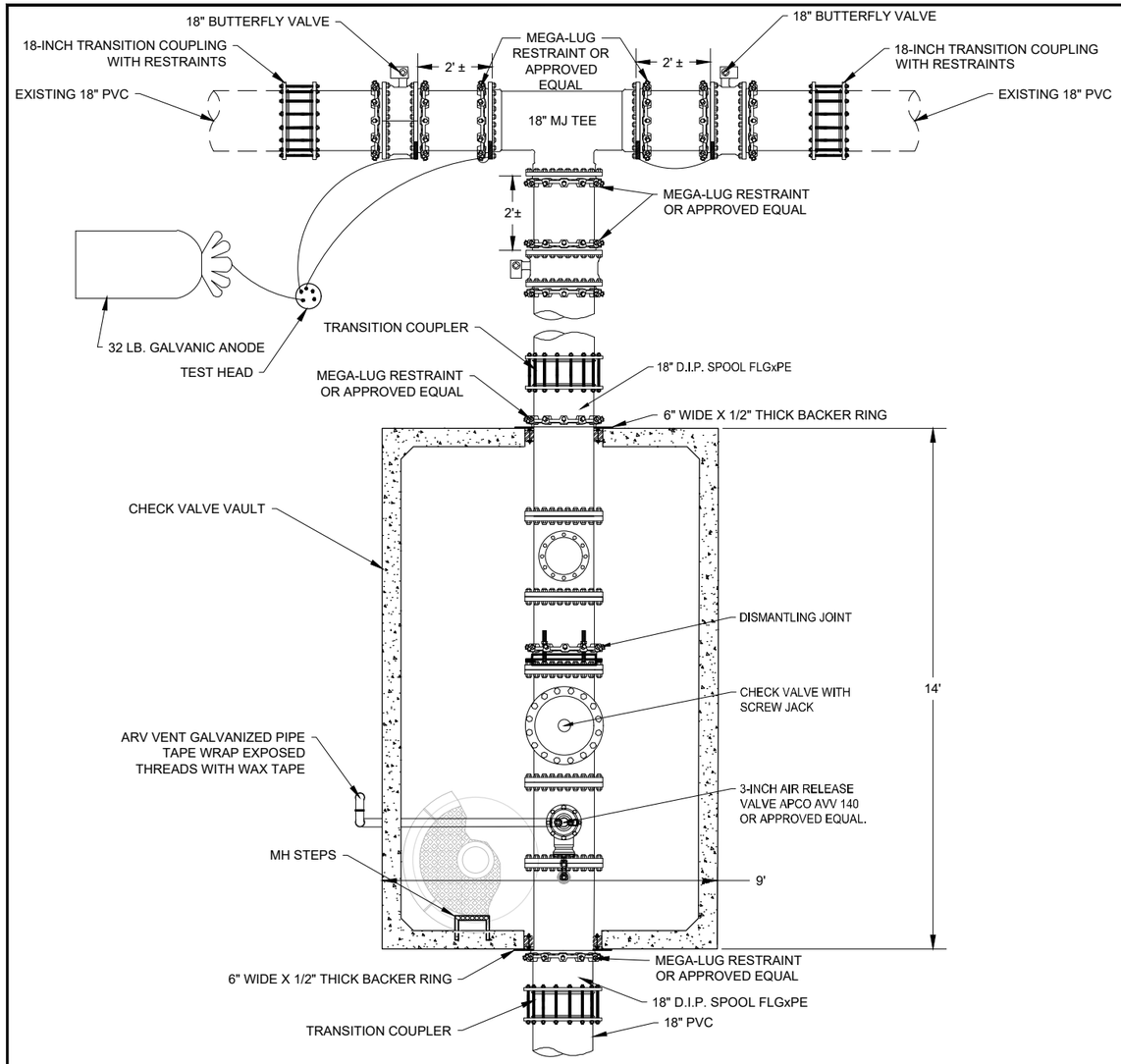

A ~ 18"x18" CONNECTION NEAR WATER TANK (STA: 145+40 & 146+26)
NOT TO SCALE PLAN VIEW

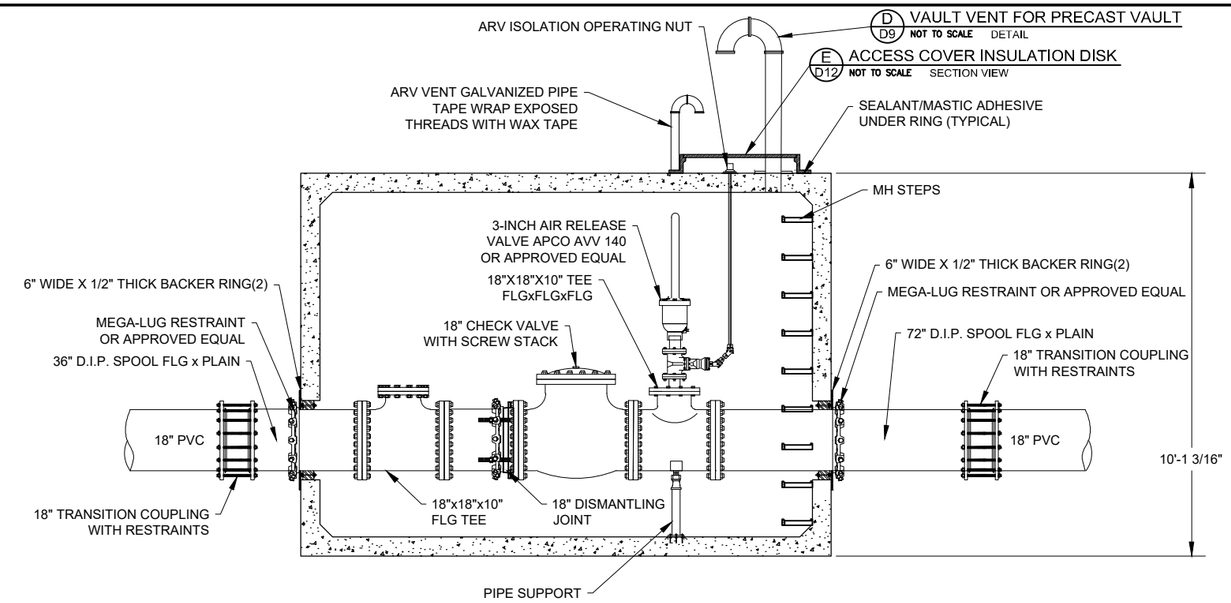

D D9 VAULT VENT FOR PRECAST VAULT
NOT TO SCALE DETAIL

E D12 ACCESS COVER INSULATION DISK
NOT TO SCALE SECTION VIEW

B ~ 18"x18" CHECK VALVE NEAR STA: 145+40
NOT TO SCALE ELEVATION VIEW

NOTE: ON ALL STRUCTURES, PLACE BOLLARDS ACCORDING TO DETAIL C SHEET D20 AND ASSOCIATED TABLE

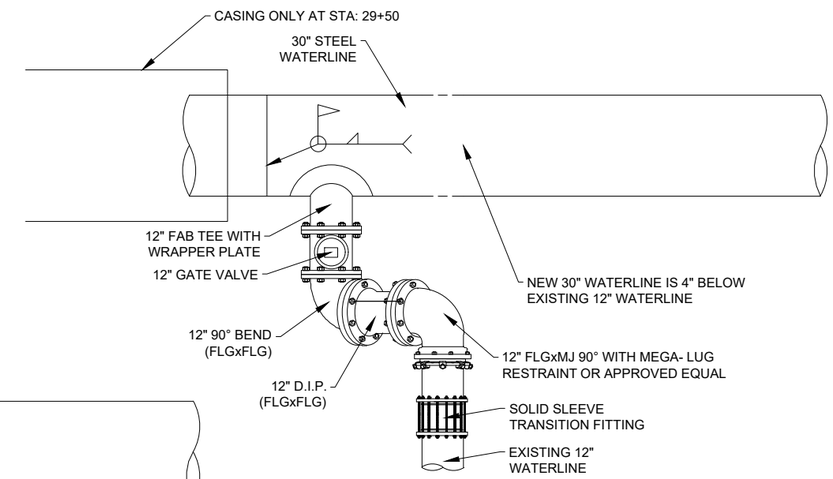

E ~ 30"x12" CONNECTION (STA: 29+40)
TYPICAL PLAN VIEW

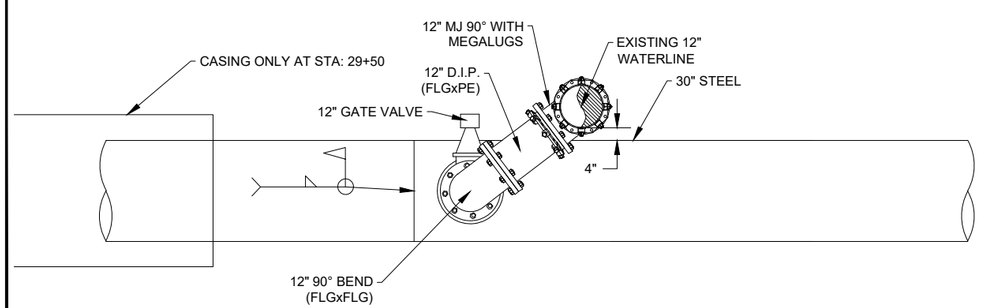

C ~ 30"x12" CONNECTION (STA: 29+40 & 31+49)
TYPICAL ELEVATION VIEW

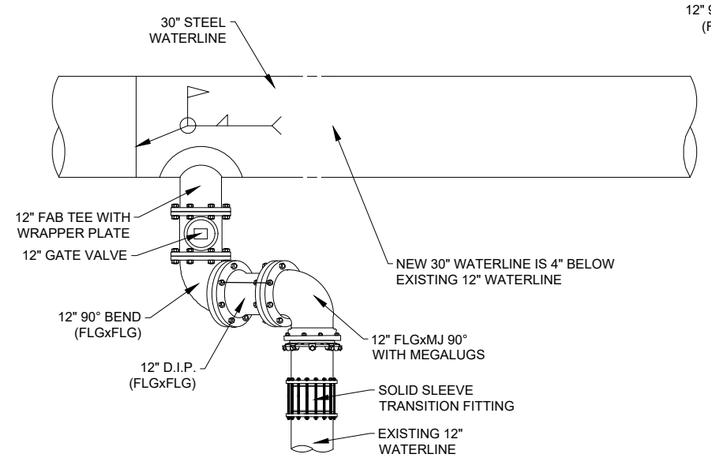

D ~ 30"x12" CONNECTION (STA: 31+49)
TYPICAL PLAN VIEW

REV NO.	COMMENT	DATE

SUNRISE ENGINEERING
770 S WASHINGTON ST.
AFTON, WYOMING 83110
TEL 307.885.8500 · FAX 307.885.8501
www.sunrise-eng.com

GR-RS-SC JPWB

CROSSROADS PUMP STATION

WATERLINE CONNECTION DETAILS

SEI NO.	DESIGNED	DRAWN	CHECKED	SHEET NO.	
07265	FDK	BJ	JJL	86 of 99	D8

P:\WWDC GR-RS-SC JPWB Cross Roads Pump Station Level III (S07265)\Dwg C3D\Pump Station\Details\Building Details.dwg Feb 13, 2026 9:41am bjenkins

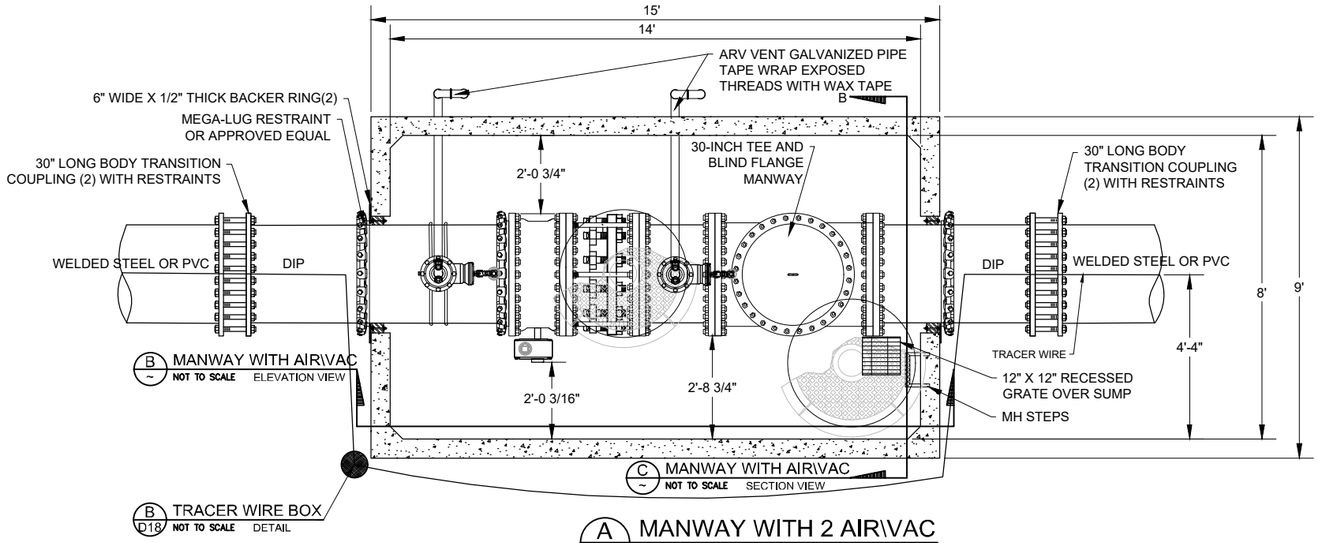

A MANWAY WITH 2 AIR\VAC
NOT TO SCALE PLAN VIEW

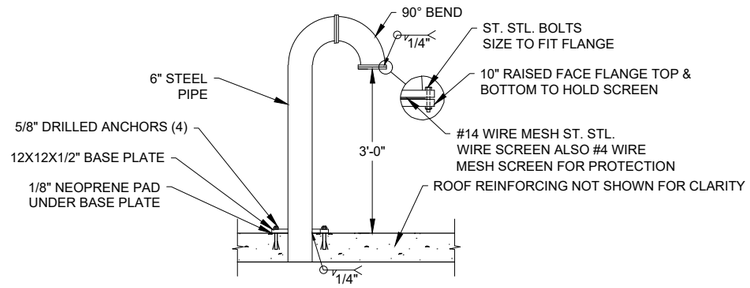

D VAULT VENT FOR PRECAST VAULT
NOT TO SCALE DETAIL

NOTE:
1. HOT DIP GALVANIZE ALL PARTS EXCEPT SCREEN & BOLTS AFTER WELDING COMPLETED.

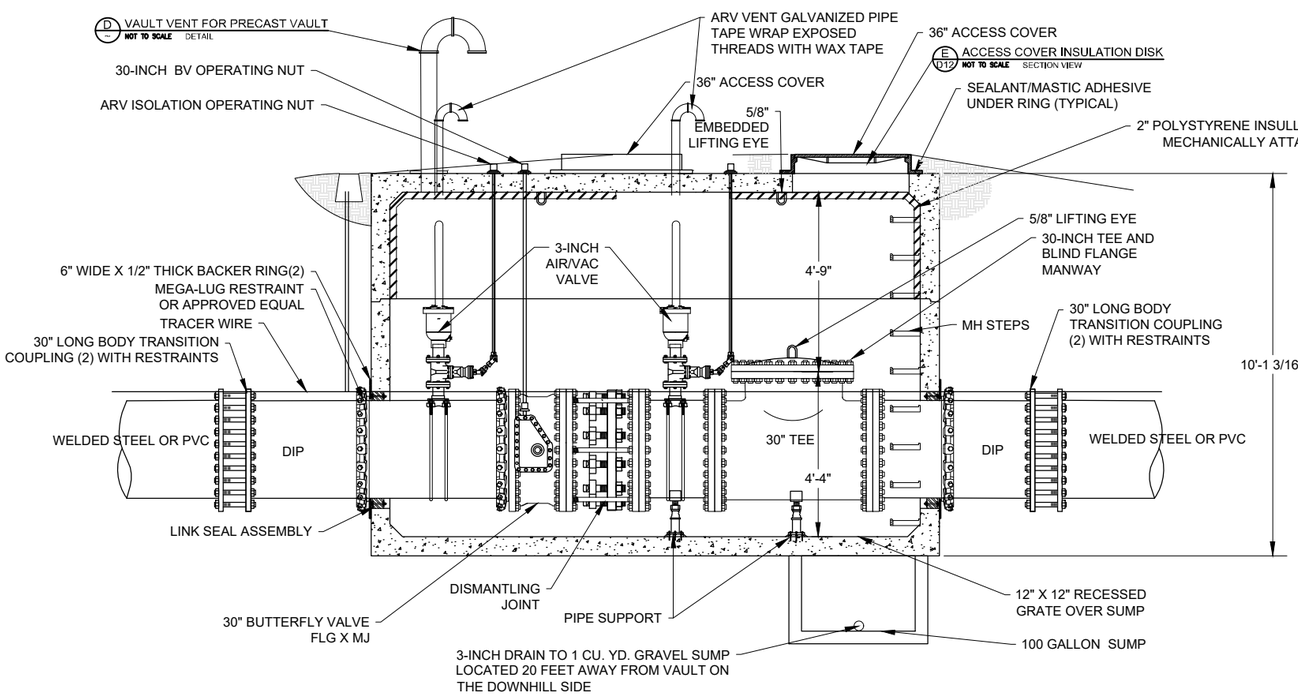

B MANWAY WITH 2 AIR\VAC
NOT TO SCALE ELEVATION VIEW

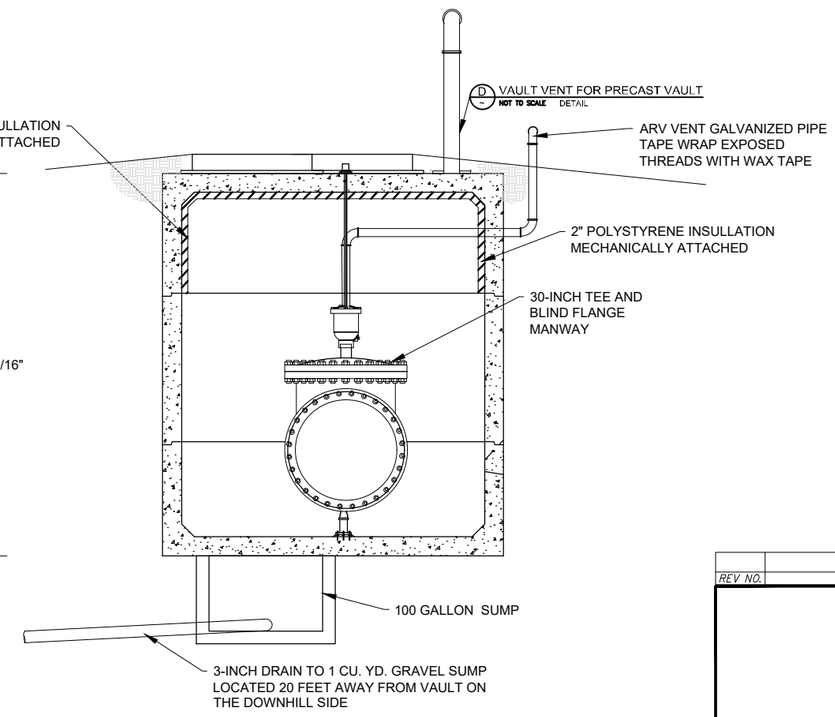

C MANWAY WITH AIR\VAC
NOT TO SCALE SECTION VIEW

REV NO.	COMMENT	DATE

SUNRISE ENGINEERING
770 S WASHINGTON ST.
AFTON, WYOMING 83110
TEL 307.885.8500 · FAX 307.885.8501
www.sunrise-eng.com

GR–RS–SC JPWB

CROSSROADS PUMP STATION
MANWAY WITH ISOLATION VALVE
DETAILS

SEI NO.	DESIGNED	DRAWN	CHECKED	SHEET NO.	
07265	FDK	BJ	JJL	87 of 99	D9

P:\WWDC GR-RS-SC JPWB Cross Roads Pump Station Level III (S07265)\Dwg C3D\Pump Station\Details\Pump Station Layout.dwg Feb 13, 2026 9:41am bjenkins

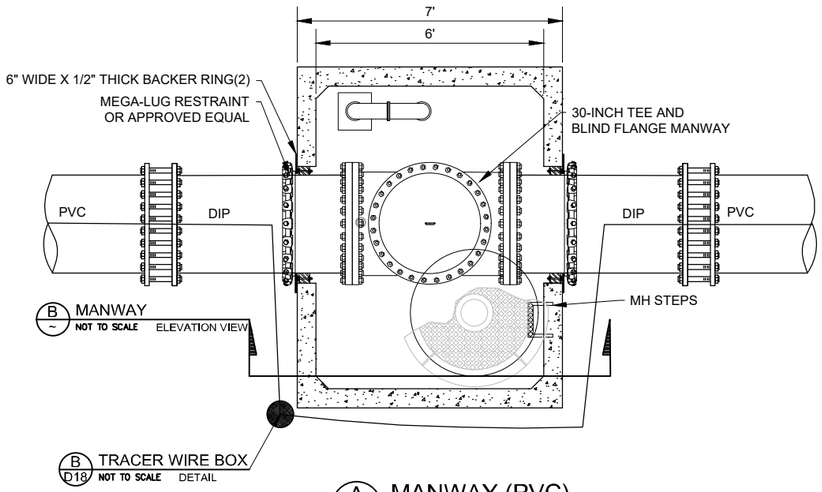

A ~ MANWAY (PVC)
NOT TO SCALE PLAN VIEW

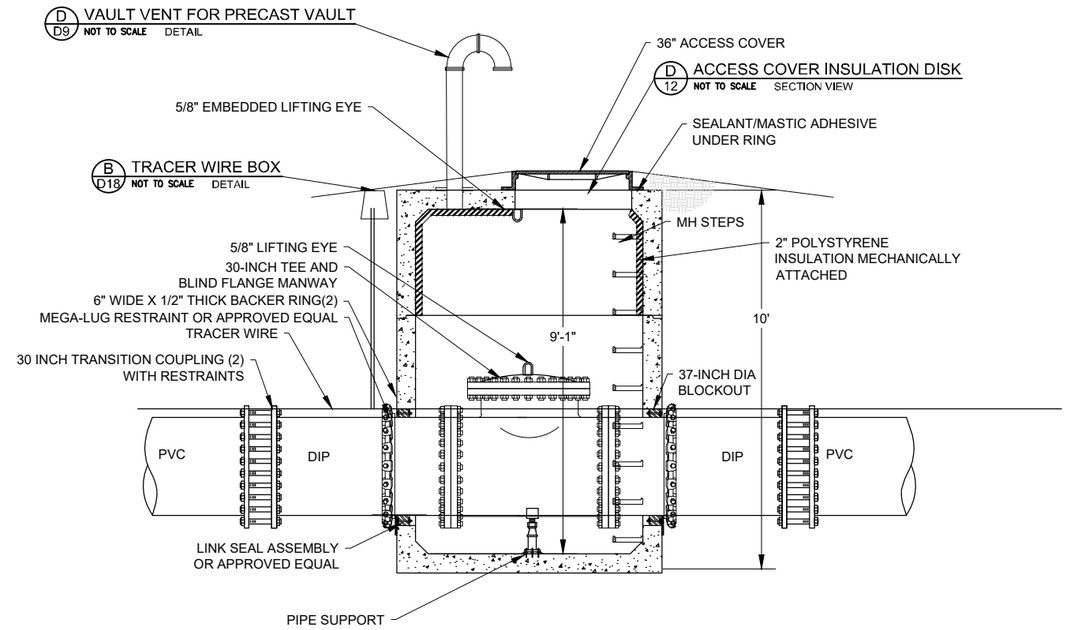

B ~ MANWAY (PVC)
NOT TO SCALE ELEVATION VIEW

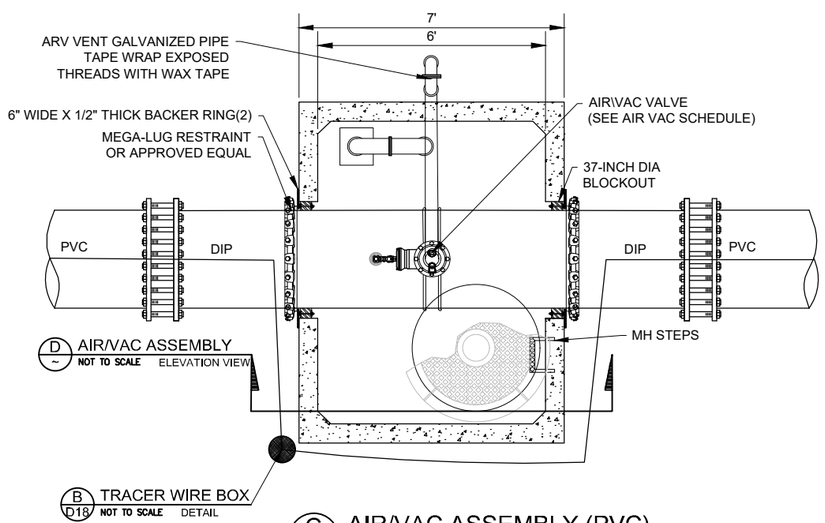

C ~ AIR/VAC ASSEMBLY (PVC)
NOT TO SCALE PLAN VIEW

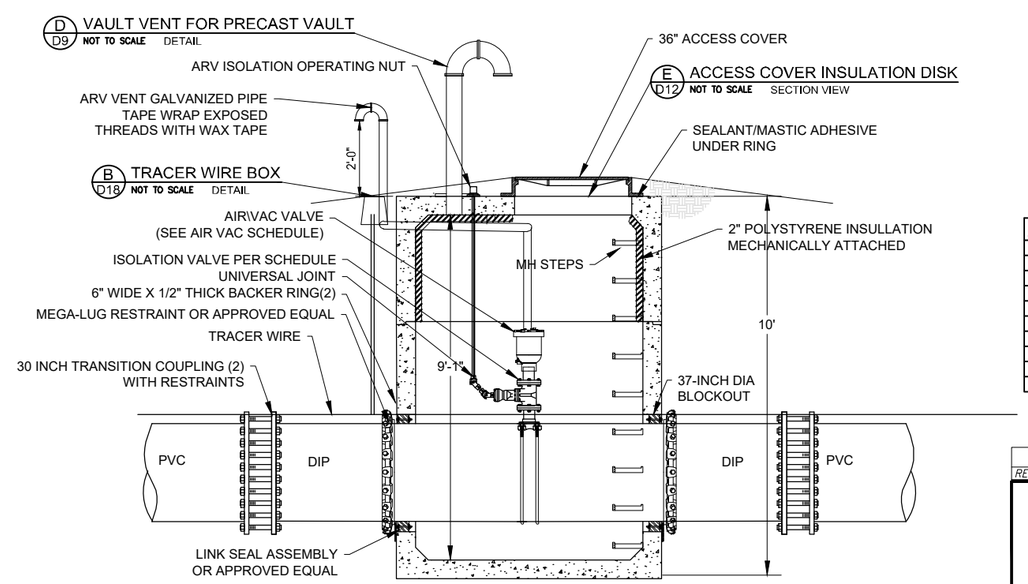

D ~ AIR/VAC ASSEMBLY (PVC)
NOT TO SCALE ELEVATION VIEW

AIR RELIEF VALVE SCHEDULE

STATION	VALVE SIZE
18+40	4"
62+50	4"
77+00	4"
84+30	3"
106+90	3"
113+90	3"
124+00	3"
145+50	3"
147+50	3"

REV NO.	COMMENT	DATE

SUNRISE ENGINEERING
770 S WASHINGTON ST.
AFTON, WYOMING 83110
TEL 307.885.8500 · FAX 307.885.8501
www.sunrise-eng.com

GR–RS–SC JPWB

CROSSROADS PUMP STATION
MANWAY/AIR VACUUM
DETAILS

SEI NO.	DESIGNED	DRAWN	CHECKED	SHEET NO.	
07265	FDK	BJ	JJL	88 of 99	D10

P:\WWDC GR-RS-SC JPWB Cross Roads Pump Station Level III (S07265)\Dwg C3D\Pump Station\Details\Pump Station Layout.dwg Feb 13, 2026 9:41am bjenkins

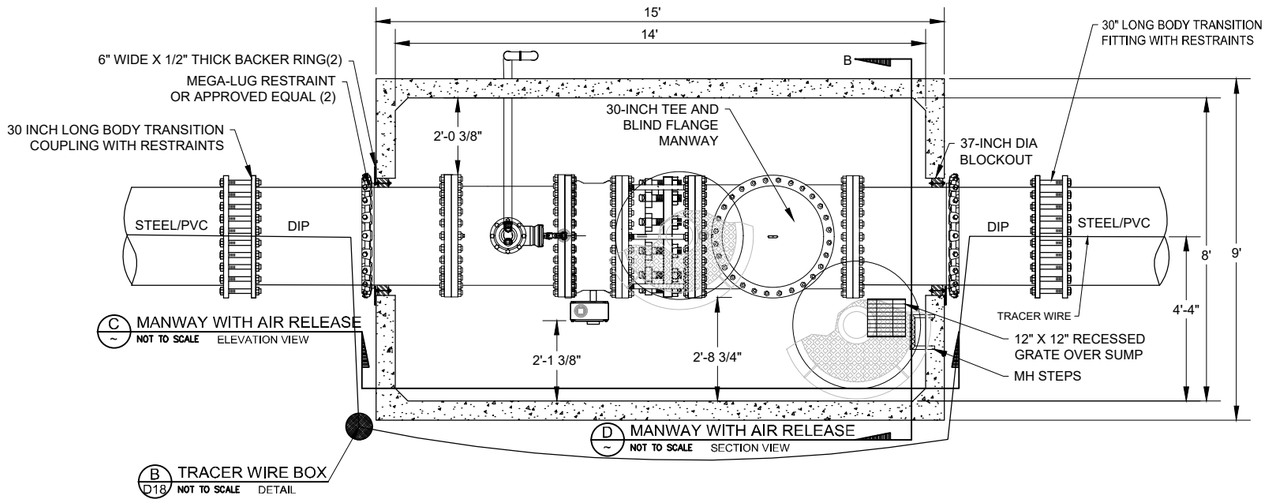

A MANWAY WITH AIR RELEASE VALVE
NOT TO SCALE PLAN VIEW

NOTE: ON STEEL PIPE SECTIONS, THE STEEL PIPE MAY BE EXTENDED TO THE TEE INSIDE THE VAULT TO A WELDED FLANGE SHIPPED LOOSE.

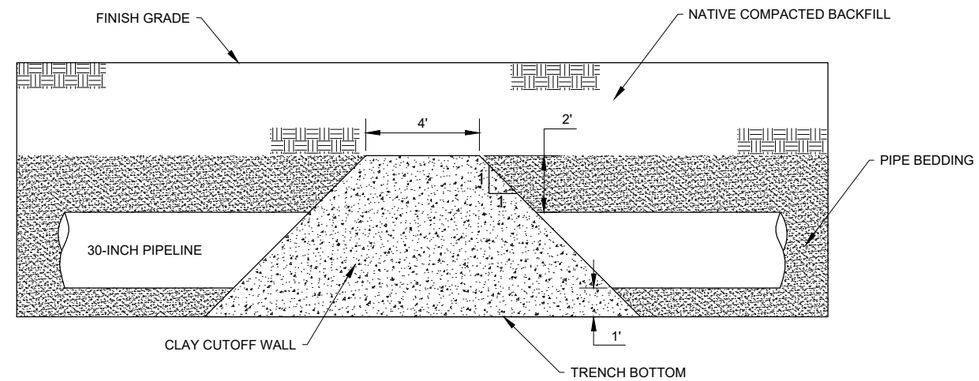

B CLAY CUT-OFF WALL
NOT TO SCALE ELEVATION VIEW

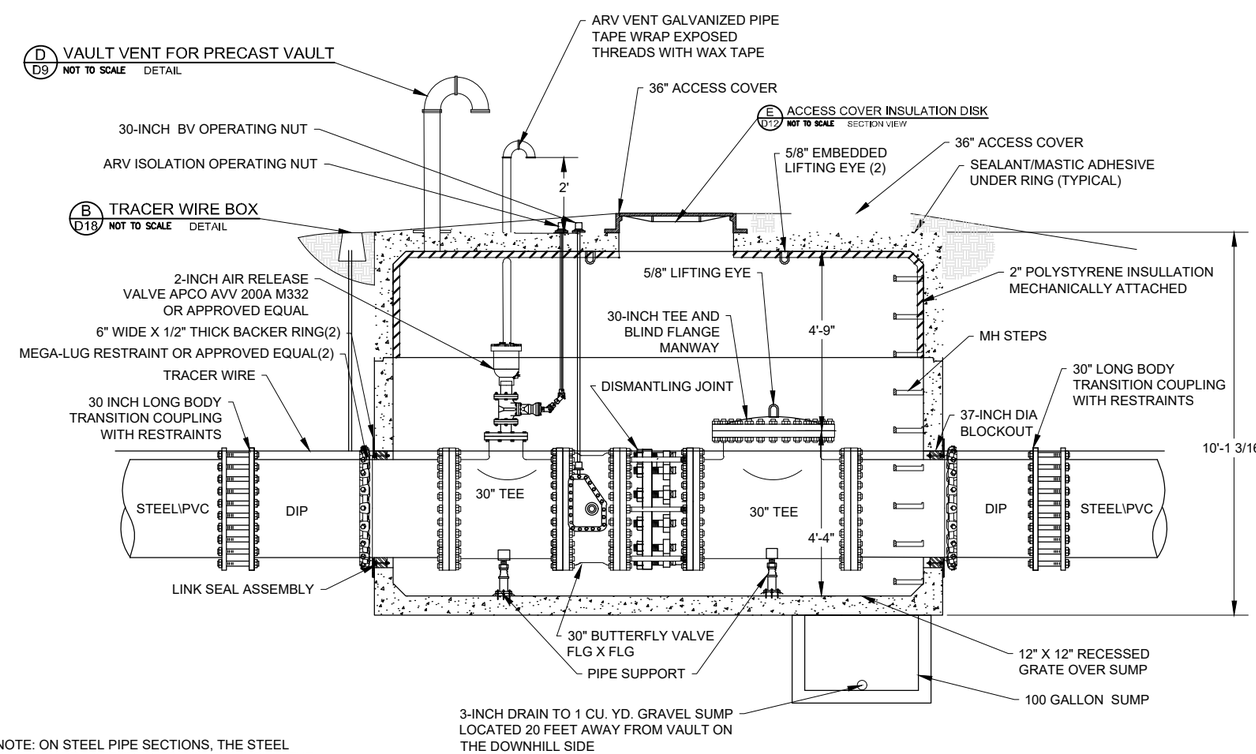

NOTE: ON STEEL PIPE SECTIONS, THE STEEL PIPE MAY BE EXTENDED TO THE TEE INSIDE THE VAULT TO A WELDED FLANGE SHIPPED LOOSE.

C MANWAY WITH AIR RELEASE VALVE
NOT TO SCALE ELEVATION VIEW

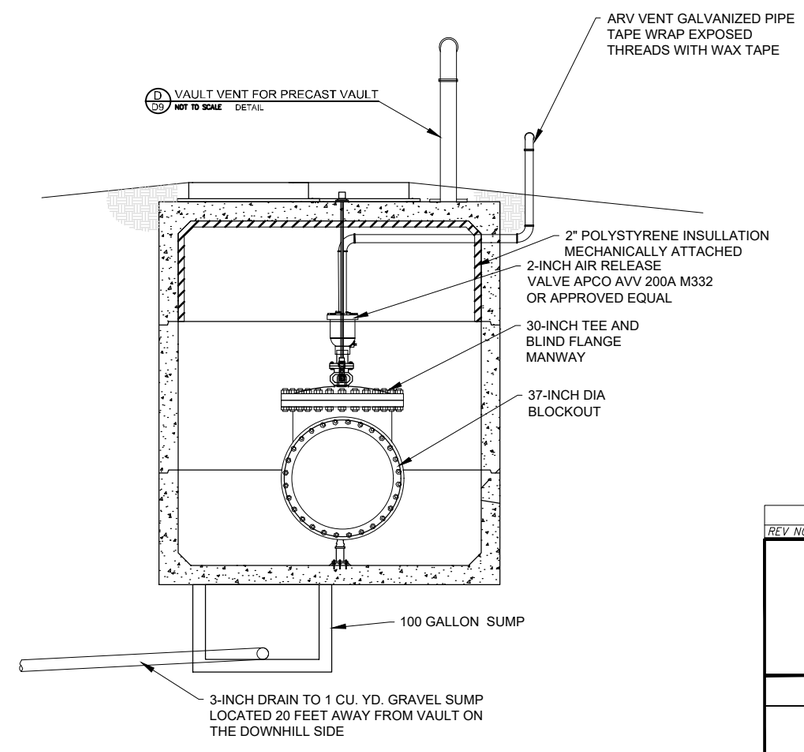

D MANWAY WITH AIR RELEASE VALVE
NOT TO SCALE SECTION VIEW

REV NO.	COMMENT	DATE

SUNRISE ENGINEERING
770 S WASHINGTON ST.
AFTON, WYOMING 83110
TEL 307.885.8500 · FAX 307.885.8501
www.sunrise-eng.com

GR-RS-SC JPWB

CROSSROADS PUMP STATION
MANWAY WITH ISOLATION VALVE
DETAILS

SEI NO.	DESIGNED	DRAWN	CHECKED	SHEET NO.	
07265	FDK	BJ	JJL	89 of 99	D11

P:\WMDC GR-RS-SC JPWB Cross Roads Pump Station Level III (S07265)\Dwg C3D\Pump Station\Details\Pump Station Layout.dwg Feb 13, 2026 9:41am bjenkins

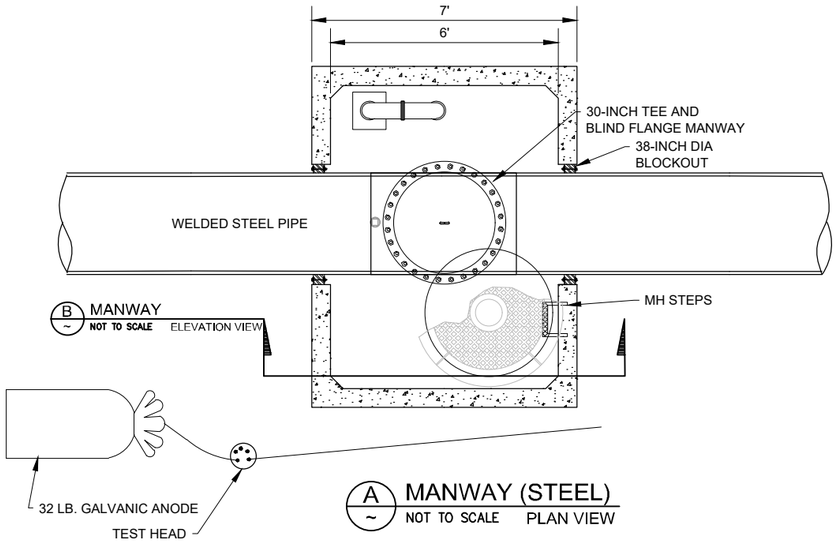

B ~ MANWAY
NOT TO SCALE ELEVATION VIEW

A ~ MANWAY (STEEL)
NOT TO SCALE PLAN VIEW

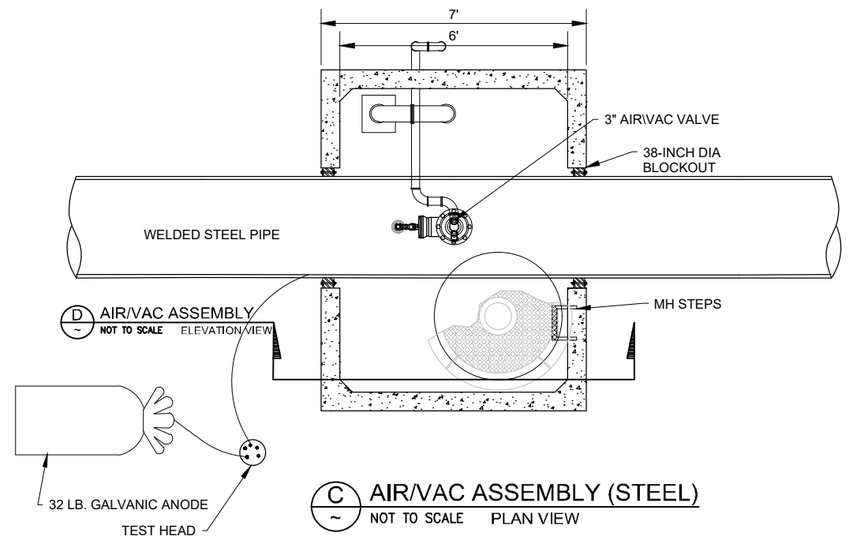

D ~ AIR/VAC ASSEMBLY
NOT TO SCALE ELEVATION VIEW

C ~ AIR/VAC ASSEMBLY (STEEL)
NOT TO SCALE PLAN VIEW

D D9 VAULT VENT FOR PRECAST VAULT
NOT TO SCALE DETAIL

E D12 ACCESS COVER INSULATION DISK
NOT TO SCALE SECTION VIEW

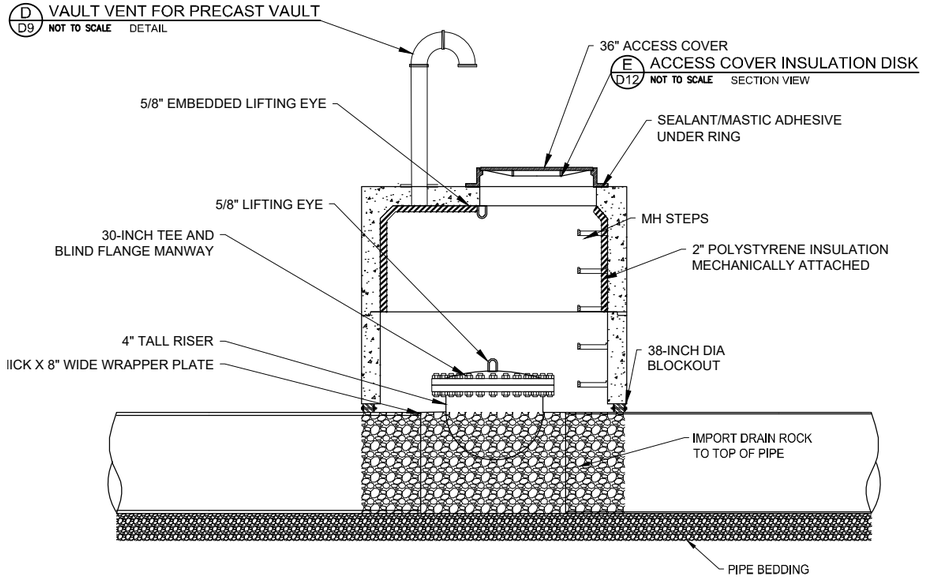

B ~ MANWAY (STEEL)
NOT TO SCALE ELEVATION VIEW

D D9 VAULT VENT FOR PRECAST VAULT
NOT TO SCALE DETAIL

E D12 ACCESS COVER INSULATION DISK
NOT TO SCALE SECTION VIEW

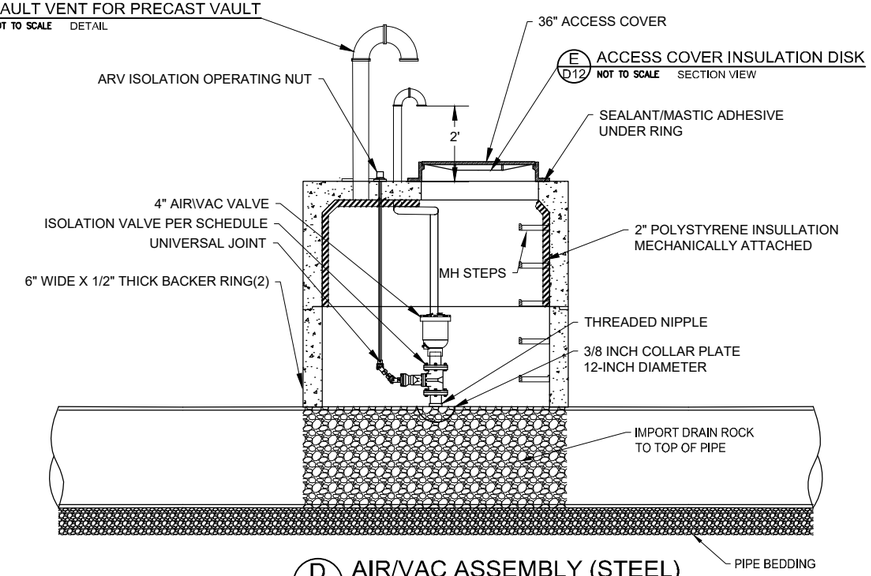

D ~ AIR/VAC ASSEMBLY (STEEL)
NOT TO SCALE ELEVATION VIEW

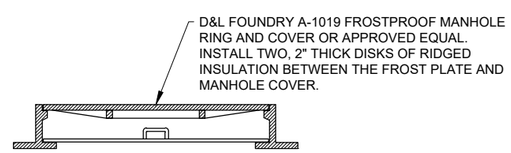

E ~ ACCESS COVER INSULATION DISK
NOT TO SCALE SECTION VIEW

REV NO.	COMMENT	DATE

SUNRISE ENGINEERING
770 S WASHINGTON ST.
AFTON, WYOMING 83110
TEL 307.885.8500 · FAX 307.885.8501
www.sunrise-eng.com

GR–RS–SC JPWB

CROSSROADS PUMP STATION

MANWAY AIR VAC DETAILS

SEI NO.	DESIGNED	DRAWN	CHECKED	SHEET NO.	
07265	FDK	BJ	JJL	90 of 99	D12

P:\WWDC GR-RS-SC JPWB Cross Roads Pump Station Level III (S07265)\Dwg C3D\Pump Station\Details\Pump Station Layout.dwg Feb 13, 2026 9:41am bjenkins

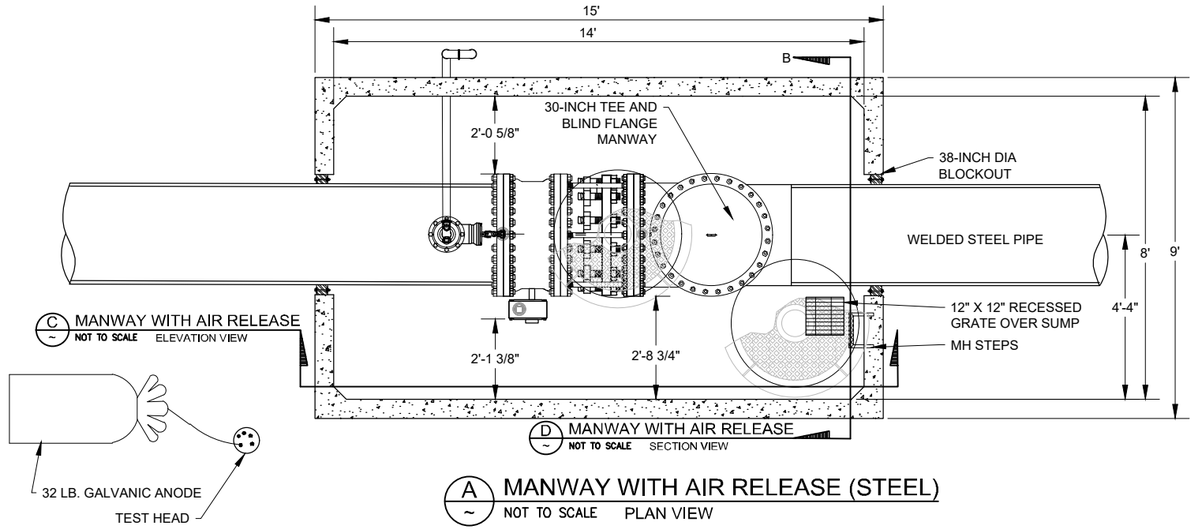

C MANWAY WITH AIR RELEASE
NOT TO SCALE ELEVATION VIEW

D MANWAY WITH AIR RELEASE
NOT TO SCALE SECTION VIEW

A MANWAY WITH AIR RELEASE (STEEL)
NOT TO SCALE PLAN VIEW

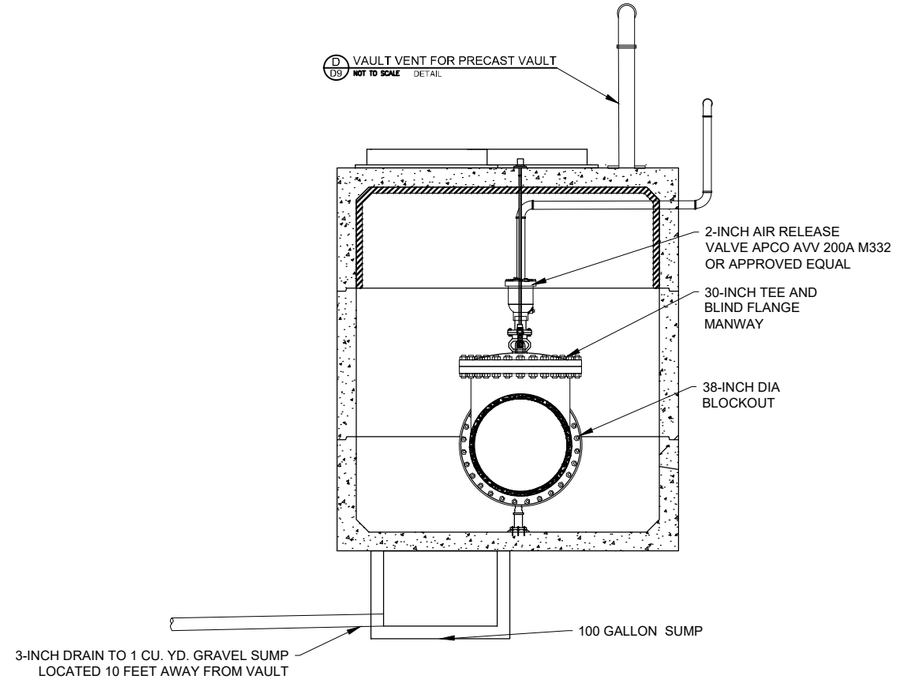

B MANWAY WITH AIR RELEASE (STEEL)
NOT TO SCALE SECTION VIEW

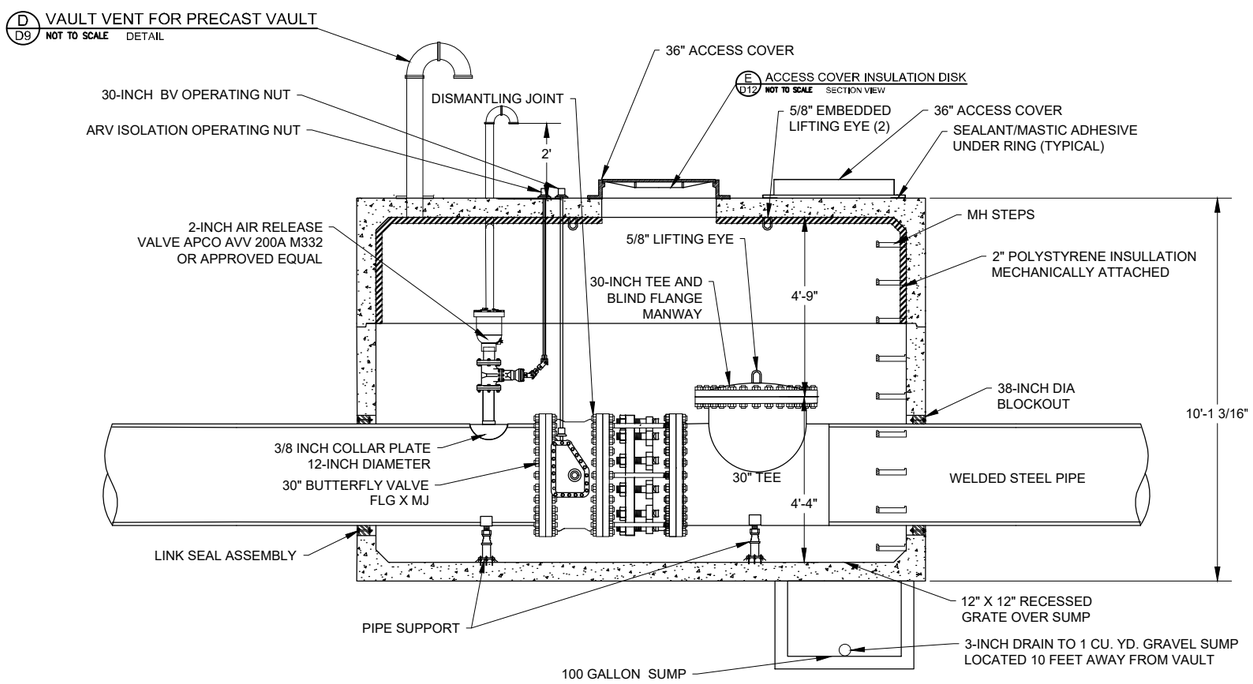

C MANWAY WITH AIR RELEASE (STEEL)
NOT TO SCALE ELEVATION VIEW

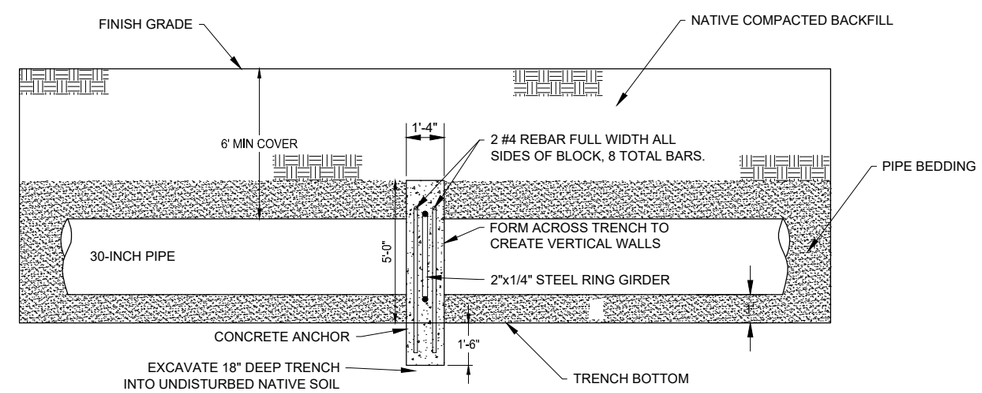

D CONCRETE PIPE ANCHOR
NOT TO SCALE DETAIL

REV NO.	COMMENT	DATE

SUNRISE ENGINEERING
770 S WASHINGTON ST.
AFTON, WYOMING 83110
TEL 307.885.8500 · FAX 307.885.8501
www.sunrise-eng.com

GR–RS–SC JPWB

CROSSROADS PUMP STATION

MANYWAY AIR VAC DETAILS

SEI NO.	DESIGNED	DRAWN	CHECKED	SHEET NO.	
07265	FDK	BJ	JJL	91 of 99	D13

P:\WWDC GR–RS–SC JPWB Cross Roads Pump Station Level III (S07265)\Dwg C3D\Pump Station\Details\Pump Station Layout.dwg Feb 13, 2026 9:42am bjenkins

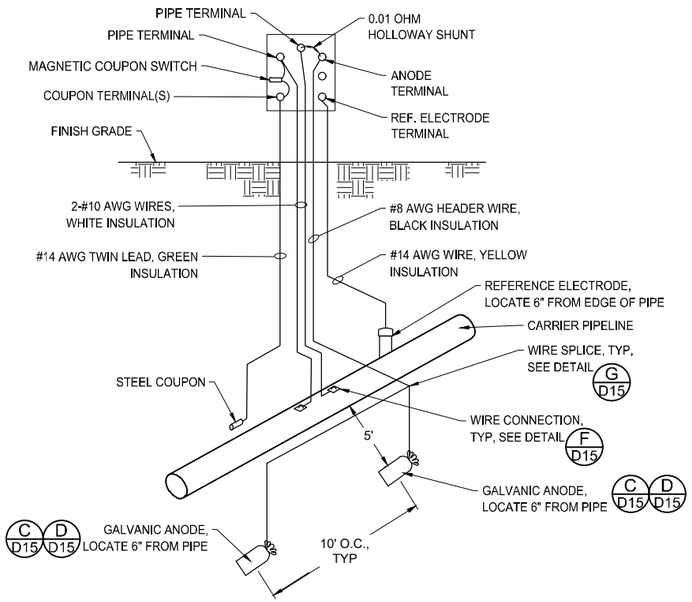

NOTES:
1. SEE APPLICABLE FLUSH OR POST TEST STATION DETAIL.
2. INSTALL AND LABEL EACH TEST LEAD IN TEST STATION.
3. NOT ALL TEST WIRES OR TERMINALS SHOWN FOR CLARITY. FOR TERMINAL BOARD LAYOUT, SEE DETAIL. E D15

A TEST STATION
NOT TO SCALE DETAIL

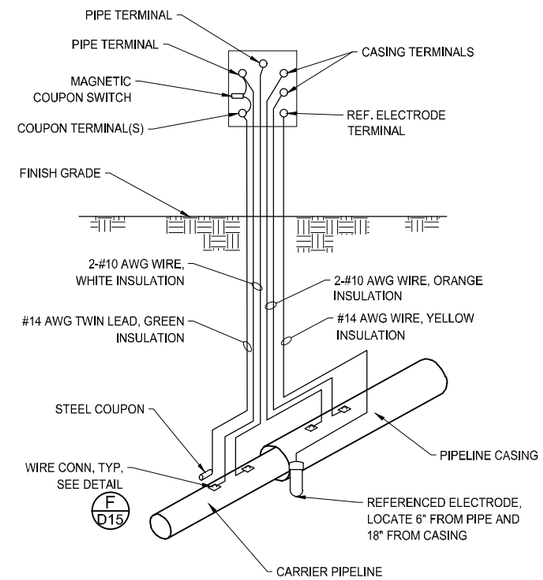

NOTES:
1. SEE APPLICABLE FLUSH OR POST TEST STATION DETAIL.
2. INSTALL AND LABEL EACH TEST LEAD IN TEST STATION.
3. NOT ALL TEST WIRES SHOWN FOR CLARITY. FOR TERMINAL BOARD LAYOUT, SEE DETAIL E D15

B TEST STATION
NOT TO SCALE DETAIL

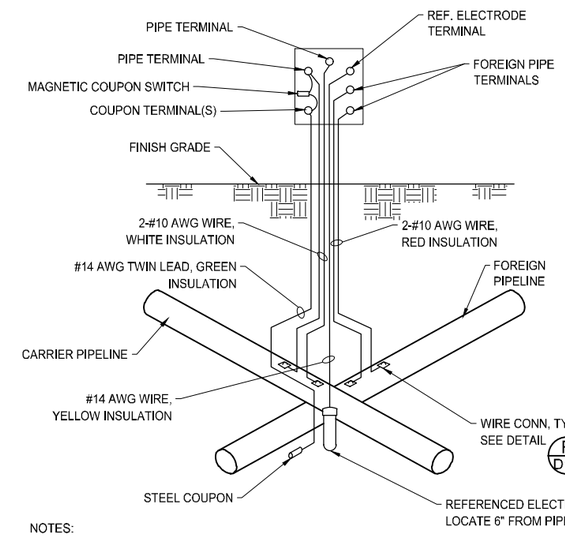

NOTES:
1. PRIOR TO MAKING WIRE CONNECTIONS CONTACT FOREIGN PIPELINE OWNER FOR APPROVAL.
2. SEE POST OR FLUSH MOUNTED TEST STATION DETAILS AS APPLICABLE FOR TEST STATION STYLE REQUIRED.
3. NOT ALL TEST WIRES OR TERMINALS SHOWN FOR CLARITY. FOR TERMINAL BOARD LAYOUT, SEE DETAIL E D15

C TEST STATION
NOT TO SCALE DETAIL

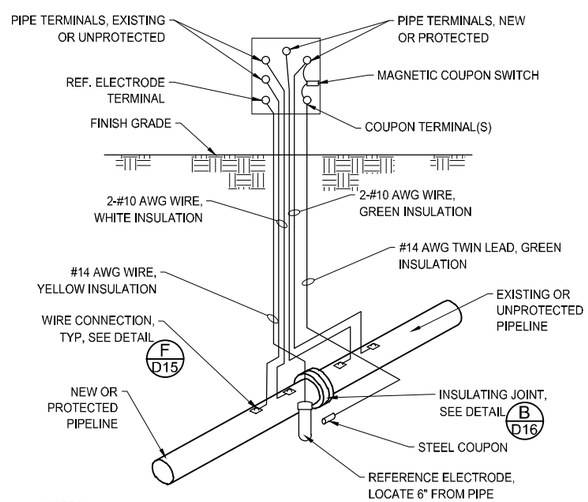

NOTES:
1. SEE APPLICABLE FLUSH OR POST TEST STATION DETAIL.
2. INSTALL AND LABEL EACH TEST LEAD IN TEST STATION.
3. NOT ALL TEST WIRES OR TERMINALS SHOWN FOR CLARITY. FOR TERMINAL BOARD LAYOUT, SEE DETAIL E D15

D TEST STATION
NOT TO SCALE DETAIL

CATHODIC PROTECTION TEST STATION SCHEDULE

CTS#	STATION	TYPE	STYLE	NUMBER AND BARE WEIGHT OF HIGH POTENTIAL MAGNESIUM ANODES	REMARKS
1	0+00	DETAIL A	FLUSH	4 - 60 LB.	INSTALL TEST STATION AT NEW 30' STEEL TEE
2	18+00	DETAIL A	FLUSH	4 - 60 LB.	INSTALL TEST STATION AT BEND
3	24+00	DETAIL B	FLUSH	4 - 60 LB.	INSTALL TEST STATION AT SOUTH END OF CASING
4	25+40	DETAIL B	FLUSH	4 - 60 LB.	INSTALL TEST STATION AT SOUTH END OF CASING
5	28+50	DETAIL B	FLUSH	4 - 60 LB.	INSTALL TEST STATION AT SOUTH END OF CASING
6	29+10	DETAIL C	FLUSH	2 -60 LB.	INSTALL TEST STATION AT GAS PIPELINE CROSSING
7	32+60	DETAIL C	FLUSH	2 -60 LB.	INSTALL TEST STATION AT
8	36+55	DETAIL A	FLUSH	2 -60 LB.	INSTALL TEST STATION AT END OF STEEL
9	37+40	DETAIL A	FLUSH	2 -60 LB.	INSTALL TEST STATION AT
10	42+65	DETAIL C	FLUSH	2 -60 LB.	INSTALL TEST STATION AT GAS PIPELINE CROSSING
11	49+00	DETAIL A	FLUSH	2 -60 LB.	INSTALL TEST STATION AT CENTER OF STEEL
12	60+00 TO 146+00	DETAIL A	FLUSH	1 -60 LB.	INSTALL TEST STATION AT ALL DUCTILE FITTINGS
13	111+37	DETAIL C	FLUSH	2 -60 LB.	INSTALL TEST STATION AT WATER PIPELINE CROSSING
14	0+00 TO 146+00	DETAIL A	FLUSH	1 - 60 LB.	INSTALL TEST STATION AT EACH MANWAY

REV NO.	COMMENT	DATE

SUNRISE ENGINEERING
770 S WASHINGTON ST.
AFTON, WYOMING 83110
TEL 307.885.8500 · FAX 307.885.8501
www.sunrise-eng.com

GR-RS-SC JPWB

CROSSROADS PUMP STATION

CATHODIC PROTECTION DETAILS

SEI NO.	DESIGNED	DRAWN	CHECKED	SHEET NO.	
07265	FDK	BJ	JJL	92 of 99	D14

P:\WWDC GR-RS-SC JPWB Cross Roads Pump Station Level III (S07265)\Dwg C3D\Civil\Waterline\Details\Details.dwg Feb 13, 2026 9:42am bjenkins

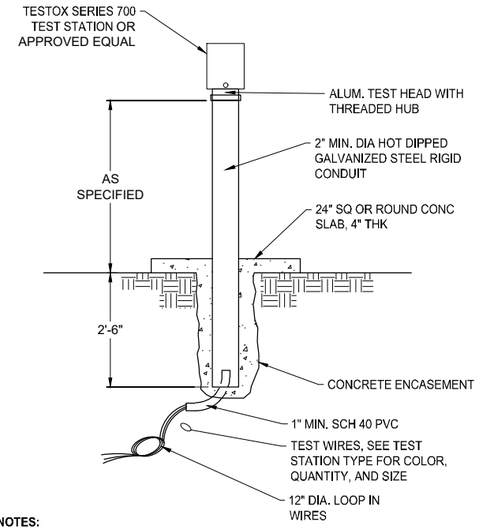

NOTES:

1. QUANTITY OF TERMINALS AND WIRING CONNECTIONS VARIES, SEE APPLICABLE TEST STATION DETAILS FOR TYPE OF TEST STATION.
2. PROVIDE WIRE LOOP AT BASE OF POST MOUNTED TEST STATION.
3. TO MINIMIZE SETTLEMENT STRESSES ON WIRE.
4. INSTALL TESTOX SERIES 700 TEST STATION OR APPROVED EQUAL UNLESS SPECIFIED OTHERWISE.
5. CORROSION RESISTANT TAPE WRAP TO BE APPLIED TO BURIED SECTION OF GALVANIZED STEEL POST. EXTEND TAPE TO 6" ABOVE GROUND.

A ~ GALVANIZED STEEL POST

NOT TO SCALE DETAIL

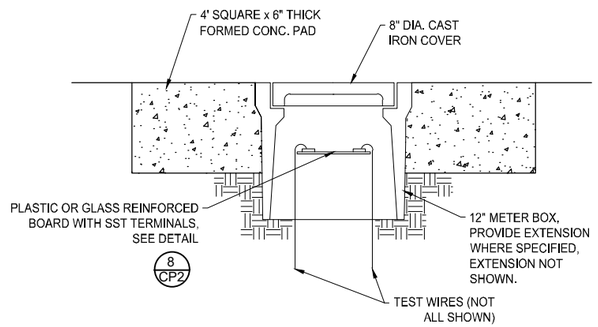

NOTES:

1. COLOR CODE WIRE INSULATION AS SHOWN IN APPLICABLE TEST STATION DETAILS, CONNECT EACH TEST WIRE TO SEPARATE TERMINAL.
2. WIRE CONFIGURATION FOR FLUSH MOUNTED TEST STATIONS SIMILAR TO POST MOUNTED TEST STATIONS.
3. PROVIDE 18 INCHES SLACK IN TEST WIRES, MINIMUM

B ~ FLUSH MOUNT TEST STATION BOX

NOT TO SCALE DETAIL

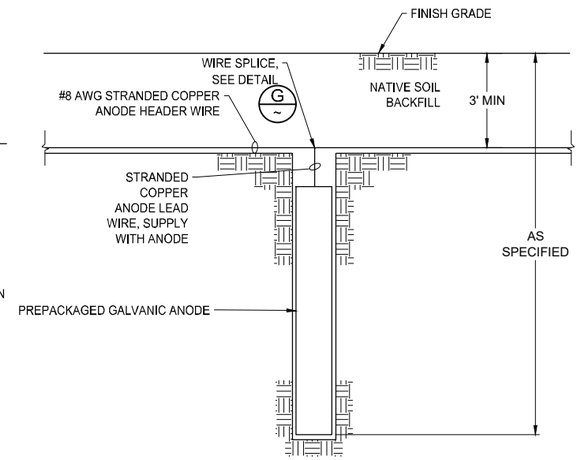

C ~ GALVANIC ANODE VERTICAL INSTALLATION

NOT TO SCALE DETAIL

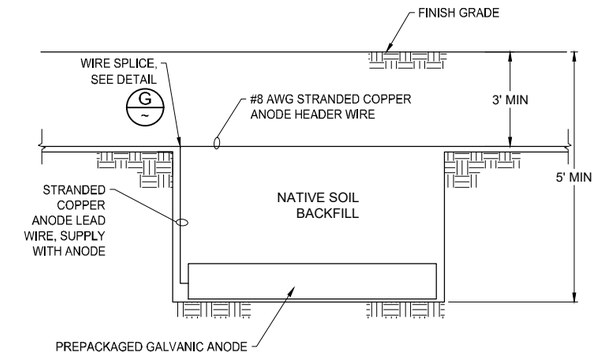

NOTES:

1. ANODES TO BE INSTALLED HORIZONTALLY UNLESS SPECIFIED OTHERWISE.
2. ANODES INCLUDE AN ATTACHED LEAD WIRE FOR INSTALLATION.
3. REMOVE ANODE FROM PLASTIC BEFORE INSTALLATION.
4. ENSURE ANODES ARE NOT IN CONTACT WITH ANY OTHER BELOW GRADE STRUCTURES. AFTER ANODE INSTALLATION, BACKFILL TO 1-FOOT OVER THE ANODES, WATER ANODES WITH 5 GALLONS OF WATER PER ANODE, IF SOILS ARE DRY AS DETERMINED BY THE ENGINEER.
5. WHEN POSSIBLE, PLACE ANODES WITHIN MOIST LOAM AND CLAY SOIL. AVOID PLACEMENT OF ANODES WITHIN DRY SAND AND DO NOT PLACE WITHIN GRAVEL.

D ~ GALVANIC ANODE HORIZONTAL INSTALLATION

NOT TO SCALE DETAIL

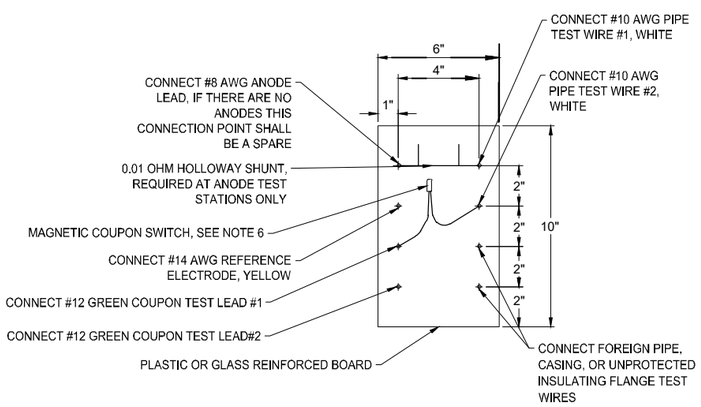

NOTES:

1. TERMINAL BOARD LAYOUT FOR REFERENCE ONLY AND MAY BE DIFFERENT ON PHYSICAL BOARD.
2. TERMINALS SHALL BE 1/4" STAINLESS STEEL WITH LOCKING WASHER, TWO FLAT WASHERS, AND DOUBLE NUTS.
3. ALL WIRE CONNECTIONS TO BE WITH RING TONGUE COMPRESSION TERMINALS.
4. INSTALL AND LABEL EACH TEST LEAD IN TEST STATION.
5. TEST WIRES NOT SHOWN FOR CLARITY.
6. ONE (1) COUPON TO BE INSTALLED,OR AS SPECIFIED BY ENGINEER, WITH MAGNETIC COUPON. SWITCH INSTALLED BETWEEN ONE (1) COUPON TEST LEAD AND ONE (1) PIPE TEST LEAD.

E ~ TERMINAL BOARD LAYOUT

NOT TO SCALE DETAIL

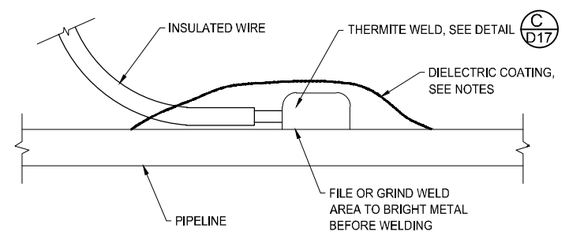

NOTES:

1. COPPER SLEEVE REQUIRED FOR #2 AWG JOINT BONDS OR FOR #12 AWG OR SMALLER TEST WIRES.
2. WELDER AND CARTRIDGE SIZE VARIES ACCORDING TO PIPE SIZE AND PIPE MATERIAL, CONSULT WELDER MANUFACTURER FOR RECOMMENDED WELDER AND CARTRIDGE.
3. COAT ALL THERMITE WELDS, PIPE, AND EXPOSED COPPER WIRE WITH DENSO PROTAL (7125, 7200, 7300) OR APPROVED EQUAL OR COATING SYSTEM AS SPECIFIED.
4. PIPELINE COATING NOT SHOWN FOR CLARITY.

F ~ STEEL & DUCTILE IRON PIPE WIRE CONNECTION

NOT TO SCALE DETAIL

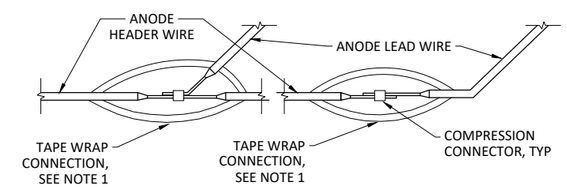

NOTES:

1. SCOTCHCAST 90-B1 SPICE KIT OR APPROVED EQUAL TO BE USED FOR ANODE LEAD WIRE TO ANODE HEADER WIRE SPLICE.
2. FILL VOIDS AND IRREGULARITIES WITH INSULATING PUTTY, WRAP CONNECTION WITH TWO LAYERS OF SCOTCH 130C SELF VULCANIZING RUBBER TAPE OR APPROVED EQUAL AND TWO LAYERS OF SCOTCH 88 VINYL ELECTRICAL TAPE, OR APPROVED EQUAL.
3. DETAIL SIMILAR FOR ANODE HEADER WIRE SPLICES, SIZE COMPRESSION CONNECTORS AS REQUIRED.

G ~ GALVANIC ANODE WIRE SPLICES

NOT TO SCALE DETAIL

REV NO.	COMMENT	DATE

SUNRISE ENGINEERING
770 S WASHINGTON ST.
AFTON, WYOMING 83110
TEL 307.885.8500 · FAX 307.885.8501
www.sunrise-eng.com

GR-RS-SC JPWB

CROSSROADS PUMP STATION

CATHODIC PROTECTION DETAILS

SEI NO.	DESIGNED	DRAWN	CHECKED	SHEET NO.	
07265	FDK	BJ	JJL	93 of 99	D15

P:\WWDC GR-RS-SC JPWB Cross Roads Pump Station Level III (S07265)\Dwg C3D\Civil\Waterline\Details\Details.dwg Feb 13, 2026 9:42am bjenkins

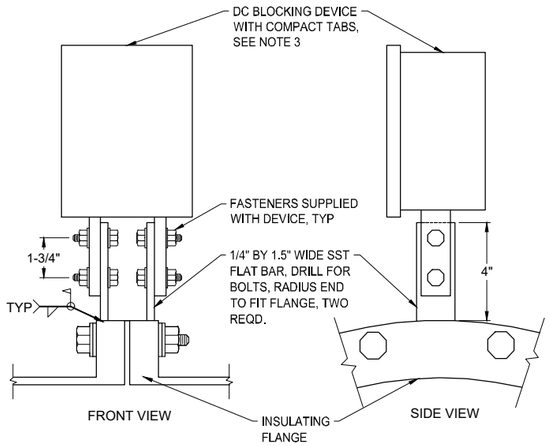

NOTES:
1. DO NOT COAT MOUNTING PLATES, FASTENERS, OR DEVICE TABS AFTER ASSEMBLY, CLEAN AND COAT WELD ONLY.
2. NEGATIVE TAB OF DC BLOCKING DEVICE TO BE ON CATHODICALLY PROTECTED SIDE OF INSULATING FLANGE.
3. COMPACT TABS ON BLOCKING DEVICE SHOWN FOR TOP MOUNTING, USE STANDARD TABS FOR MOUNTING AT PIPE SPRINGLINE.

A DC BLOCKING DEVICE FLANGE MOUNT
NOT TO SCALE DETAIL

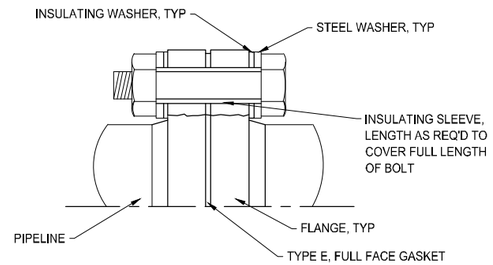

NOTES:
1. DOUBLE INSULATING WASHERS SHOWN FOR NON-BURIED INSULATING FLANGE INSTALLATIONS.
2. FOR BURIED OR SUBMERGED INSULATING FLANGE INSTALLATION USE SINGLE INSULATING WASHER ON UNPROTECTED SIDE OF INSULATING FLANGE.
3. COAT INTERIOR OF MORTAR LINED PIPE FOR TWO PIPE DIAMETERS WITH NSF APPROVED EPOXY AT 20 MILS DFT.
4. COAT BURIED OR IMMERSED INSULATING FLANGES WITH SPECIFIED PIPELINE DIELECTRIC JOINT COATING OR HEAT SHRINK SLEEVE WITH MORTAR OVERCOAT ON MLC STEEL PIPE.
5. TEST COMPLETED JOINT FOR ELECTRICAL ISOLATION AND REPAIR AS REQUIRED.

B EXOTHERMIC WELD PROCEDURE
NOT TO SCALE DETAIL

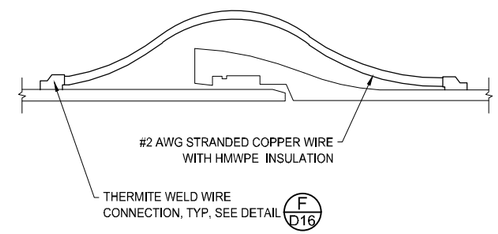

NOTES:
1. PUSH ON DUCTILE IRON BOND SHOWN, SIMILAR FOR DUCTILE MECHANICAL AND RESTRAINED JOINTS, AND STEEL CARNEGIE JOINTS.
2. INSTALL TWO (2) BOND WIRES PER JOINT OR AS SPECIFIED FOR PIPE DIAMETER AND MATERIAL.
3. COAT ALL THERMITE WELDS, PIPE, AND EXPOSED COPPER WIRE WITH DENSO 3, PROTAL (7125, 7200, 7300) OR APPROVED EQUAL OR COATING SYSTEM AS SPECIFIED.
4. PIPELINE COATING NOT SHOWN FOR CLARITY.

C DUCTILE IRON JOINT BOND
NOT TO SCALE DETAIL

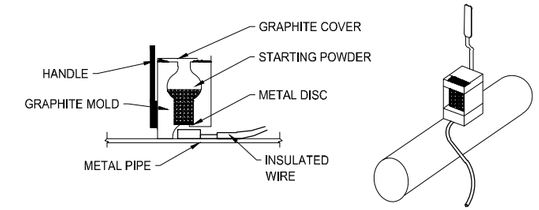

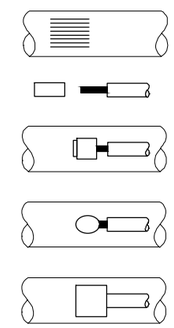

STEP 1 FILE STRUCTURE CONNECTION AREA (3IN X 3IN) TO BARE SHINY METAL AND CLEAN.

STEP 2 STRIP INSULATION FROM WIRE.

STEP 3 HOLD MOLD FIRMLY WITH OPENING AWAY FROM OPERATOR AND IGNITE WITH STRIKER.

STEP 4 REMOVE SLAG FROM CONNECTION AND PEEN WELD FOR SOUNDNESS.

STEP 5 COVER CONNECTION AND EXPOSED STRUCTURE SURFACE WITH A WITH DIELECTRIC COATING AS SPECIFIED.

EXOTHERMIC WELD NOTES:
1. ONE WELD SHALL BE USED FOR EACH.
2. CLEAN OILY OR GREASY CABLE WITH A RAPID-DRYING SOLVENT. REMOVE. ONLY ENOUGH INSULATION FROM THE CABLE TO ALLOW THE EXOTHERMIC WELD CONNECTION TO BE MADE.
3. REMOVE ALL COATING, DIRT, GRIME, AND GREASE FROM THE METAL AT WELD LOCATIONS BY WIRE BRUSHING AND/OR USE OF SOLVENTS. CLEAN THE BASE METAL TO A BRIGHT, SHINY SURFACE. THE AREA OF THE BASE METAL WHERE THE ATTACHMENT IS TO BE MADE MUST BE DRY.
4. OPEN WELD MOLD AND PLACE METAL DISC INSIDE AT BOTTOM OF MOLD, POUR METAL WELDING POWDER INTO MOLD AND ON TOP OF METAL DISC. STARTING POWDER IS CAKED AT THE BOTTOM OF THE WELD CHARGE CONTAINER. TAP WELD CHARGE CONTAINER AND POUR HALF OF STARTING POWDER INTO WELD MOLD. CLOSE THE TOP OF WELD MOLD AND POUR THE REMAINING STARTING POWDER IN STRIKING HOLE. THE WELD MOLD IS NOW LOADED AND READY FOR USE.
5. PROVIDE PREFABRICATED FACTORY SLEEVES WHERE REQUIRED BY THERMITE 5. WELDING MANUFACTURER.
6. THE LEAD WIRE IS TO BE HELD AT AN ANGLE TO THE SURFACE WHEN WELDING. ONLY ONE WIRE SHALL BE ATTACHED WITH EACH WELD. HOLD LOADED WELD MOLD FIRMLY ON PIPE AND WIRE. IGNITE STARTING POWDER IN STRIKING HOLE USING A STRIKER. HOLD WELD MOLD FIRMLY AGAINST PIPE FOR 5 SECONDS TO ALLOW FOR WELD PROCESS.
7. WELDS SHALL BE TESTED BY STRIKING THE WELD NUGGET WITH A TWO POUND HAMMER WHILE PULLING FIRMLY ON THE WIRE. ALL UNSOUND WELDS SHALL BE REMOVED, THE SURFACES RECLEANED, REWELDED, AND RETESTED. WELD SLAG SHALL BE REMOVED.
8. APPLY DIELECTRIC COATING AS SHOWN AND SPECIFIED TO WELD AND ALL EXPOSED AREAS SURROUNDING WELD.

G EXOTHERMIC WELD PROCEDURE
NOT TO SCALE DETAIL

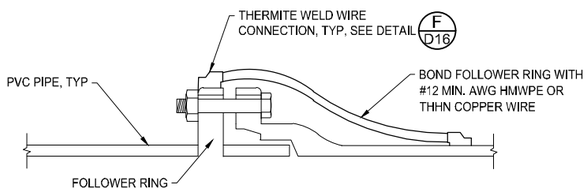

D MECHANICAL JOINT BOND WITH FOLLOWER RING
NOT TO SCALE DETAIL

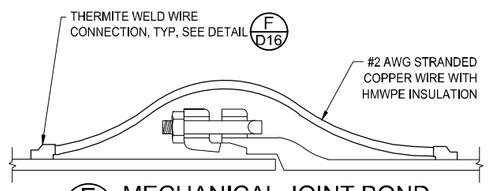

E MECHANICAL JOINT BOND
NOT TO SCALE DETAIL

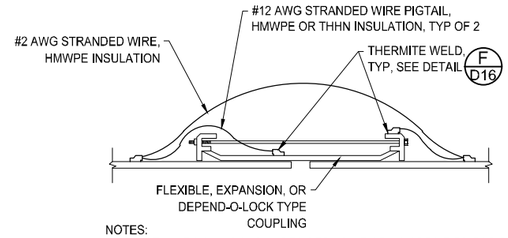

NOTES:
1. INSTALL TWO (2) BOND WIRES PER JOINT OR AS SPECIFIED FOR PIPE DIAMETER AND MATERIAL.
2. COAT ALL THERMITE WELDS, PIPE, AND EXPOSED COPPER WIRE WITH DENSO PROTAL (7125, 7200, 7300) OR APPROVED EQUAL OR COATING SYSTEM AS SPECIFIED.
3. PIPELINE COATING NOT SHOWN FOR CLARITY.

F FLEXIBLE JOINT BOND
NOT TO SCALE DETAIL

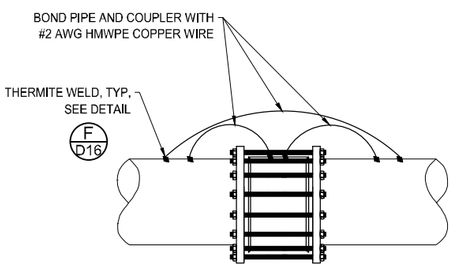

H COUPLER BOND
NOT TO SCALE DETAIL

NOTES:
1. INSTALL TWO (2) BOND WIRES PER JOINT OR AS SPECIFIED FOR PIPE DIAMETER AND MATERIAL.
2. COAT ALL THERMITE WELDS, PIPE, AND EXPOSED COPPER WIRE WITH DENSO PROTAL (7125, 7200, 7300) OR COATING SYSTEM AS SPECIFIED.
3. PIPELINE COATING NOT SHOWN FOR CLARITY.

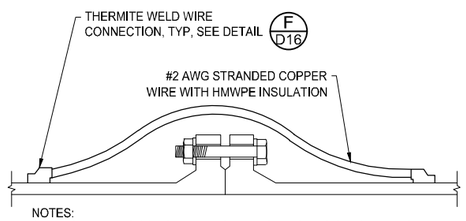

NOTES:
1. INSTALL TWO (2) BOND WIRES PER JOINT OR AS SPECIFIED FOR PIPE DIAMETER AND MATERIAL.
2. COAT ALL THERMITE WELDS, PIPE, AND EXPOSED COPPER WIRE 2. WITH DENSO PROTAL (7125, 7200, 7300) OR APPROVED EQUAL OR COATING SYSTEM AS SPECIFIED.
3. PIPELINE COATING NOT SHOWN FOR CLARITY.

I FLANGDED JOINT BOND
NOT TO SCALE DETAIL

REV NO.	COMMENT	DATE

SUNRISE ENGINEERING
770 S WASHINGTON ST.
AFTON, WYOMING 83110
TEL 307.885.8500 · FAX 307.885.8501
www.sunrise-eng.com

GR-RS-SC JPWB

CROSSROADS PUMP STATION

CATHODIC PROTECTION DETAILS

SEI NO.	DESIGNED	DRAWN	CHECKED	SHEET NO.	
07265	FDK	BJ	JJL	94 of 99	D16

P:\WWDC GR-RS-SC JPWB Cross Roads Pump Station Level III (S07265)\Dwg C3D\Civil\Waterline\Details\Details.dwg Feb 13, 2026 9:42am bjenkins

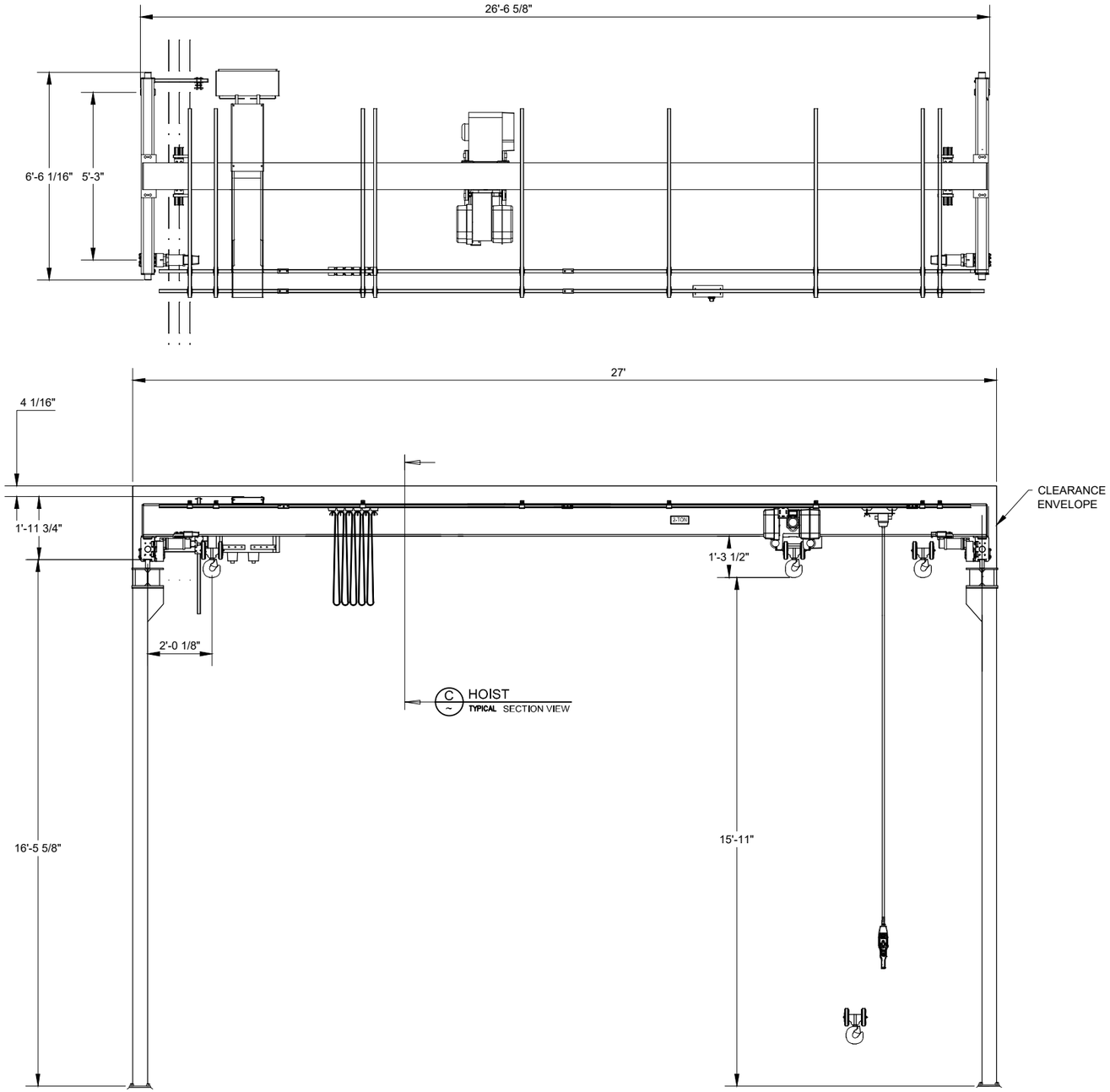

C HOIST
TYPICAL SECTION VIEW

A HOIST
TYPICAL ELEVATION VIEW

TECHNICAL DATA	SURFACE TREATMENT OF CRANE
SPAN: 27'-0"	BRIDGE COLOR : Safety Yellow
LOAD: 2-TON	PAINT : A/127 µm
LIFTING HEIGHT: 16'-0"	
HOISTING SPEED: 20.0/3.2 ft/min 2-Speed	
TRAVERSING SPEED: 65 ft/min Stepless	
TRAVELING SPEED: 100 ft/min Stepless	
WEIGHT OF TROLLEY: 480 lbs.	CUSTOMER ORGANIZES SAFE
WEIGHT OF BRIDGE: 2870lbs.	PLATFORM FOR CRANE SERVICE
CRANE CLASSIFICATION: CMAA Class C	
HOIST GROUP: ASME H4	
CRANE DRIVE GROUP: CMAA C	Indoor Use crane
MAIN/CONTROL VOLTAGE: 460/ 115 V; 60Hz	
SUPPLY POWER: 4.11 Hp	
LENGTH OF RUNWAY: 45'	

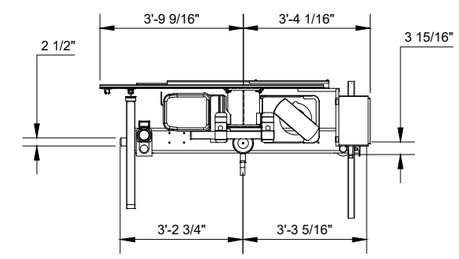

B HOIST
TYPICAL SECTION VIEW

REV NO.	COMMENT	DATE

SUNRISE ENGINEERING
770 S WASHINGTON ST.
AFTON, WYOMING 83110
TEL 307.885.8500 · FAX 307.885.8501
www.sunrise-eng.com

GR-RS-SC JPWB

CROSSROADS PUMP STATION

PUMP STATION HOIST DETAILS

SEI NO.	DESIGNED	DRAWN	CHECKED	SHEET NO.	
07265	FDK	BJ	JJL	95 of 99	D17

P:\WWDC GR-RS-SC JPWB Cross Roads Pump Station Level III (S07265)\Dwg C3D\Pump Station\Details\Pump Station Layout.dwg Feb 13, 2026 9:42am bjenkins

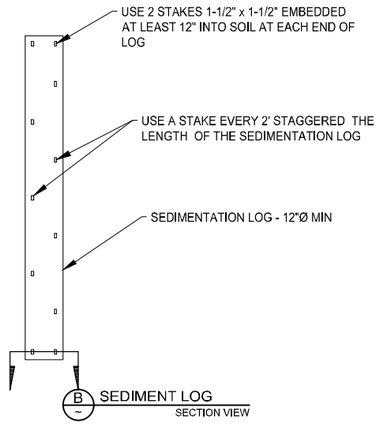

A SEDIMENT LOG
NOT TO SCALE PLAN VIEW

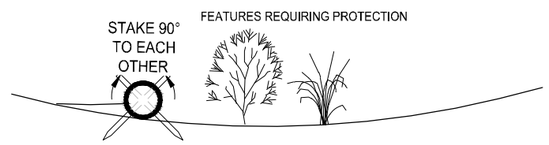

B SEDIMENT/WATTLE LOG
NOT TO SCALE SECTION VIEW

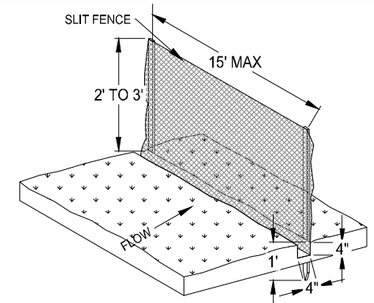

C SILT FENCE

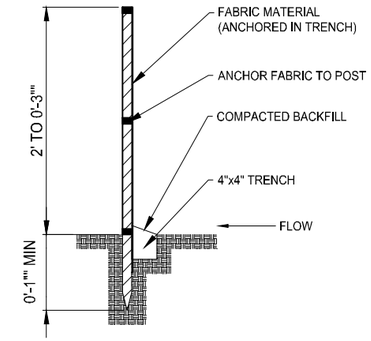

D SILT FENCE
NOT TO SCALE SECTION VIEW

SEDIMENT CONTROL LOG INSTALLATION NOTES:

1. SEE PLAN VIEW FOR LOCATION AND LENGTH OF SEDIMENT CONTROL LOG.
2. SEDIMENT CONTROL LOGS INDICATED ON INITIAL SWMP PLAN SHALL BE INSTALLED PRIOR TO ANY LAND DISTURBING ACTIVITIES.
3. SEDIMENT CONTROL LOGS SHALL CONSIST OF STRAW, COMPOST, EXCELSIOR, OR COCONUT FIBER.
4. NOT FOR USE IN CONCENTRATED FLOW AREAS.
5. THE SEDIMENT CONTROL LOG SHALL BE TRENCHED INTO THE GROUND A MINIMUM OF 2".

SEDIMENT CONTROL LOG MAINTENANCE NOTES:

1. THE SWMP MANAGER SHALL INSPECT SEDIMENT CONTROL LOGS DAILY, DURING AND AFTER ANY STORM.
2. SEDIMENT ACCUMULATED UPSTREAM OF SEDIMENT CONTROL LOGS SHALL BE REMOVED WHEN THE UPSTREAM SEDIMENT DEPTH IS WITHIN 1/2 THE HEIGHT OF THE CREST OF LOG.

NOTE: EROSION CONTROL MEASURES SHALL BE MAINTAINED UNTIL LANDSCAPING IS COMPLETED, OR AS DIRECTED BY LOCAL JURISDICTION

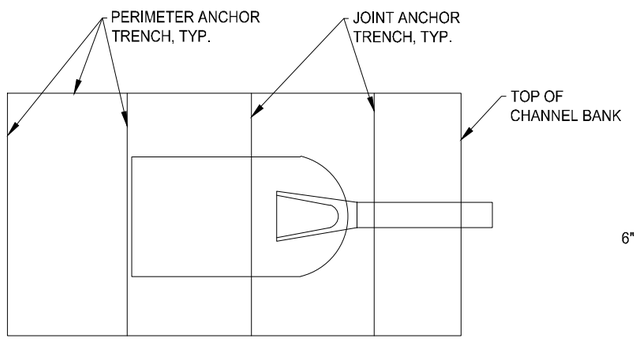

E EROSION BLANKET AT PIPE OUTLET
NOT TO SCALE PLAN VIEW

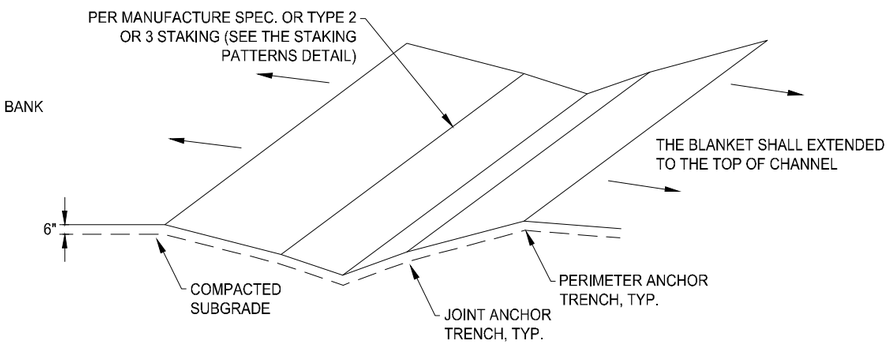

F EROSION BLANKET INSIDE SMALL DRAINAGE WAY
NOT TO SCALE DETAIL

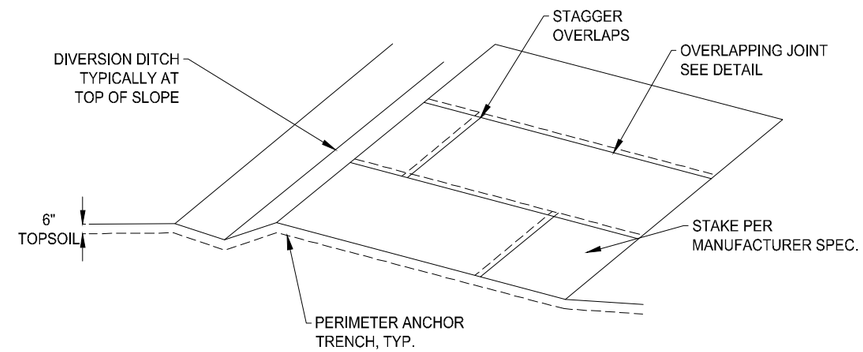

G EROSION BLANKET OUTSIDE OF DRAINAGE CHANNELS
NOT TO SCALE DETAIL

EROSION CONTROL BLANKET MAINTENANCE NOTES:

1. THE SWMP MANAGER SHALL INSPECT EROSION CONTROL BLANKET WEEKLY, DURING AND AFTER ANY STORM EVENT AND MAKE REPAIRS AS NEEDED.
2. EROSION CONTROL BLANKET IS TO BE LEFT IN PLACE UNLESS REQUESTED TO BE REMOVED BY LOCAL JURISDICTION.
3. IF FOR ANY REASON CONTROL BLANKET PULLED OUT, TORN, OR OTHERWISE DAMAGED SHALL BE RE-INSTALLED. ANY SUBGRADE AREAS BELOW THE BLANKET THAT HAVE ERODED TO CREATE A VOID UNDER THE BLANKET, OR THAT REMAIN DEVOID OF GRASS SHALL BE REPAIRED, RESEEDED AND MULCHED AND THE EROSION CONTROL BLANKET REINSTALLED.

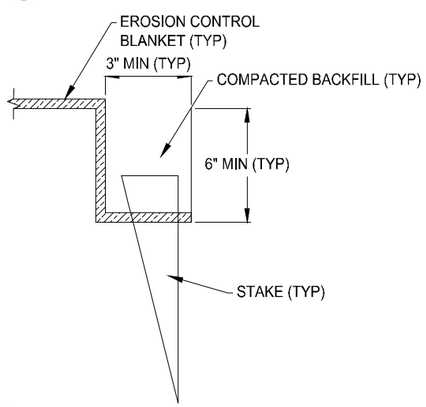

H PERIMETER TRENCH ANCHOR
NOT TO SCALE DETAIL

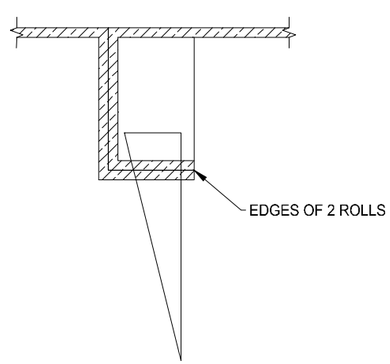

I JOINT TRENCH ANCHOR
NOT TO SCALE DETAIL

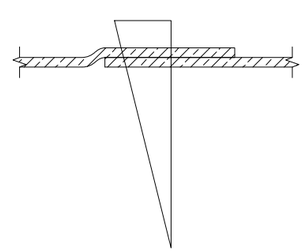

J OVERLAPPING JOINT
NOT TO SCALE DETAIL

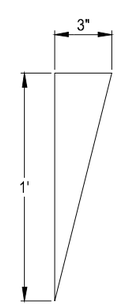

K WOOD STAKE
NOT TO SCALE DETAIL

NOTE: USE 2x4 MATERIAL FOR STAKES

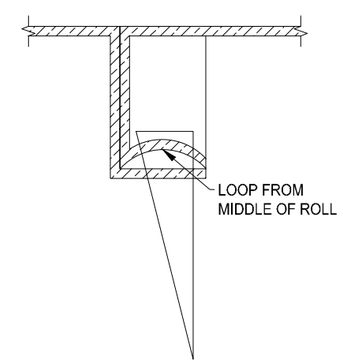

L INTERMEDIATE TRENCH ANCHOR
NOT TO SCALE DETAIL

EROSION CONTROL BLANKET INSTALLATION NOTES:

1. SEE PLAN VIEW FOR LOCATION OF EROSION CONTROL BLANKET.
2. ALL EROSION CONTROL BLANKETS SHALL BE MADE OF 100% NATURAL AND BIODEGRADABLE MATERIAL; NO PLASTIC OR OTHER SYNTHETIC MATERIAL, EVEN SHALL BE ALLOWED.
3. IN AREAS WHERE EROSION CONTROL BLANKET IS SHOWN ON THE PLANS, THE PERMITTEE SHALL PLACE TOPSOIL AND PERFORM FINAL GRADING, SURFACE PREPARATION, AND SEEDING BELOW THE SEEDING AND MULCHING. SUBGRADE SHALL BE SMOOTH AND MOIST PRIOR TO BLANKET INSTALLATION AND THE BLANKET SHALL BE IN FULL CONTACT WITH THE SUBGRADE.
4. PERIMETER ANCHOR TRENCH SHALL BE USED AT OUTSIDE PERIMETER OF ALL BLANKET AREAS.
5. JOINT TRENCH ANCHOR SHALL BE USED TO JOIN ROLLS OF BLANKETS TOGETHER.
6. INTERMEDIATE TRENCH ANCHOR SHALL BE USED AT SPACING OF 1/2 THE ROLL LENGTH.
7. THE OVERLAPPING JOINT DETAIL SHALL BE USED TO JOIN ROLLS OF BLANKETS TOGETHER FOR BLANKETS ON SLOPES.
8. ANY AREAS OF SEEDING AND MULCHING DISTURBED IN THE PROCESS OF INSTALLING EROSION CONTROL BLANKET SHALL BE RESEEDED AND MULCHED.
9. DETAILS ON DESIGN PLANS FOR MAJOR DRAINAGE WAY STABILIZATION WILL GOVERN IF DIFFERENT FROM ONES SHOWN HERE.

REV NO.	COMMENT	DATE

SUNRISE ENGINEERING
770 S WASHINGTON ST.
AFTON, WYOMING 83110
TEL 307.885.8500 · FAX 307.885.8501
www.sunrise-eng.com

GR-RS-SC JPWB

CROSSROADS PUMP STATION
EROSION CONTROL
DETAILS

SEI NO.	DESIGNED	DRAWN	CHECKED	SHEET NO.	
07265	FDK	BJ	JJL	96 of 99	D18

P:\WWDC GR-RS-SC JPWB Cross Roads Pump Station Level III (S07265)\Dwg C3D\Civil\Erosion Control.dwg Feb 13, 2026 9:42am bjenkins

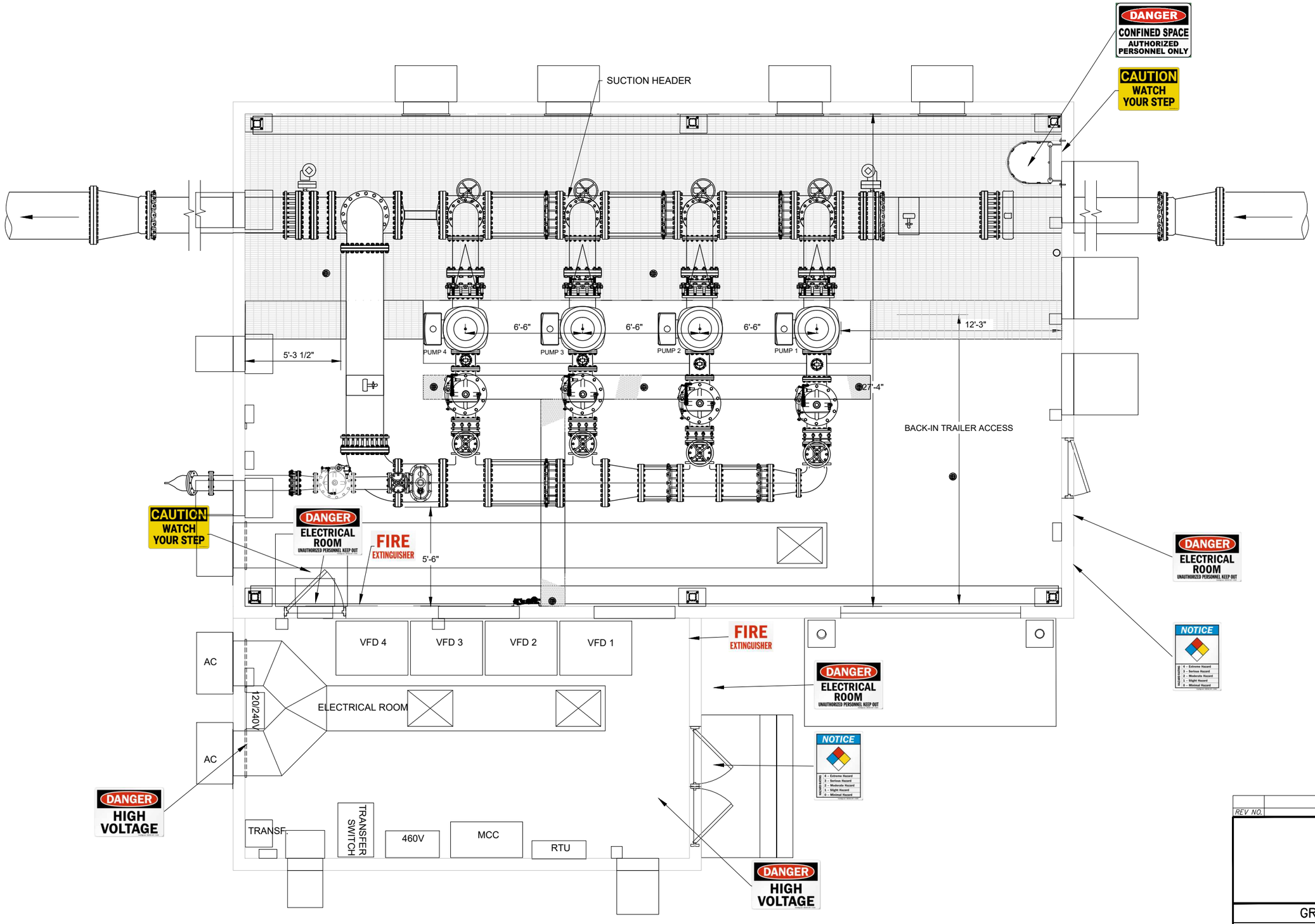

A PIPING
SCALE: 3/8"=1' PLAN VIEW

REV NO.	COMMENT	DATE

SUNRISE ENGINEERING
770 S WASHINGTON ST.
AFTON, WYOMING 83110
TEL 307.885.8500 · FAX 307.885.8501
www.sunrise-eng.com

GR-RS-SC JPWB

CROSSROADS PUMP STATION

MECHANICAL PIPING SIGNS

SEI NO.	DESIGNED	DRAWN	CHECKED	SHEET NO.	
07265	FDK	BJ	JJL	97 of 99	D19

P:\WWDC GR-RS-SC JPWB Cross Roads Pump Station Level III (S07265)\Dwg C3D\Pump Station\Details\Pump Station Layout.dwg Feb 13, 2026 9:42am bjenkins

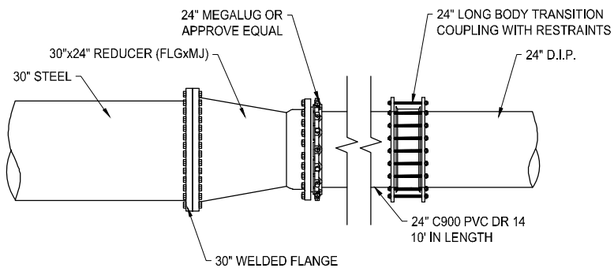

A 30" STEEL TO D.I.P. TRANSITION
NTS DETAIL

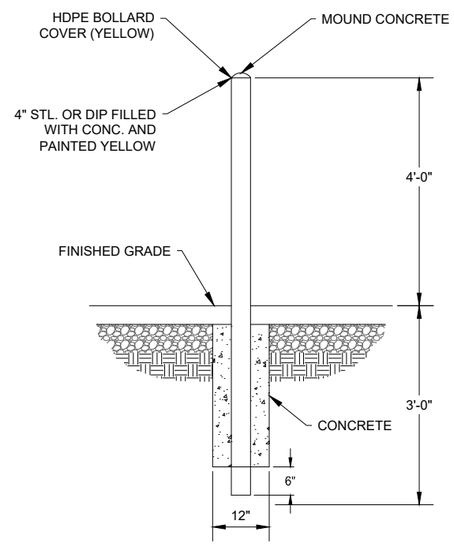

B BOLLARD AT APPURTENANCES
NOT TO SCALE

NOTE: MAINTAIN 3' MINIMUM CLEARANCE TO APPURTENANCE

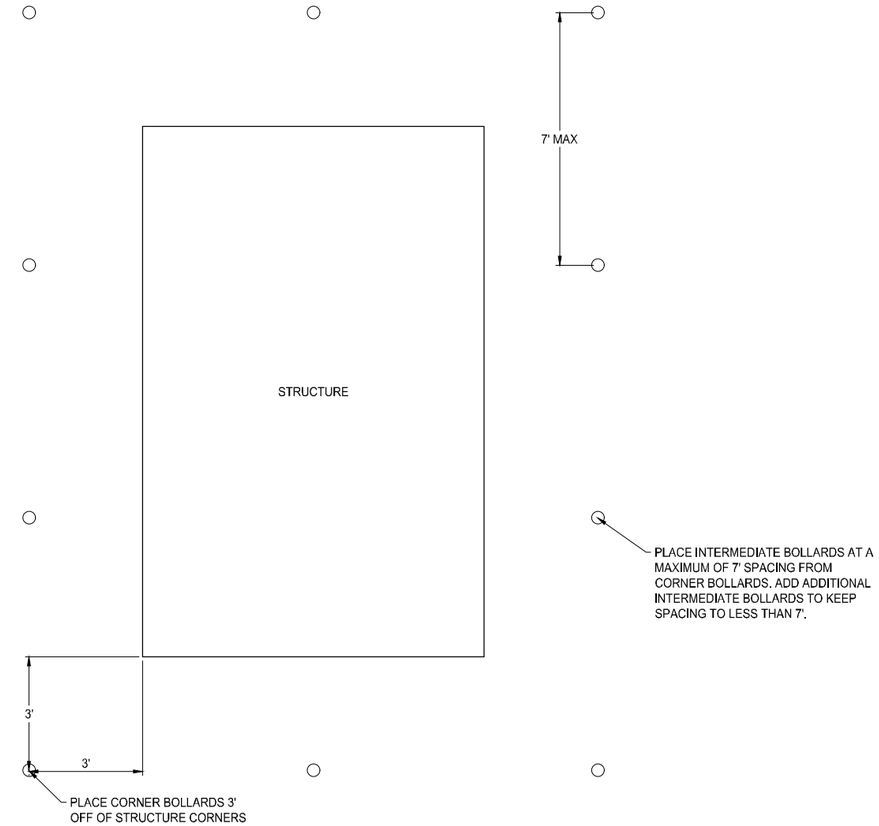

C BOLLARD PLACEMENT
NTS

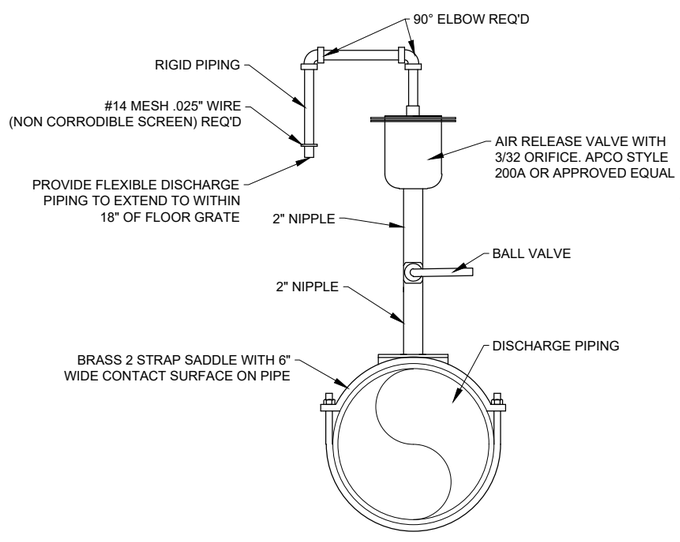

D AIR RELEASE VALVE
NOT TO SCALE DETAIL

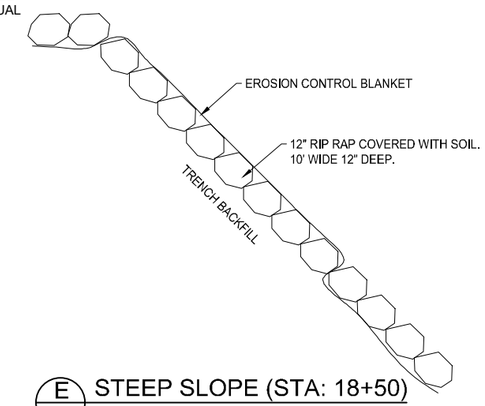

E STEEP SLOPE (STA: 18+50)
NOT TO SCALE DETAIL

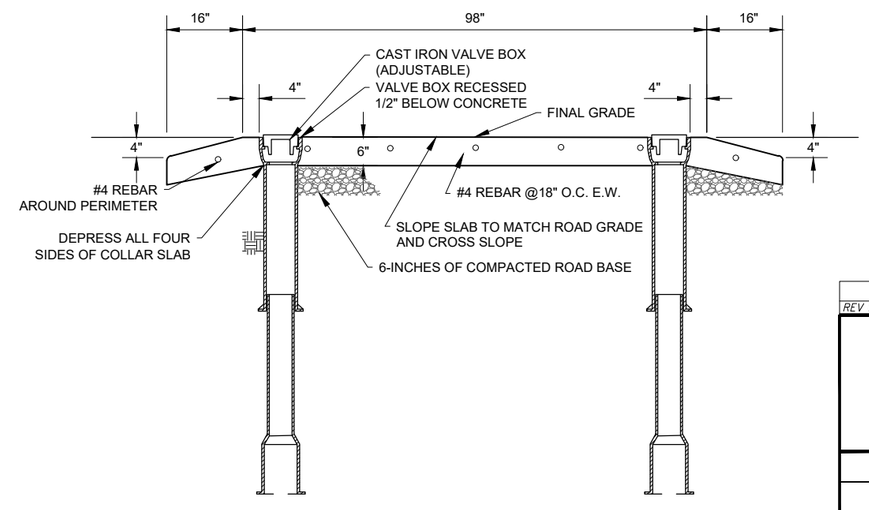

F VALVE CLUSTER COLLAR SLAB
NOT TO SCALE DETAIL

REV NO.	COMMENT	DATE

SUNRISE ENGINEERING
770 S WASHINGTON ST.
AFTON, WYOMING 83110
TEL 307.885.8500 · FAX 307.885.8501
www.sunrise-eng.com

GR-RS-SC JPWB

CROSSROADS PUMP STATION

PIPELINE DETAILS

SEI NO.	DESIGNED	DRAWN	CHECKED	SHEET NO.	
07265	FDK	BJ	JJL	98 of 99	D20

P:\WWDC GR-RS-SC JPWB Cross Roads Pump Station Level III (S07265)\Dwg C3D\Pump Station\Details\D20.dwg Feb 13, 2026 9:42am bjenkins

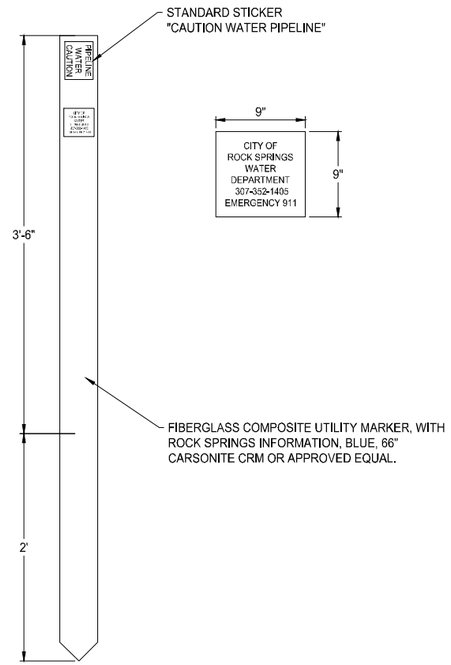

A ~ FIBERGLASS MARKER POST
NOT TO SCALE DETAIL

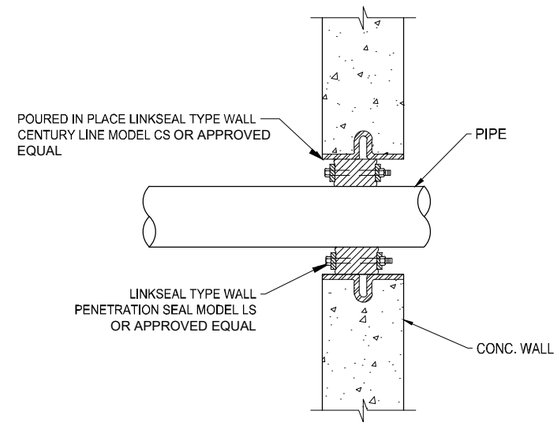

NOTES: CENTURY LINE SLEEVE OR APPROVED EQUAL TO BE SIZED FOR EACH PIPE AND WALL THICKNESS ACCORDING TO MANUFACTURES RECOMMENDATIONS CENTURY LINE SLEEVE END CAPS AS SUPPLIED BY MANUFACTURER, SHALL BE USED IN PLACING THE SLEEVE IN CONCRETE FORMS.

B ~ PIPE PENETRATION CONCRETE WALL
NOT TO SCALE DETAIL

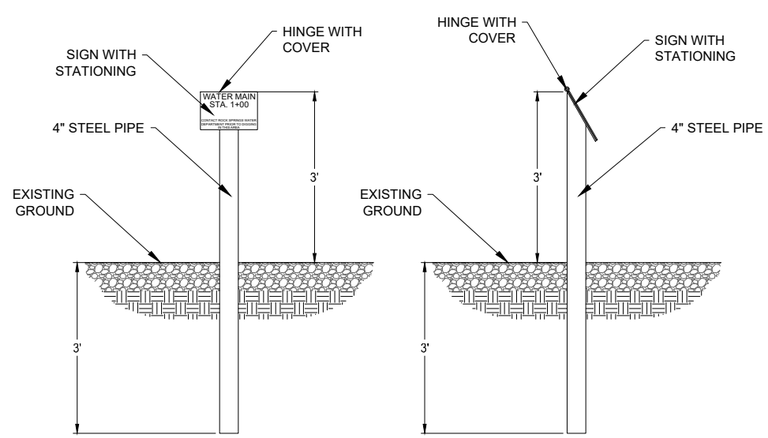

C ~ WATERLINE SIGN
NOT TO SCALE DETAIL

NOTE: PAINT SIGN POST DARK BLUE

WATERLINE SIGN / MARKER POST LOCATIONS	
STATION	TYPE
4+95 @ BEND	WATERLINE SIGN - DETAIL E D20
14+10 @ BEND	WATERLINE SIGN - DETAIL E D20
16+42 @ BEND	WATERLINE SIGN - DETAIL E D20
18+40 @ BEND	WATERLINE SIGN - DETAIL E D20
23+60 @ BEND	WATERLINE SIGN - DETAIL E D20
31+40 @ BEND	WATERLINE SIGN - DETAIL E D20
32+40 @ BEND	WATERLINE SIGN - DETAIL E D20
35+48 @ BEND	WATERLINE SIGN - DETAIL E D20
37+55 @ BEND	WATERLINE SIGN - DETAIL E D20
41+57 @ BEND	WATERLINE SIGN - DETAIL E D20
43+30 @ BEND	WATERLINE SIGN - DETAIL E D20
49+10	FIBERGLASS MARKER POST DETAIL A D21
52+40	FIBERGLASS MARKER POST DETAIL A D21
58+00	FIBERGLASS MARKER POST DETAIL A D21
62+10	FIBERGLASS MARKER POST DETAIL A D21
74+00	FIBERGLASS MARKER POST DETAIL A D21
84+00	FIBERGLASS MARKER POST DETAIL A D21
94+00	FIBERGLASS MARKER POST DETAIL A D21
105+58 @ BEND	WATERLINE SIGN - DETAIL E D20
110+60 @ BEND	WATERLINE SIGN - DETAIL E D20
111+90 @ BEND	WATERLINE SIGN - DETAIL E D20
121+40	FIBERGLASS MARKER POST DETAIL A D21
131+40	FIBERGLASS MARKER POST DETAIL A D21
135+50 @ BEND	WATERLINE SIGN - DETAIL E D20

NOTE: FIVE ADDITIONAL FIBERGLASS MARKER POSTS ARE TO BE PROVIDED WITH LOCATION TO BE DETERMINED IN FIELD.

REV NO.	COMMENT	DATE

SUNRISE ENGINEERING
770 S WASHINGTON ST.
AFTON, WYOMING 83110
TEL 307.885.8500 · FAX 307.885.8501
www.sunrise-eng.com

GR–RS–SC JPWB

CROSSROADS PUMP STATION

PIPELINE DETAILS

SEI NO.	DESIGNED	DRAWN	CHECKED	SHEET NO.	
07265	FDK	BJ	JJL	99 of 99	D21

P:\WWDC GR-RS-SC JPWB Cross Roads Pump Station Level III (S07265)\Dwg C3D\Pump Station\Details\D20.dwg Feb 13, 2026 9:42am bjenkins