NATIONAL HIGHWAY SYSTEM? ☐ NO ■ YES

Related Projects:
P. E. UNDER PROJECT:
Project Number: NHPP 0701-263
Project Code: 27298

DEPARTMENT OF TRANSPORTATION
STATE OF COLORADO

HIGHWAY CONSTRUCTION BID PLANS OF PROPOSED
FEDERAL AID PROJECT NO. NHPP 0701-263
STATE HIGHWAY NO. 070A
MESA COUNTY
CONSTRUCTION PROJECT CODE NO. 27298

070A Resurfacing Horizon Dr. to Clifton

All seals for this set of drawings are applied to the cover page(s)

Print Date: 3/17/2026
File Name: 27298_GN_DR-Title Sheet.dgn
Horiz. Scale: Vert. Scale: As Noted
Unit Information MSC

Sheet Revisions		
Date:	Comments	Init.

Colorado Department of Transportation
606 South 9th Street
Grand Junction, co 81501
Phone: 970-683-6351
Fax: 970-683-6369
Region 3 KC

As Constructed
No Revisions:
Revised:
Void:

Cover Page
Contractor:
Resident Engineer: Kaitlyn Clark
Project Engineer:
PROJECT STARTED: / / ACCEPTED: / /
Comments:

Project No./Code
NHPP 0701-263
27298
Cover Page 1

scismtb 7:25:54 AM pw:\\cdot-pw.bentley.com:cdot-pw-01p\Documents\02 Minor Projects\CDOT Collaboration Projects\27298 - 070a resurfacing mp 31.0-37.0\01 Pre-Construction\Drawings\General\27298_GN_DR-Title Sheet.dgn

NATIONAL HIGHWAY SYSTEM? ☐ NO ■ YES

Related Projects:
P. E. UNDER PROJECT:
Project Number: NHPP 0701-263
Project Code: 27298

DEPARTMENT OF TRANSPORTATION
STATE OF COLORADO

HIGHWAY CONSTRUCTION BID PLANS OF PROPOSED
FEDERAL AID PROJECT NO. NHPP 0701-263
STATE HIGHWAY NO. 070A
MESA COUNTY
CONSTRUCTION PROJECT CODE NO. 27298
070A Resurfacing Horizon Dr. to Clifton

TABULATION OF LENGTH

STATION / MILEPOST	FEET ROADWAY	FEET STRUCTURE
BEGIN PROJECT		
WESTBOUND		
STA 100+00 = MP 31.39		
	872	
STA 108+72		
STRUCTURE H-02-EV		83
STA 109+55		
	25,528	
STA 364+83 = MP 36.38		
EASTBOUND		
STA 1000+00 = MP 31.39		
	916	
STA 1009+16		
STRUCTURE H-02-EW		79
STA 1009+95		
	28,859	
STA 1298+54 = MP 37		
RAMPS		
EXIT 31 WB ON/OFF, EB ON/OFF, EXIT 37 EB ON/OFF	8,589	
END PROJECT		
SUMMARY OF PROJECT LENGTH	**FEET**	**MILES**
ROADWAY LENGTH	64,764	12.27
MAJOR STRUCTURE LENGTH	162	0.03
PROJECT GROSS LENGTH	64,926	12.30

DESIGN DATA	I-70
MAXIMUM DESIGN SPEED	75
2024 DESIGN TRAFFIC	25000
% TRUCKS	12.8

PROJECT DESCRIPTION

THIS PROJECT IS LOCATED ON I-70 FROM MP 31.39 TO MP 37 INCLUDING INTERCHANGE RAMPS AT EXITS 31 AND 37. THE WORK CONSISTS OF A 2 INCH HMA MILL AND FILL. THE PROJECT ALSO INCLUDES GUARDRAIL REPLACEMENT, DELINEATION, AND FINAL STRIPING.

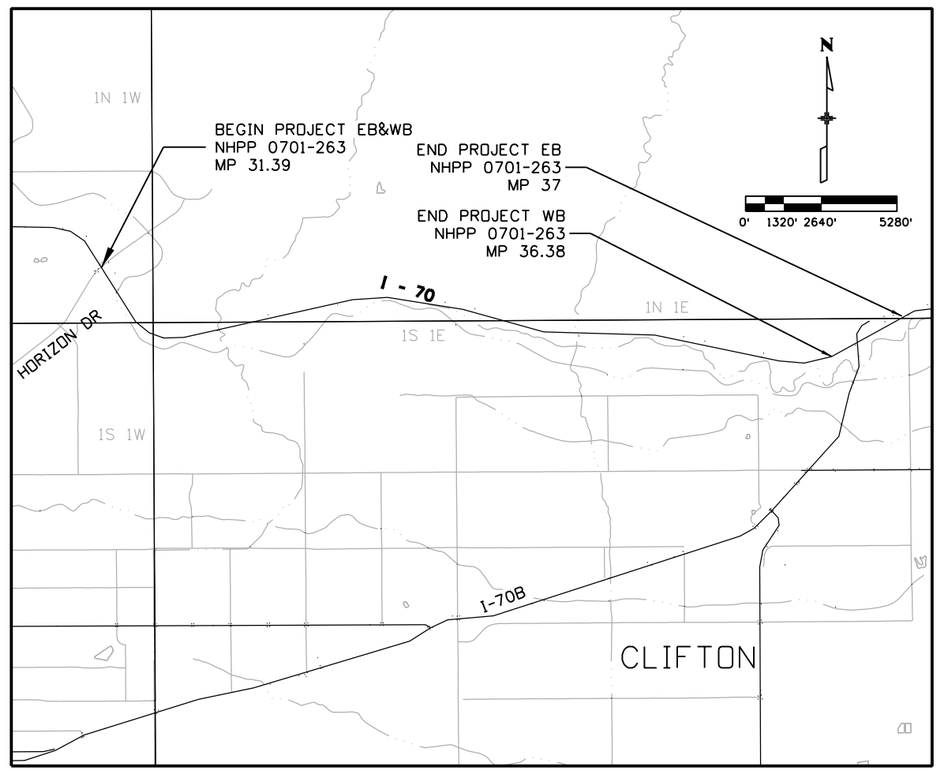

PROJECT LOCATION MAP

SHEET No.	TITLE
1	COVER SHEET
2	TITLE SHEET
3	M&S STANDARD PLANS LIST
4	TYPICAL SECTIONS
5 - 6	GENERAL NOTES
7 - 9	SUMMARY OF APPROXIMATE QUANTITIES
10 - 11	TABULATION OF SURFACING
12	TABULATION OF GUARDRAIL
13	TABULATION OF PAVEMENT MARKING
14	TABULATION OF MISCELLANEOUS
15	TABULATION OF TRAFFIC CONTROL DEVICES
16	GUARDRAIL DETAILS
17 - 21	BRIDGE GENERAL NOTES, SAQ, DETAILS
22 - 25	STORMWATER MANAGEMENT PLAN

All seals for this set of drawings are applied to the cover page(s)

Print Date: 3/17/2026
File Name: 27298_GN_DR-Title Sheet.dgn
Horiz. Scale: Vert. Scale: As Noted
Unit Information MSC

Sheet Revisions

Date:	Comments	Init.

Colorado Department of Transportation
606 South 9th Street
Grand Junction, co 81501
Phone: 970-683-6351
Fax: 970-683-6369
Region 3 KC

As Constructed
No Revisions:
Revised:
Void:

Contract Information
Contractor:
Resident Engineer: Kaitlyn Clark
Project Engineer:
PROJECT STARTED: / / ACCEPTED: / /
Comments:

Project No./Code
NHPP 0701-263
27298
Sheet Number 2

scismb 7:25:55 AM pw:\\cdot-pw.bentley.com:cdot-pw-01p\Documents\02 Minor Projects\CDOT Collaboration Projects\27298 - 070a resurfacing mp 31.0-37.0\01 Pre-Construction\Drawings\General\27298_GN_DR-Title Sheet.dgn

PLAN NUMBER	M STANDARD TITLE	PAGE NUMBER
■ M-100-1	STANDARD SYMBOLS (3 SHEETS)	1-3
■ M-100-2	ACRONYMS AND ABBREVIATIONS (4 SHEETS)	4-7
☐ M-203-1	APPROACH ROADS	8
☐ M-203-2	DITCH TYPES	9
☐ M-203-11	SUPERELEVATION CROWNED AND DIVIDED HIGHWAYS (3 SHEETS)	10-12
☐ M-203-12	SUPERELEVATION STREETS (2 SHEETS)	13-14
☐ M-206-1	EXCAVATION AND BACKFILL FOR STRUCTURES (2 SHEETS)	15-16
☐ M-206-2	EXCAVATION AND BACKFILL FOR BRIDGES (2 SHEETS)	17-18
■ M-208-1	TEMPORARY EROSION CONTROL (11 SHEETS) *(REVISED ON MAY 16, 2024)*	19-29
☐ M-210-1	MAILBOX SUPPORTS (2 SHEETS)	30-31
☐ M-214-1	NURSERY STOCK DETAILS	32
☐ M-216-1	SOIL RETENTION COVERING (2 SHEETS)	33-34
■ M-400-1	SAFETYEDGE FOR PAVEMENT *(NEW, ISSUED ON APRIL 25, 2025)*	
☐ M-412-1	CONCRETE PAVEMENT JOINTS (9 SHEETS) *(REVISED ON JANUARY 31, 2022)*	~~35-39~~
☐ M-412-2	CONCRETE PAVEMENT CRACK REPAIR (6 SHEETS) *(REVISED ON SEPTEMBER 6, 2022)*	
☐ M-510-1	STRUCTURAL PLATE PIPE H-20 LOADING	40
☐ M-601-1	SINGLE CONCRETE BOX CULVERT (CAST-IN-PLACE) (2 SHEETS)	41-42
☐ M-601-2	DOUBLE CONCRETE BOX CULVERT (CAST-IN-PLACE) (2 SHEETS)	43-44
☐ M-601-3	TRIPLE CONCRETE BOX CULVERT (CAST-IN-PLACE) (2 SHEETS)	45-46
☐ M-601-10	HEADWALL FOR PIPES	47
☐ M-601-11	TYPE "S" SADDLE HEADWALLS FOR PIPE	48
☐ M-601-12	HEADWALLS AND PIPE OUTLET PAVING	49
☐ M-601-20	WINGWALLS FOR PIPE OR BOX CULVERTS (2 SHEETS)	50-51
☐ M-603-1	METAL PIPE (4 SHEETS)	52-55
☐ M-603-2	REINFORCED CONCRETE PIPE	56
☐ M-603-3	PRECAST CONCRETE BOX CULVERT *(REVISED ON SEPTEMBER 10, 2020)*	~~57~~
☐ M-603-4	CORRUGATED POLYETHYLENE PIPE (AASHTO M294) AND CORRUGATED POLYPROPYLENE PIPE (AASHTO M330) (2 sheets) *(REVISED ON MARCH 7, 2022)*	~~58~~
☐ M-603-5	POLYVINYL CHLORIDE (PVC) PIPE (AASHTO M304)	59
☐ M-603-6	STEEL REINFORCED POLYETHYLENE RIBBED PIPE (AASHTO MP 20)	60
☐ M-603-10	CONCRETE AND METAL END SECTIONS	61
☐ M-603-12	TRAVERSABLE END SECTIONS AND SAFETY GRATES (3 SHEETS)	62-64
☐ M-604-10	INLET, TYPE C	65
☐ M-604-11	INLET, TYPE D	66
☐ M-604-12	CURB INLET TYPE R (2 SHEETS)	67-68
☐ M-604-13	CONCRETE INLET TYPE 13	69
☐ M-604-20	MANHOLES (3 SHEETS)	70-72
☐ M-604-25	VANE GRATE INLET (5 SHEETS) *(REV. ON FEB. 3, 2023)*	73-77
☐ M-605-1	SUBSURFACE DRAINS	78
■ M-606-1	MIDWEST GUARDRAIL SYSTEM TYPE 3 W-BEAM 31 INCHES (19 SHEETS) *(REVISED ON MARCH 5, 2020)*	~~79-97~~
☐ M-606-13	GUARDRAIL TYPE 7 F-SHAPE BARRIER (4 SHEETS)	98-101
☐ M-606-14	PRECAST TYPE 7 CONCRETE BARRIER (4 SHEETS) *(REVISED ON FEBRUARY 9, 2023)*	~~102-104~~
☐ M-606-15	GUARDRAIL TYPE 9 SINGLE SLOPE BARRIER (11 SHEETS) *(REVISED ON FEBRUARY 17, 2023)*	~~105-115~~
☐ M-607-1	WIRE FENCES AND GATES (3 SHEETS)	116-118
☐ M-607-2	CHAIN LINK FENCE (3 SHEETS)	119-121
☐ M-607-3	BARRIER FENCE	122
☐ M-607-4	DEER FENCE, GATES, AND GAME RAMPS (7 SHEETS) *(REVISED ON JULY 13, 2020)*	~~123-127~~
☐ M-607-10	PICKET SNOW FENCE	128
☐ M-607-15	ROAD CLOSURE GATE (9 SHEETS)	129-137
☐ M-608-1	CURB RAMPS (10 SHEETS)	138-147
☐ M-609-1	CURBS, GUTTERS, AND SIDEWALKS (4 SHEETS)	148-151
☐ M-611-1	CATTLE GUARD (2 SHEETS)	152-153
☐ M-611-2	DEER GUARD (2 SHEETS)	154-155
M-613-1	SUPERSEDED WITH S-613-1 AND S-613-2 IN JULY 2019	
■ M-614-1	RUMBLE STRIPS (3 SHEETS)	156-158
☐ M-614-2	SAND BARREL ARRAYS (2 SHEETS)	159-160
☐ M-615-1	EMBANKMENT PROTECTOR TYPE 3	161
☐ M-615-2	EMBANKMENT PROTECTOR TYPE 5	162
☐ M-616-1	INVERTED SIPHON	163
☐ M-620-1	FIELD LABORATORY CLASS 1	164
■ M-620-2	FIELD LABORATORY CLASS 2 (2 SHEETS)	165-166
☐ M-620-11	FIELD OFFICE CLASS 1	167
■ M-620-12	FIELD OFFICE CLASS 2	168
☐ M-629-1	SURVEY MONUMENTS (2 SHEETS)	169-170

PLAN NUMBER	S STANDARD TITLE	PAGE NUMBER
■ S-612-1	DELINEATOR INSTALLATIONS (8 SHEETS) *(REV. ON APR. 3, 2025)*	~~171-178~~
☐ S-613-1	ROADWAY LIGHTING (6 SHEETS) *(REVISED ON APRIL 3, 2025)*	~~179-186~~
☐ S-613-2	ALTERNATIVE ROADWAY LIGHTING (4 SHEETS) *(ISSUED ON SEP. 30, 2020)*	
☐ S-613-3	PULL BOX DETAIL (2 SHEETS) *(ISSUED ON APRIL 4, 2024)*	
☐ S-613-4	TRAFFIC SIGNAL ONE-LINE DIAGRAMS (6 SHEETS) *(ISS. ON JUNE 15, 2023) (REVISED ON JAN. 9, 2026)*	
■ S-614-1	GROUND SIGN PLACEMENT (2 SHEETS)	187-188
■ S-614-2	CLASS I SIGNS *(REVISED ON MARCH 1, 2024)*	189
☐ S-614-3	CLASS II SIGNS *(REVISED ON MARCH 1, 2024)*	190
■ S-614-4	CLASS III SIGNS (3 SHEETS) *(REVISED ON MARCH 1, 2024)*	191-193
■ S-614-5	BREAK-AWAY SIGN SUPPORT DETAILS FOR CLASS III SIGNS (2 SHEETS)	194-195
☐ S-614-6	CONCRETE FOOTINGS AND SIGN ISLANDS FOR CLASS III SIGNS (2 SHEETS)	196-197
■ S-614-8	TUBULAR STEEL SIGN SUPPORT DETAILS (7 SHEETS) *(REVISED ON MARCH 1, 2024)*	198-204
~~S-614-9~~	~~PEDESTRIAN PUSH BUTTON POST ASSEMBLY (2 SHEETS) *(SUPERSEDED ON JANUARY 22, 2020 BY S-614-45)*~~	~~205-206~~
☐ S-614-10	MARKER ASSEMBLY INSTALLATIONS	207
☐ S-614-11	MILEPOST SIGN DETAIL FOR HIGH SNOW AREAS	208
☐ S-614-12	STRUCTURE NUMBER INSTALLATION (2 SHEETS)	209-210
☐ S-614-14	FLASHING BEACON AND SIGN INSTALLATIONS (4 SHEETS) *(REVISED ON JANUARY 9, 2026)*	211-214
☐ S-614-15	CHAIN STATION SIGNAGE *(ISSUED ON APRIL 30, 2024)*	
☐ S-614-17	RADAR SPEED FEEDBACK SIGN (RSFS) (3 SHEETS) *(NEW, ISSUED ON JAN. 9, 2026)*	
☐ S-614-19	LATE/ZIPPER MERGE SIGNAGE *(ISSUED ON SEPT. 22, 2025)*	
☐ S-614-20	TYPICAL POLE MOUNT SIGN INSTALLATIONS *(REVISED ON MARCH 1, 2024)*	215
☐ S-614-21	CONCRETE BARRIER SIGN POST INSTALLATIONS (2 SHEETS) *(REVISED ON SEPTEMBER 21, 2020)*	216-217
☐ S-614-22	TYPICAL MULTI-SIGN INSTALLATIONS	218
☐ S-614-23	J-POST SIGN SUPPORT (3 SHEETS) *(ISSUED ON MARCH 1, 2024)*	
☐ S-614-40	TYPICAL TRAFFIC SIGNAL 30'-75' DOUBLE MAST ARMS 65'-75' SINGLE MAST ARMS (5 SHEETS) *(REVISED ON JAN. 9, 2026)*	219-223
☐ S-614-40A	ALTERNATIVE TRAFFIC SIGNAL 25'-55' SINGLE MAST ARMS (4 SHEETS) *(REVISED ON JAN. 9, 2026)*	224-227
☐ S-614-41	TEMPORARY SPAN WIRE SIGNALS (13 SHEETS)	228-240
☐ S-614-42	CABINET FOUNDATION DETAIL (4 SHEETS) *(REVISED ON APRIL 4, 2024)*	241-244
☐ S-614-43	TRAFFIC LOOP AND MISCELLANEOUS SIGNAL DETAILS (8 SHEETS) *(REVISED ON JANUARY 9, 2026)*	245-252
☐ S-614-44	PEDESTAL POLE SIGNALS (2 SHEETS) *(REV. ON JAN. 9, 2026)*	253-254
☐ S-614-45	PEDESTRIAN PUSH BUTTON POST ASSEMBLY DETAILS (6 SHEETS) *(REVISED ON JANUARY 9, 2026)*	
☐ S-614-50	STATIC SIGN MONOTUBE STRUCTURES (12 SHEETS)	255-266
☐ S-614-60	DYNAMIC SIGN MONOTUBE STRUCTURES (14 SHEETS)	267-280
■ S-627-1	PAVEMENT MARKINGS (11 SHEETS) *(REV. ON JAN. 14, 2026)*	~~281-289~~
■ S-630-1	TRAFFIC CONTROLS FOR HIGHWAY CONSTRUCTION (26 SHEETS) *(REVISED ON JANUARY 14, 2026)*	~~290-313~~
■ S-630-2	BARRICADES, DRUMS, CONCRETE BARRIERS (TEMP) AND VERTICAL PANELS	314
☐ S-630-3	FLASHING BEACON (PORTABLE) DETAILS	315
■ S-630-4	STEEL SIGN SUPPORT (TEMPORARY) INSTALLATION DETAILS (2 SHEETS)	316-317
■ S-630-5	PORTABLE RUMBLE STRIPS (TEMPORARY) (2 SHEETS)	318-319
☐ S-630-6	EMERGENCY PULL-OFF AREA (TEMPORARY) *(REV. ON JAN. 9, 2026)*	320
☐ S-630-7	ROLLING ROADBLOCKS FOR TRAFFIC CONTROL (3 SHEETS)	321-323

COLORADO
DEPARTMENT OF TRANSPORTATION

M&S STANDARDS PLANS LIST

July 31, 2019

Revised on January 16, 2026

ALL OF THE M&S STANDARD PLANS, AS SUPPLEMENTED AND REVISED, APPLY TO THIS PROJECT WHEN USED BY DESIGNATED PAY ITEM OR SUBSIDIARY ITEM.

THE M&S STANDARD PLANS USED TO DESIGN THIS PROJECT ARE INDICATED BY A MARKED BOX ■, AND WILL BE ATTACHED TO THE PLANS. ALL OTHER M&S STANDARD PLANS ARE STILL ELIGIBLE FOR USE IN CONSTRUCTION IF APPROVED BY AN APPROPRIATE CDOT ENGINEER.

MY RESPONSIBILITY WITH RESPECT TO THIS PLAN SHEET IS LIMITED TO THE SELECTION OF THE STANDARD PLANS FOR THIS PROTECT AND A DETERMINATION THAT THE SELECTION IS APPROPRIATE FOR THE PROJECT.

All seals for this set of drawings are applied to the cover page(s)

Print Date: 3/17/2026
File Name: 27298_GN_DR-M&S.dgn
Horiz. Scale: Vert. Scale: As Noted
Unit Information MSC

Sheet Revisions

Date:	Comments	Init.

Colorado Department of Transportation
606 South 9th Street
Grand Junction, co 81501
Phone: 970-683-6351
Fax: 970-683-6369
Region 3 KC

As Constructed
No Revisions:
Revised:
Void:

STANDARD PLAN LIST

Designer: TS | Structure Numbers
Detailer: TS
Sheet Subset: M&S | Subset Sheets: 1 of 001

Project No./Code
NHPP 0701-263
27298
Sheet Number 3

scismtb 7:26:08 AM pw:\\cdot-pw.bentley.com:cdot-pw-01p\Documents\02 Minor Projects\CDOT Collaboration Projects\27298 - 070a resurfacing mp 31.0-37.0\01 Pre-Construction\Drawings\General\27298_GN_DR-M&S.dgn

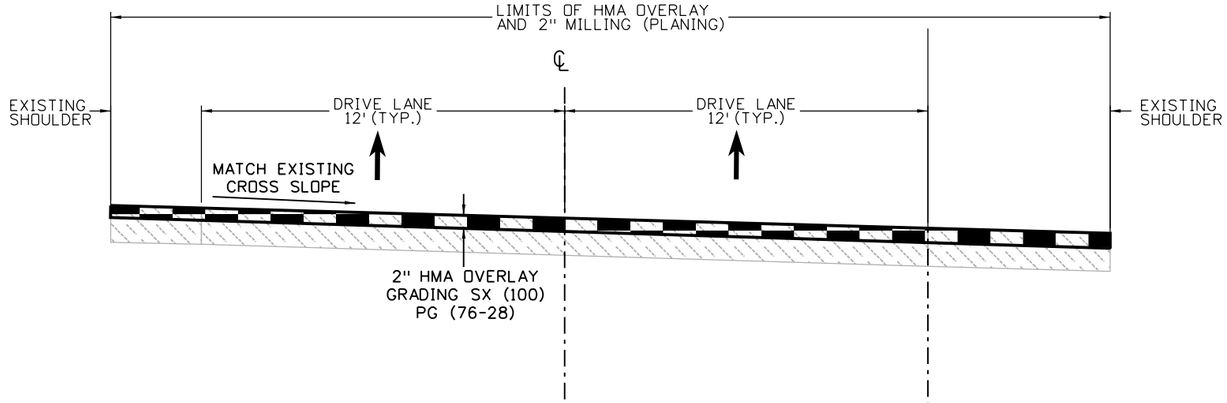

1 I-70 TYPICAL SECTION

WB STA 100+00 - 364+83
EB STA 1000+00 - 1298+54

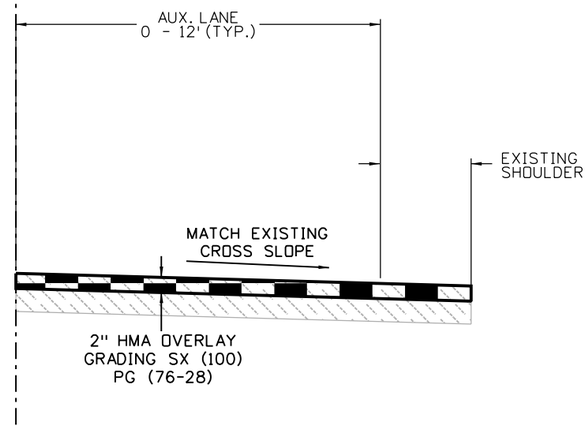

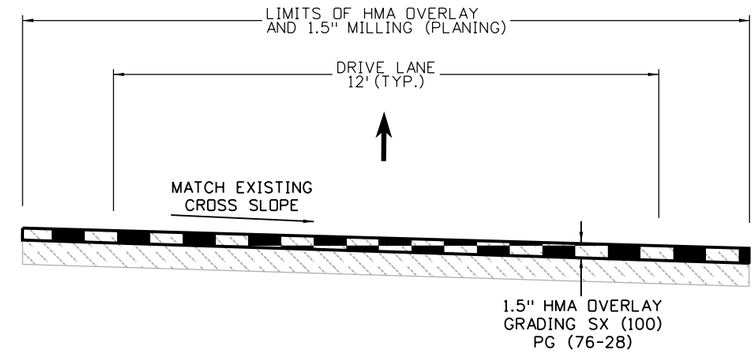

2 I-70 RAMP TYPICAL SECTION

EXIT 31 WB OFF AND ON
EXIT 31 EB OFF AND ON
EXIT 37 EB OFF AND ON

LEGEND

= HMA

= EXISTING ASPHALT

NOTES:

1. PAVEMENT AND SHOULDER WIDTHS VARY THROUGHOUT THE PROJECT. SEE TABULATION OF SURFACING FOR TOTAL PAVEMENT WIDTHS.

All seals for this set of drawings are applied to the cover page(s)	Print Date: 3/17/2026	Sheet Revisions	Colorado Department of Transportation	As Constructed	TYPICAL SECTION		Project No./Code
	File Name: 27298_GN_DR-Typical Sections.dgn	Date: / Comments / Init.	606 South 9th Street	No Revisions:			NHPP 0701-263
	Horiz. Scale: / Vert. Scale: As Noted		Grand Junction, co 81501	Revised:	Designer: TS / Structure Numbers		27298
	Unit Information MSC		Phone: 970-683-6351		Detailer: TS		
			Fax: 970-683-6369	Void:	Sheet Subset: TYP. SECT. / Subset Sheets: 1 of 001		Sheet Number 4
			Region 3 KC				

scismtb 7:26:21 AM pw:\\cdot-pw.bentley.com:cdot-pw-01p\Documents\02 Minor Projects\CDOT Collaboration Projects\27298 - 070a resurfacing mp 31.0-37.0\01 Pre-Construction\Drawings\General\27298_GN_DR-Typical Sections.dgn

GENERAL NOTES

GENERAL

G1. THE CONTRACTOR SHALL FIELD VERIFY LENGTHS, DIAMETERS, ELEVATIONS, LOCATIONS AND THICKNESS BEFORE ORDERING MATERIALS.

G2. NO EXCESS MATERIAL SHALL BE DISPOSED OF WITHIN THE PROJECT LIMITS BUT SHALL BE HAULED OFF SITE FOR DISPOSAL, WHICH SHALL BE INCLUDED IN THE COST OF THE WORK.

G3. A CLEAR ZONE CRITERIA OF 34 FEET SHALL BE USED DURING THIS PROJECT. NO PARKING OR EQUIPMENT STORAGE SHALL BE ALLOWED WITHIN THE CLEAR ZONE OR WITHIN THE MEDIAN. THE CONTRACTOR SHALL NOT STOCKPILE MATERIAL WITHIN THE CLEAR ZONE.

G4. BILLS OF LADING SHALL BE GIVEN TO THE PROJECT ENGINEER FOR ALL DELIVERIES AT THE END OF EACH WORKDAY.

G5. THE CONTRACTOR SHALL PLACE STATIONING STAKES WITH STATIONING INFORMATION EVERY 500 FEET THROUGHOUT THE PROJECT PRIOR TO THE BEGINNING OF WORK. THIS SHALL NOT BE PAID SEPARATELY BUT SHALL BE INCLUDED IN THE WORK.

G6. LOCATION OF FIELD OFFICE AND FIELD LABORATORY SHALL BE SUBJECT TO PRIOR APPROVAL BY THE ENGINEER.

G7. ALL POTHOLING METHODS AND LOCATIONS SHALL BE PREAPPROVED BY THE ENGINEER. ANY POTHOLING THAT HAS NOT BEEN PREAPPROVED BY THE ENGINEER SHALL BE AT THE CONTRACTORS EXPENSE.

G8. UNLESS OTHERWISE NOTED, MATERIALS SHALL BE CONTRACTOR'S SOURCE.

RUMBLE STRIPS

RS1. RUMBLE STRIPS SHALL BE SPRAYED WITH EMULSIFIED ASPHALT (SLOW-SETTING) AFTER THEIR INSTALLATION ON THE SAME WORKING DAY. EMULSIFIED ASPHALT (SLOW-SETTING) SHALL NOT BE MEASURED AND PAID FOR SEPARATELY BUT SHALL BE INCLUDED IN THE COST OF ITEM 614-RUMBLE STRIP.

RS2. ALL MILLINGS THAT MAY BE GENERATED AS A RESULT OF THE REMOVAL OF OPERATIONS SHALL BE REMOVED AND CONTAINED AS THE WORK PROGRESSES. THE CONTRACTOR SHALL HAVE A VACUUM TRUCK ONSITE AT EACH WORK ZONE TO REMOVE THE MILLINGS. THIS WORK SHALL BE INCLUDED IN THE COST OF ITEM 614-RUMBLE STRIP.

EARTHWORK

E1. WATER SOURCE REQUIRED FOR MOISTURE/DENSITY CONTROL SHALL BE THE CONTRACTOR'S RESPONSIBILITY AND SHALL BE FREE OF EXCESSIVE SEDIMENTS AND OTHER CONTAMINANTS THAT MAY BE DETRIMENTAL TO EMBANKMENTS, SUB-BASES, AND BASE COURSE MATERIAL.

E2. ALL SLOPES SHALL BE ROUGHENED AS DIRECTED BY THE ENGINEER. COSTS ASSOCIATED WITH THIS ORDER SHALL BE INCIDENTAL TO THE WORK.

E3. WATER SHALL BE USED AS A DUST PALLIATIVE WHERE REQUIRED. APPLICATION SHALL BE AS DIRECTED BY THE ENGINEER. WATER AS A DUST PALLIATIVE AND ANY OTHER WETTING SHALL BE INCLUDED IN THE WORK AND WILL NOT BE PAID SEPARATELY.

E4. THE CONTRACTOR SHALL BE RESPONSIBLE TO OBTAIN ANY ADDITIONAL BORING LOGS AND/OR SOIL INFORMATION.

BASES & PAVEMENT

BP1. FOR PRELIMINARY PLAN QUANTITIES OF PAVING MATERIALS, THE FOLLOWING RATES OF APPLICATION AND UNIT WEIGHTS WERE USED:

A. TACK COAT-DILUTED EMULSIFIED ASPHALT (SLOW-SETTING) ..... @ 0.1 GAL/SY (DILUTED)
B. HOT MIX ASPHALT PAVEMENT (GRADING SX) ..... @ 110 LB/SY/INCH

BP2. DILUTED EMULSIFIED ASPHALT FOR TACK COAT SHALL CONSIST OF 1 PART WATER AND 1 PART EMULSIFIED ASPHALT. RATES OF APPLICATION SHALL BE DETERMINED BY THE ENGINEER AT THE TIME OF APPLICATION.

BP3. A TACK COAT OF EMULSIFIED ASPHALT (SLOW-SETTING) SHALL BE APPLIED AT THE FOLLOWING LOCATIONS:

A. BEFORE PLACING NEW PAVEMENT OVER EXISTING OR NEW PAVEMENT.
B. ADJACENT TO EXISTING PAVEMENT, AND OTHER SURFACES AGAINST WHICH ASPHALT IS PLACED.
C. BETWEEN PAVEMENT COURSES.

BP4. EMULSIFIED ASPHALT (SLOW-SETTING) FOR TACK COAT SHALL BE APPLIED TO OVERLAP THE LONGITUDINAL SEAM.

BP5. THE FOLLOWING SHALL BE PROVIDED WITH EACH BITUMINOUS PAVER:

A. A SKI TYPE DEVICE AT LEAST 30 FEET IN LENGTH.
B. A SHORT SKI OR SHOE.
C. 1500 FEET OF CONTROL LINE AND STAKES.

BP10. PAVER SHALL BE CAPABLE OF FULL AUTOMATIC OPERATIONS FOR SUPER ELEVATION CONTROL.

BP11. PAVEMENT WIDTHS VARY THROUGH THE PROJECT. THE LAY DOWN MACHINE SHALL HAVE AN ADJUSTABLE SCREED TO ACCOMMODATE VARIATIONS IN THE PAVEMENT WIDTH WHILE PROVIDING A FULL WIDTH PAVEMENT OVERLAY. PAVEMENT OVERLAYS SHALL MATCH EXISTING WIDTH OF PAVEMENT.

BP12. THE FULL WIDTH OF A LANE SHALL BE PAVED AT ONE TIME. JOINTS WILL NOT BE ALLOWED IN THE CENTER OF THE LANE.

BP13. ALL TRAVEL LANES ARE SUBJECT TO SMOOTHNESS INCENTIVE PAYMENTS. ROADWAY SMOOTHNESS FOR THIS PROJECT SHALL BE MRI CATEGORY A.

BP14. WHERE PAVEMENT IS TO ABUT EXISTING PAVEMENT, THE EXISTING ASPHALT SHALL BE REMOVED TO A NEAT VERTICAL LINE WITH A SAW OR AS APPROVED BY THE ENGINEER. CUT FACES SHALL NOT REMAIN UNPROTECTED. THIS WORK WILL NOT BE PAID SEPARATELY BUT SHALL BE CONSIDERED AS SUBSIDIARY TO THE WORK. THE CONTRACTOR WILL BE REQUIRED TO APPLY DILUTED EMULSIFIED ASPHALT (SLOW-SETTING) TO THE EDGE OF CUT ASPHALT PRIOR TO PAVING OPERATIONS.

BP15. ALL BUTT JOINT TRANSITIONS AT THE COMPLETION OF PAVING FOR THE DAY SHALL BE INSTALLED AT A MINIMUM 4':1" TRANSITION TAPER.

BP16. BEFORE PLACEMENT OF THE TACK COAT, THE CONTRACTOR SHALL CLEAN THE ROADWAY AS DIRECTED BY THE ENGINEER. CLEANING WILL NOT BE MEASURED AND PAID FOR SEPARATELY BUT SHALL BE CONSIDERED INCIDENTAL TO THE WORK.

BP17. ALL PLANING AND/OR PAVING OF THE TRAVEL LANES AND SHOULDERS SHALL BE COMPLETED FULL WIDTH BY END OF WORK WEEK. THE PLANING AND PAVING "PASSES" WILL BE BROUGHT UP TO WITHIN 100 FEET OF THE SAME POINT SO AS TO ELIMINATE LONGITUDINAL ELEVATION DIFFERENCES FOR TRAFFIC USING THE ROADWAY BY FRIDAY AT END OF WORK.

DRAINAGE

D1. THE CONTRACTOR SHALL PROVIDE LOCAL DRAINAGE DURING EACH PHASE OF CONSTRUCTION. THIS WORK WILL NOT BE PAID SEPARATELY BUT SHALL BE CONSIDERED INCIDENTAL TO THE WORK.

STRIPING

ST1. FINAL STRIPING SHALL BEGIN AT A POINT THAT MATCHES THE ADJACENT STRIPING AND SPACING.

ST2. THE CONTRACTOR SHALL BE REQUIRED TO LOG TYPE, SIZE, COLOR AND LOCATION OF EXISTING LANE MARKINGS FOR DUPLICATION PRIOR TO PAVING OPERATIONS. EXISTING LANE MARKINGS NOT IN CONFORMANCE WITH STANDARD S-627-1 SHALL BE MODIFIED TO THE CURRENT STANDARD AS DIRECTED BY THE ENGINEER. ALL LANE MARKINGS SHALL BE LAID OUT BY THE CONTRACTOR ON THE NEW SURFACE FOR FINAL STRIPING. THIS WORK WILL NOT BE MEASURED OR PAID FOR SEPARATELY BUT WILL BE INCLUDED IN THE COST OF PAVEMENT MARKING. THE PROJECT ENGINEER WILL CONTACT ANDRE PELLETIER, CDOT TRAFFIC OPERATIONS AT 970-640-0343, 2 WEEKS PRIOR TO FINAL STRIPING TO VERIFY.

TRAFFIC CONTROL

TC1. THIS PROJECT IS DESIGNATED AS NON-SIGNIFICANT FOR TRAFFIC CONTROL.

ENVIRONMENTAL

EN1. THE CONTRACTOR SHALL PREVENT TOOLS, CONCRETE, DIRT, AND OTHER DEBRIS OF ANY KIND FROM FALLING INTO THE CHANNEL OF ANY LIVE WATERCOURSE. THE CONTRACTOR SHALL CLEAN OR REMOVE FROM THE LIVE WATER ALL SUCH ITEMS THAT ENTER IT AS A RESULT OF THE CONTRACTOR'S OPERATIONS.

EN2. ALL EQUIPMENT STAGING AND MATERIAL STOCKPILING AREAS SHALL BE LOCATED IN AREAS THAT HAVE BEEN PREVIOUSLY DISTURBED AND OR APPROVED BY THE CDOT BIOLOGIST. ALL STAGING AREAS AND EQUIPMENT SHALL BE LOCATED AT LEAST 100 FEET FROM ANY LIVE WATERCOURSE.

GENERAL NOTES

EN3. THE CONTRACTOR SHALL LIMIT CONSTRUCTION ACTIVITIES TO THOSE AREAS WITHIN THE LIMITS OF DISTURBANCE. ANY DISTURBANCE BEYOND THESE LIMITS SHALL BE RESTORED TO ORIGINAL CONDITIONS BY THE CONTRACTOR AT THEIR OWN EXPENSE. CONSTRUCTION ACTIVITIES, IN ADDITION TO NORMAL CONSTRUCTION PROCEDURES, SHALL INCLUDE PARKING OF VEHICLES OR EQUIPMENT, DISPOSAL OF LITTER AND ANY OTHER ACTION WHICH WOULD ALTER EXISTING CONDITIONS.

EN4. STORMWATER MANAGEMENT MAY REQUIRE MULTIPLE SEEDING OPERATIONS. THESE OPERATIONS SHALL BE INCLUDED IN THE COST OF SEEDING AND MULCHING.

EN5. WORKERS SHALL BE ALERT FOR VISUAL AND/OR OLFACTORY SIGNS OF CONTAMINATION. IF CONTAMINATION IS ENCOUNTERED, WORK SHALL STOP AND PROCEDURES ESTABLISHED IN THE CDOT 250 SPECIFICATION SHALL BE FOLLOWED. ANY CONTAMINATED SOILS OR LANDFILL MATERIAL SHALL BE PROPERLY HANDLED AND SAMPLED PRIOR TO DISPOSAL.

RIGHT-OF-WAY

R1. ALL WORK SHALL BE COMPLETED ENTIRELY WITHIN THE EXISTING RIGHT OF WAY.

PAY ITEMS

PI1. ALL ITEMS NOT SHOWN IN THE SUMMARY OF QUANTITIES SHALL BE CONSIDERED INCIDENTAL TO THE WORK AND WILL NOT BE PAID FOR SEPARATELY. PAYMENT SHALL BE MADE ONLY FOR ITEMS ON THE PAY ITEM LIST.

PI2. IT IS ESTIMATED THAT THE FOLLOWING ITEMS WILL BE REQUIRED ON THIS PROJECT:

ITEM NO.	DESCRIPTION	QUANTITY	UNIT	NOTES
203-01500	BLADING	20	HOUR	WITH A MOTOR GRADER IN THE 130 TO 140 FLYWHEEL HORSEPOWER RANGE
203-01510	BACKHOE	10	HOUR	WITH A MINIMUM 50 HORSEPOWER BACKHOE
203-01582	TRUCK (DUMP)	10	HOUR	
203-01597	POTHOLING	20	HOUR	WITH NONINVASIVE VACUUM EQUIPMENT
203-02330	LABORER	10	HOUR	
620-00002	FIELD OFFICE (CLASS 2)	1	EACH	
620-00012	FIELD LABORATORY (CLASS 2)	1	EACH	
620-00020	SANITARY FACILITY	1	EACH	
625-00001	CONSTRUCTION SURVEYING (HOURLY)	10	HOUR	AS DIRECTED BY THE ENGINEER
626-00000	MOBILIZATION	1	LS	
626-01103	PUBLIC INFORMATION SERVICES (TIER III)	1	LS	

UTILITIES

U1. UTILITIES ARE NOT SHOWN ON THE PLANS

U2. THE CONTRACTOR'S ATTENTION IS DIRECTED TO SUBSECTION 105.11 OF THE STANDARD SPECIFICATIONS AND THE UTILITY PROJECT SPECIAL PROVISIONS CONCERNING UTILITIES. THE CONTRACTOR SHALL COORDINATE AND COOPERATE WITH UTILITY OWNERS IN THEIR REMOVAL, ADJUSTMENT AND/OR RELOCATION OPERATIONS SO THAT THE UTILITY WORK CAN BE ACCOMPLISHED WITHOUT IMPACTING THE CONSTRUCTION SCHEDULE.

U3. THE CONTRACTOR SHALL COMPLY WITH ARTICLE 1.5 OF TITLE 9, CRS, (EXCAVATION REQUIREMENTS) WHEN EXCAVATING OR GRADING IS PLANNED IN THE AREA OF UNDERGROUND UTILITY FACILITIES. THE CONTRACTOR SHALL CONTACT THE UTILITY NOTIFICATION CENTER OF COLORADO (UNCC) AT 811 OR 1-800-922-1987. THE CONTRACTOR SHALL NOTIFY ALL AFFECTED UTILITIES NO FEWER THAN TWO (2) BUSINESS DAYS PRIOR TO COMMENCING EXCAVATION OR GRADING. THE TWO (2) BUSINESS DAYS ARE IN ADDITION TO THE DAY NOTIFICATION WAS MADE TO UNCC.

U4. CDOT LOCATES ARE REQUESTED THROUGH THE UNCC. UTILITY SERVICE LATERALS SHALL ALSO BE LOCATED PRIOR TO EXCAVATION OR GRADING.

U5. THE CONTRACTOR SHALL BE RESPONSIBLE FOR VERIFYING THE LOCATION AND DEPTH OF ALL EXISTING UTILITIES AT PIPES, CULVERTS, CONCRETE BOX CULVERTS AND OTHER AREAS OF EXCAVATION AS NECESSARY TO ENSURE THE UTILITIES WILL NOT BE IMPACTED. IT IS ESTIMATED THAT TWENTY (20) HOURS OF POTHOLING WILL BE REQUIRED ON THIS PROJECT AS DIRECTED BY THE PROJECT ENGINEER

U6. THERE ARE POSSIBLE UTILITY CONFLICTS WITHIN THE PROJECT LIMITS. THE CONTRACTOR SHALL REQUEST UTILITY LOCATES PRIOR TO COMMENCING ANY TYPE OF EXCAVATION. BASED UPON THESE LOCATES CONSTRUCTION IMPROVEMENTS MAY NEED TO BE ADJUSTED AS DIRECTED BY THE PROJECT ENGINEER TO AVOID A UTILITY. HAND DIGGING MAY BE REQUIRED.

U7. A UTILITY PERMIT IS REQUIRED FOR ALL UTILITY WORK WITHIN CDOT RIGHT-OF-WAY.

PROJECT UTILITY CONTACTS

CDOT REGION 3(TRAFFIC SECTION)	MARC TRAVIS	970-683-7534
CDOT REGION 3 (ELECTRIC)	TYLER POTTORFF	970-712-4135
CDOT	JILL SCOTT	303-512-0385
CITY OF GRAND JUNCTION	TRENT PRALL	970-244-1590
CLIFTON WATER	DAVE REINARTSON	970-434-7328
GRAND VALLEY DRAINAGE	TIM RYAN	970-242-4343
GRAND VALLEY WATER USERS	KEVIN CONRAD	970-242-5065
GRAND VALLEY POWER	MIKE GARDNER	970-270-4213
LUMEN (TELEPHONE/FIBER)	CHRIS JOHNSON	970-244-4311
UTE WATER	DAVE PRISKE	970-242-7491
UNITE PRIVATE NETWORKS	AUSTIN SALAZAR	720-582-2650
XCEL ENERGY (ELECTRIC)	TILLMON MCSCHOOLER	970-244-2695
ZAYO	JEFF PAGE	303-335-8184
VARIOUS MEMBER UTILITIES		8-1-1 or 800-922-1987

INDEX BOOK	INDEX PAGE	INDEX SHEET	CONTRACT ITEM NO.	CONTRACT ITEM	UNIT	ROADWAY PLAN	ROADWAY AS CONST.	PROJECT TOTALS PLAN	PROJECT TOTALS AS CONST.
			202-00090	Removal of Delineator	EACH	847		847	
			202-00240	Removal of Asphalt Mat (Planing)	SY	260,787		260,787	
			202-00250	Removal of Pavement Marking	SF	63,506		63,506	
			202-00810	Removal of Ground Sign	EACH	3		3	
			202-01130	Removal of Guardrail Type 3	LF	4,000		4,000	
			202-01300	Removal of End Anchorage	EACH	13		13	
			203-01500	Blading	HOUR	20		20	
			203-01510	Backhoe	HOUR	10		10	
			203-01582	Truck (Dump)	HOUR	10		10	
			203-01597	Potholing	HOUR	20		20	
			203-02330	Laborer	HOUR	10		10	
			208-00002	Erosion Log Type 1 (12 Inch)	LF	200		200	
			208-00035	Aggregate Bag	LF	200		200	
			208-00103	Removal and Disposal of Sediment (Labor)	HOUR	20		20	
			208-00105	Removal and Disposal of Sediment (Equipment)	HOUR	20		20	
			208-00106	Sweeping (Sediment Removal)	HOUR	20		20	
			208-00107	Removal of Trash	HOUR	20		20	
			210-04030	Modify Guardrail	LF	112.5		112.5	
			212-00702	Biotic Soil Amendments (Hydraulically Applied)	LB	875		875	
			212-00707	Seeding (Native) Hydraulic	ACRE	0.25		0.25	
			213-00012	Spray-on Mulch Blanket	ACRE	0.25		0.25	
			403-34801	Hot Mix Asphalt (Grading SX) (100)	TON	29,594.89		29,594.89	
			411-03345	Asphalt Cement Performance Grade (PG 76-28)	TON	1,776.56		1,776.56	
			411-10255	Emulsified Asphalt (Slow-Setting)	GAL	15,062		15,062	
			518-03000	Sawing and Sealing Bridge Joint	LF	491		491	
			606-00301	Guardrail Type 3 (6-3 Post Spacing)	LF	300		300	
			606-00302	Guardrail Type 3 (31 Inch Midwest Guardrail System)	LF	3,625		3,625	
			606-01340	End Anchorage Type 3D	EACH	5		5	
			606-01370	Transition Type 3G	EACH	3		3	
			606-01460	Median Terminal	EACH	1		1	
			606-02005	End Anchorage (Flared)	EACH	7		7	
			612-00001	Delineator (Type I)	EACH	771		771	

All seals for this set of drawings are applied to the cover page(s)

Print Date: 3/17/2026
File Name: 27298_GN_DR-SAQ.dgn
Horiz. Scale: Vert. Scale: As Noted
Unit Information MSC

Sheet Revisions

Date:	Comments	Init.

Colorado Department of Transportation
606 South 9th Street
Grand Junction, co 81501
Phone: 970-683-6351
Fax: 970-683-6369
Region 3 KC

As Constructed
No Revisions:
Revised:
Void:

SUMMARY OF APPROXIMATE QUANTITIES

Designer: TS
Detailer: TS
Structure Numbers
Sheet Subset: SAQ
Subset Sheets: 1 of 003

Project No./Code
NHPP 0701-263
27298
Sheet Number 7

scismtb 7:26:52 AM pw:\\cdot-pw.bentley.com:cdot-pw-01p\Documents\02 Minor Projects\CDOT Collaboration Projects\27298 - 070a resurfacing mp 31.0-37.0\01 Pre-Construction\Drawings\Quantities and Tables\27298_GN_DR-SAQ.dgn

INDEX			CONTRACT ITEM NO.	CONTRACT ITEM	UNIT	ROADWAY																		PROJECT TOTALS	
BOOK	PAGE	SHEET				PLAN	AS CONST.																	PLAN	AS CONST.
			612-00002	Delineator (Type II)	EACH	40																		40	
			612-00003	Delineator (Type III)	EACH	36																		36	
			614-00011	Sign Panel (Class I)	SF	53																		53	
			614-00013	Sign Panel (Class III)	SF	33																		33	
			614-01573	Steel Sign Support (2-1/2 Inch Round NP-40)(Post & Slipbase)	EACH	5																		5	
			614-80391	Rumble Strip (Grinding)(Asphalt)	LF	86,213																		86,213	
			620-00002	Field Office (Class 2)	EACH	1																		1	
			620-00012	Field Laboratory (Class 2)	EACH	1																		1	
			620-00020	Sanitary Facility	EACH	1																		1	
			625-00001	Construction Surveying (Hourly)	HOUR	10																		10	
			626-00000	Mobilization	L S	1																		1	
			626-01103	Public Information Services (Tier III)	L S	1																		1	
			627-00008	Modified Epoxy Pavement Marking	GAL	746																		746	
			627-00013	Pavement Marking Paint (High Build)	GAL	959																		959	
			627-01010	Preformed Plastic Pavement Marking (Type I)(Inlaid)	SF	7,042																		7,042	
			627-30407	Preformed Thermoplastic Pavement Marking (Word-Symbol) (Special)	SF	152																		152	
			630-00000	Flagging	HOUR	2,500																		2,500	
			630-00007	Traffic Control Inspection	DAY	20																		20	
			630-00012	Traffic Control Management	DAY	55																		55	
			630-80341	Construction Traffic Sign (Panel Size A)	EACH	43																		43	
			630-80342	Construction Traffic Sign (Panel Size B)	EACH	213																		213	
			630-80343	Construction Traffic Sign (Panel Size C)	EACH	6																		6	
			630-80344	Construction Traffic Sign (Special)	SF	104																		104	
			630-80355	Portable Message Sign Panel	EACH	4																		4	
			630-80358	Advance Warning Flashing or Sequencing Arrow Panel (C Type)	EACH	5																		5	
			630-80360	Drum Channelizing Device	EACH	100																		100	
			630-80363	Drum Channelizing Device (With Light) (Flashing)	EACH	10																		10	
			630-80364	Drum Channelizing Device (With Light) (Steady Burn)	EACH	25																		25	
			630-80380	Traffic Cone	EACH	300																		300	
			630-80440	Portable Rumble Strips (Temporary)	EACH	24																		24	

All seals for this set of drawings are applied to the cover page(s)

Print Date: 3/17/2026
File Name: 27298_GN_DR-SAQ.dgn
Horiz. Scale: Vert. Scale: As Noted
Unit Information MSC

Sheet Revisions

Date:	Comments	Init.

Colorado Department of Transportation
606 South 9th Street
Grand Junction, co 81501
Phone: 970-683-6351
Fax: 970-683-6369
Region 3 KC

As Constructed
No Revisions:
Revised:
Void:

SUMMARY OF APPROXIMATE QUANTITIES

Designer: TS
Detailer: TS
Structure Numbers
Sheet Subset: SAQ
Subset Sheets: 2 of 003

Project No./Code
NHPP 0701-263
27298
Sheet Number 8

scismtb 7:26:53 AM pw:\\cdot-pw.bentley.com:cdot-pw-01p\Documents\02 Minor Projects\CDOT Collaboration Projects\27298 - 070a resurfacing mp 31.0-37.0\01 Pre-Construction\Drawings\Quantities and Tables\27298_GN_DR-SAQ.dgn

INDEX			CONTRACT ITEM NO.	CONTRACT ITEM	UNIT	ROADWAY																		PROJECT TOTALS	
BOOK	PAGE	SHEET				PLAN	AS CONST.																	PLAN	AS CONST.
			630-80511	Mobile Pavement Marking Zone	L S	1																		1	
			632-00000	Night Work Lighting	L S	1																		1	
				FORCE ACCOUNT ==========																					
			700-70010	F/A Minor Contract Revisions	F A	1																		1	
			700-70016	F/A Fuel Cost Adjustment	F A	1																		1	
			700-70018	F/A Roadway Smoothness Incentive	F A	1																		1	
			700-70019	F/A Asphalt Cement Cost Adjustment	F A	1																		1	
			700-70023	F/A On-The-Job Trainee	F A	1																		1	
			700-70025	F/A Quality Incentive Payment	F A	1																		1	
			700-70111	Project First Program	F A	1																		1	
			700-70380	F/A Erosion Control	F A	1																		1	
			700-73351	F/A Uniformed Traffic Control (CSP)	F A	1																		1	

All seals for this set of drawings are applied to the cover page(s)

Print Date: 3/17/2026
File Name: 27298_GN_DR-SAQ.dgn
Horiz. Scale: Vert. Scale: As Noted
Unit Information MSC

Sheet Revisions		
Date:	Comments	Init.

Colorado Department of Transportation
606 South 9th Street
Grand Junction, co 81501
Phone: 970-683-6351
Fax: 970-683-6369
Region 3 KC

As Constructed
No Revisions:
Revised:
Void:

SUMMARY OF APPROXIMATE QUANTITIES

Designer: TS
Detailer: TS
Structure Numbers
Sheet Subset: SAQ
Subset Sheets: 3 of 003

Project No./Code
NHPP 0701-263
27298
Sheet Number 9

scismtb 7:26:53 AM pw:\\cdot-pw.bentley.com:cdot-pw-01p\Documents\02 Minor Projects\CDOT Collaboration Projects\27298 - 070a resurfacing mp 31.0-37.0\01 Pre-Construction\Drawings\Quantities and Tables\27298_GN_DR-SAQ.dgn

TABULATION OF SURFACING

Notes															
DESCRIPTION	STATION	LENGTH (FT)	WIDTH (FT)	(202-00240) REMOVAL OF ASPHALT MAT (PLANING)		(202-00240) REMOVAL OF ASPHALT MAT (PLANING)		(403-34801) HOT MIX ASPHALT (GRADING SX) (100)		(403-34801) HOT MIX ASPHALT (GRADING SX) (100)		(411-03345) ASPHALT CEMENT PERFORMANCE GRADE (PG 76-28)		(411-10255) EMULSIFIED ASPHALT (SLOW-SETTING)	
				2 Inch Mill		1.5 Inch Mill		2 Inch Overlay		1.5 Inch Overlay		Overlay, 6.0% By Weight		0.055 Gal/SY	
				SY		SY		TON		TON		TON		GAL	
				Plan	As Const.	Plan	As Const.	Plan	As Const.	Plan	As Const.	Plan	As Const.	Plan	As Const.
I-70 WB	364+83		38												
		24,725		104,394				11,483.39				689.00		5,741.69	
	117+58		38												
		265		1,207				132.79				7.97		66.40	
	114+93		44												
		500		2,444				268.89				16.13		134.44	
	109+93		44												
	109+93		30												
		38		127				13.93				0.84		6.97	
	109+55		30												
H-02-EV		83		**SEE SUMMARY OF BRIDGE QUANTITIES**											
	108+72		30												
		184		613				67.47				4.05		33.73	
	106+88		30												
	106+88		44												
		688		2,752				302.72				18.16		151.36	
	100+00		28												
			SHEET 1 SUBTOTAL	111,537				12,269.19				736.15		6,134.60	

All seals for this set of drawings are applied to the cover page(s)

Print Date: 3/17/2026
File Name: 27298_GN_DR-Tabulations.dgn
Horiz. Scale: Vert. Scale: As Noted
Unit Information MSC

Sheet Revisions

Date:	Comments	Init.

Colorado Department of Transportation
606 South 9th Street
Grand Junction, co 81501
Phone: 970-683-6351
Fax: 970-683-6369
Region 3 KC

As Constructed
No Revisions:
Revised:
Void:

TABULATION OF SURFACING

Designer: TS
Detailer: TS
Sheet Subset: TABS
Structure Numbers
Subset Sheets: 1 of 006

Project No./Code
NHPP 0701-263
27298
Sheet Number 10

scismtb 7:27:05 AM pw:\\cdot-pw.bentley.com:cdot-pw-01p\Documents\02 Minor Projects\CDOT Collaboration Projects\27298 - 070a resurfacing mp 31.0-37.0\01 Pre-Construction\Drawings\Quantities and Tables\27298_GN_DR-Tabulations.dgn

TABULATION OF SURFACING

DESCRIPTION	STATION	LENGTH (FT)	WIDTH (FT)	(202-00240) REMOVAL OF ASPHALT MAT (PLANING)		(202-00240) REMOVAL OF ASPHALT MAT (PLANING)		(403-34801) HOT MIX ASPHALT (GRADING SX) (100)		(403-34801) HOT MIX ASPHALT (GRADING SX) (100)		(411-03345) ASPHALT CEMENT PERFORMANCE GRADE (PG 76-28)		(411-10255) EMULSIFIED ASPHALT (SLOW-SETTING)	
			Notes												
				2 Inch Mill		1.5 Inch Mill		2 Inch Overlay		1.5 Inch Overlay		Overlay, 6.0% By Weight		0.055 Gal/SY	
				SY		SY		TON		TON		TON		GAL	
				Plan	As Const.	Plan	As Const.	Plan	As Const.	Plan	As Const.	Plan	As Const.	Plan	As Const.
I-70 EB	1000+00		28												
		765		2,805				308.55				18.51		154.28	
	1007+65		38												
	1007+65		28												
		151		470				51.68				3.10		25.84	
	1009+16		28												
H-02-EW		79		**SEE SUMMARY OF BRIDGE QUANTITIES**											
	1009+95		28												
		120		373				41.07				2.46		20.53	
	1011+15		28												
	1011+15		44												
		732		3,497				384.71				23.08		192.35	
	1018+47		42												
		353		1,589				174.74				10.48		87.37	
	1022+00		39												
		24,000		104,000				11,440.00				686.40		5,720.00	
	1262+00		39												
		417		1,969				216.61				13.00		108.30	
	1266+17		46												
		797		4,118				452.96				27.18		226.48	
	1274+14		47												
	1274+14		29												
		168		541				59.55				3.57		29.77	
	1275+82		29												
	1275+82		43												
		1,198		5,724				629.62				37.78		314.81	
	1287+80		43												
	1287+80		29												
		260		838				92.16				5.53		46.08	
	1290+40		29												
	1290+40		46												
		814		4,160				457.65				27.46		228.82	
	1298+54		46												
			SHEET 2 SUBTOTAL	**130,084**				**14,309.27**				**858.56**		**7,154.64**	
			SHEET 1 SUBTOTAL	**111,537**				**12,269.19**				**736.15**		**6,134.60**	
EXIT 31 EB OFF RAMP						1,843				152.04		9.12		101.36	
EXIT 31 WB ON RAMP						1,886				155.62		9.34		103.74	
EXIT 31 WB OFF RAMP						3,322				274.07		16.44		182.72	
EXIT 31 EB ON RAMP						3,012				248.53		14.91		165.68	
EXIT 37 EB OFF RAMP						2,530				208.76		12.53		139.17	
EXIT 37 EB ON RAMP						5,638				465.14		27.91		310.09	
			PROJECT SUBTOTAL	**241,621**		**18,232**		**26,578.46**		**1,504.15**		**1,684.96**		**14,292**	
			CARRIED OVER FROM BRIDGE SHEETS	934				103.00				7.00		53	
			5% IRREGULARITIES (HMA)					1,334.07		75.21		84.60		717	
			PROJECT TOTAL	**260,787**				**29,594.89**				**1,776.56**		**15,062**	

All seals for this set of drawings are applied to the cover page(s)

Print Date: 3/17/2026
File Name: 27298_GN_DR-Tabulations.dgn
Horiz. Scale: Vert. Scale: As Noted
Unit Information MSC

Sheet Revisions

Date:	Comments	Init.

Colorado Department of Transportation
606 South 9th Street
Grand Junction, co 81501
Phone: 970-683-6351
Fax: 970-683-6369
Region 3 KC

As Constructed
No Revisions:
Revised:
Void:

TABULATION OF SURFACING

Designer: TS
Detailer: TS
Sheet Subset: TABS
Structure Numbers
Subset Sheets: 2 of 006

Project No./Code
NHPP 0701-263
27298
Sheet Number 11

scismtb 7:27:06 AM pw:\\cdot-pw.bentley.com:cdot-pw-01p\Documents\02 Minor Projects\CDOT Collaboration Projects\27298 - 070a resurfacing mp 31.0-37.0\01 Pre-Construction\Drawings\Quantities and Tables\27298_GN_DR-Tabulations.dgn

TABULATION OF GUARDRAIL

BEGINNING STATION	END STATION	OFFSET	DESCRIPTION	EXIST LENGTH INCLUDING END SECTIONS	NEW GUARDRAIL TYPE 3 ADDED	EST. EMBANKMENT MATERIAL (INFO ONLY)	EST. HMA MATERIAL (INFO ONLY)	202-01130 REMOVAL OF GUARDRAIL TYPE 3		202-01300 REMOVAL OF END ANCHORAGE		210-04030 MODIFY GUARDRAIL		606-00301 GUARDRAIL TYPE 3 (6-3 POST SPACING)		606-00302 GUARDRAIL TYPE 3 (31 INCH MIDWEST GUARDRAIL SYSTEM)		606-01340 END ANCHORAGE TYPE 3D		606-01370 TRANSITION TYPE 3G		606-01460 MEDIAN TERMINAL		606-02005 END ANCHORAGE (FLARED)		COMMENTS
			NOTES			8		2		3				9		4		4		4		4		4		
								LF		EACH		LF		LF		LF		EACH		EACH		EACH		EACH		
				LF	LF	CY	SY	PLAN	AS CONST.	PLAN	AS CONST.	PLAN	AS CONST.	PLAN	AS CONST.	PLAN	AS CONST.	PLAN	AS CONST.	PLAN	AS CONST.	PLAN	AS CONST.	PLAN	AS CONST.	
I-70 WESTBOUND																										
100+33	100+08	LT	WB BRIDGE MEDIAN APPROACH					25.0												1						REPLACE DAMAGED TRANSITION TYPE 3G.
102+38	100+00	RT	WB BRIDGE APPROACH					25.0		1										1				1		REPLACE DAMAGED TRANSITION TYPE 3G AND END ANCHORAGE.
114+70	114+33	RT	WB BRIDGE APPROACH			45				1														1		REPLACE DAMAGED END ANCHORAGE.
153+82	154+20	RT										37.5														REPLACE DAMAGED BLOCKS. EXISTING BLOCKS ARE 8 INCHES.
195+63	194+13	LT	MEDIAN BRIDGE PIER	150.0				100.0		1				100								1				REMOVAL OF END ANCHORAGE QUANTITY INCLUDES REMOVAL OF MEDIAN TERMINAL.
328+04	326+91	RT					70	75.0		1				75										1		
350+79	342+16	RT		862.5		45	70	825.0		2						825.0		1						1		7 FOOT POSTS REQUIRED.
I-70 EASTBOUND																										
1008+93	1009+18	LT	EB BRIDGE APPROACH									25														REPLACE DAMAGED BLOCKS ON 3G TRANSITION.
1010+31	1010+56	RT	EB BRIDGE DEPARTURE									25														REPLACE DAMAGED BLOCKS ON 3G TRANSITION.
1038+94	1039+07	RT										12.5														REPLACE DAMAGED BLOCKS.
1048+34	1056+84	RT		850.0			70	812.5		2						812.5		1						1		
1180+17	1181+42	RT		125.0				125.0		1				125				1								
1217+25	1227+38	RT		1012.5				1012.5		1						1012.5		1								
1240+73	1250+86	RT		1012.5				975.0		2						975.0		1						1		
1264+50	1264+63	RT										12.5														REMOVE AND REPLACE DAMAGED POSTS.
1278+29	1278+92	RT	BRIDGE PIER	62.5				25.0		1										1				1		
			TOTAL					**4000**		**13**		**112.5**		**300**		**3625**		**5**		**3**		**1**		**7**		

NOTES:

1. GUARDRAIL HEIGHT TRANSITION SHALL BE PAID FOR AS GUARDRAIL TYPE 3.
2. REMOVAL OF EXISTING TRANSITIONS SHALL BE PAID FOR AS REMOVAL OF GUARDRAIL TYPE 3.
3. REMOVAL OF END ANCHORAGE PAY ITEM INCLUDES THE REMOVAL OF 37.5' LONG END SECTIONS (FLARED), TYPE 3B END SECTION, TYPE 3D END SECTIONS, AND MEDIAN TERMINALS.
4. ALL GUARDRAIL AND END SECTIONS SHALL BE GALVANIZED STEEL. COMPOSITE BLOCKS AND STEEL POSTS SHALL BE USED ON ALL GUARDRAIL TYPE 3 (6-3 POST SPACING) INSTALLATIONS.
5. THE CONTRACTOR SHALL NOT REMOVE MORE GUARDRAIL OR END ANCHORAGES THAN CAN BE REPLACED THE SAME DAY.
7. GUARDRAIL TYPE 3, TRANSITIONS, END ANCHORAGES, AND WIDENING FOR END ANCHORAGES SHALL COMPLY WITH STANDARD PLAN NO. M-606-1 MIDWEST GUARDRAIL SYSTEM (MGS) TYPE 3 W-BEAM 31 INCHES.
8. FOR INFORMATION ONLY. EMBANKMENT MATERIAL WILL NOT BE MEASURED AND PAID FOR SEPARATELY, BUT SHALL BE INCIDENTAL TO ITEM 606 - END ANCHORAGE.
9. FULL GUARDRAIL RUN IS NOT BEING REPLACED. DAMAGED GUARDRAIL THAT IS REPLACED SHALL BE REPLACED IN KIND AND TIE INTO THE EXISTING GUARDRAIL RUN.

TABULATION OF PAVEMENT MARKINGS

LOCATION	STATION	(202-00250) REMOVAL OF PAVEMENT MARKING					(627-00008) MODIFIED EPOXY PAVEMENT MARKING APPLICATION RATE - 85 SF/GAL					(627-00013) PAVEMENT MARKING PAINT (HIGH BUILD) APPLICATION RATE - 100 SF/GAL					(627-01010) PREFORMED PLASTIC PAVEMENT MARKING (TYPE I)(INLAID)	
		YELLOW SOLID	AUX LINES	WHITE DOTTED	WHITE SKIP	WHITE SOLID	YELLOW SOLID	AUX LINES	WHITE DOTTED	WHITE SKIP	WHITE SOLID	YELLOW SOLID	AUX LINES	WHITE DOTTED	WHITE SKIP	WHITE SOLID	WHITE SKIP	
		6 INCH	8 INCH	8 INCH	6 INCH	6 INCH	6 INCH	8 INCH	8 INCH	6 INCH	6 INCH	4 INCH	8 INCH	8 INCH	4 INCH	4 INCH	6 INCH	
I-70 WESTBOUND	100+00 - 364+83	26,498	314	503		26,152	26,498	314	503		26,152	26,498	314	503	26,483	26,152	26,483	
I-70 EASTBOUND	1000+00 - 1298+54	29,833	810	1,648		29,158	29,833	810	1,648		29,158	29,833	810	1,648	29,854	29,158	29,854	
EXIT 31	EASTBOUND OFF RAMP	280	620		121	580	280	620		121	580	280	620		121	580		
	WESTBOUND ON RAMP	456	490			707	456	490			707	456	490			707		
	WESTBOUND OFF RAMP	440	445		121	795	440	445		121	795	440	445		121	795		
	EASTBOUND ON RAMP	464	456		80	740	464	456		80	740	464	456		80	740		
EXIT 37	EASTBOUND OFF RAMP	430	328			797	430	328			797	430	328			797		
	EASTBOUND ON RAMP	1,386	375			1,838	1,386	375			1,838	1,386	375			1,838		
TOTAL (LF) =		59,787	3,838	2,151	322	60,767	59,787	3,838	2,151	322	60,767	59,787	3,838	2,151	56,659	60,767	56,337	
NUMBER OF APPLICATIONS =							1					2					1	
ADJUSTED TOTAL (LF) =							59,787	3,838	2,151	322	60,767	119,574	7,676	4,302	113,318	121,534	56,337	
LINEAR TO SQUARE FOOT MODIFIER		1/2	2/3	2/9	1/8	1/2	1/2	2/3	2/9	1/8	1/2	1/3	2/3	2/9	1/12	1/3	1/8	
TOTAL (SF) =		29,894	2,559	478	40	30,384	29,894	2,559	478	40	30,384	39,858	5,117	956	9,443	40,511	7,042	
TOTAL (GAL) =							**352**	**394**				**399**	**560**					
		PROJECT TOTAL (SF)					**PROJECT TOTAL (GAL)**					**PROJECT TOTAL (GAL)**					**PROJECT TOTAL (SF)**	
		Plan		As Const.			Plan		As Const.			Plan			As Const.		Plan	As Const.
CARRIED TO TAB. THERMOPLASTIC		**63,354**																
PROJECT TOTAL							**746**					**959**					**7,042**	

TABULATION OF THERMOPLASTIC

LOCATION		ARROW LEFT TURN (16.1 SF PER SYMBOL)		ARROW RIGHT TURN (16.1 SF PER SYMBOL)		ARROW STRAIGHT-LEFT (32.1 SF PER SYMBOL)		ARROW STRAIGHT-RIGHT (32.1 SF PER SYMBOL)		ARROW STRAIGHT-LEFT-RIGHT (39.8 SF PER SYMBOL)		(202-00250) REMOVAL OF PAVEMENT MARKING		(627-30407) PREFORMED THERMOPLASTIC PAVEMENT MARKING (WORD-SYMBOL) (SPECIAL)	
		NO.	TOTAL SF	NO.	TOTAL SF	NO.	TOTAL SF	NO.	TOTAL SF	NO.	TOTAL SF	SF		SF	
												Plan	As Const.	Plan	As Const.
EXIT 31	EASTBOUND OFF RAMP					1	32.1	1	32.1			64.2		64.2	
EXIT 31	WESTBOUND OFF RAMP	1	16.1	2	32.2					1	39.8	88.1		88.1	
SUBTOTAL												152		152	
CARRIED OVER FROM TAB . OF PAVEMENT MARKINGS												63,354			
PROJECT TOTAL												**63,506**		**152**	

All seals for this set of drawings are applied to the cover page(s)

Print Date: 3/17/2026
File Name: 27298_GN_DR-Tabulations.dgn
Horiz. Scale: 1"=XX' Vert. Scale: As Noted
Unit Information MSC

Sheet Revisions

Date:	Comments	Init.

Colorado Department of Transportation
606 South 9th Street
Grand Junction, co 81501
Phone: 970-683-6351
Fax: 970-683-6369
Region 3 KC

As Constructed
No Revisions:
Revised:
Void:

TABULATION OF PAVEMENT MARKINGS

Designer: TS
Detailer: TS
Sheet Subset: TABS
Structure Numbers
Subset Sheets: 4 of 006

Project No./Code
NHPP 0701-263
27298
Sheet Number 13

scismtb 7:27:08 AM pw:\\cdot-pw.bentley.com:cdot-pw-01p\Documents\02 Minor Projects\CDOT Collaboration Projects\27298 - 070a resurfacing mp 31.0-37.0\01 Pre-Construction\Drawings\Quantities and Tables\27298_GN_DR-Tabulations.dgn

TABULATION OF RUMBLE STRIPS

STATION	DESCRIPTION	(614-80391) RUMBLE STRIP (GRINDING)(ASPHALT) LF
WESTBOUND		
393+00 - 359+23	LT/RT EDGE LINE	39,199
356+22 - 344+82	LT EDGE LINE	972
343+53 - 341+67	LT/RT EDGE LINE	845
341+67 - 335+57	LT EDGE LINE	193
EASTBOUND		
100000 -100844.8	LT/RT EDGE LINE	1,352
1007+31 - 1077+94	LT EDGE LINE	1,014
1077+94 - 1083+68	LT/RT EDGE LINE	38,776
1083+68 - 1088+93	LT EDGE LINE	845
1088+93 - 1093+37	LT/RT EDGE LINE	2,112
1093+37 - 1226+75	LT EDGE LINE	905
PROJECT TOTAL		**86,213**

TABULATION OF DELINEATORS

NOTES			1		1			
STATION	(202-00090) REMOVAL OF DELINEATOR		(612-00001) DELINEATOR (TYPE I)		(612-00002) DELINEATOR (TYPE II)		(612-00003) DELINEATOR (TYPE III)	
	EACH		EACH		EACH		EACH	
	Plan	As Const	Plan	As Const	Plan	As Const	Plan	As Const
I-70 WESTBOUND								
100+00 - 364+83	390		353		20		17	
I-70 EASTBOUND								
1000+00 - 1298+54	387		352		20		15	
RAMPS	70		66		0		4	
PROJECT TOTAL	**847**		**771**		**40**		**36**	
DELINEATOR REFLECTOR COLOR QUANTITY (FOR INFO ONLY)		CRYSTAL	743		40			
		YELLOW	15				8	
		GREEN	28				28	
		RED	20					

NOTES:
1. ALL DELINEATORS SHALL BE SINGLE SIDED.

TABULATION OF PERMANENT SIGNING

STATION	OFFSET	DIMENSIONS (W x H) (INCHES)			SIGN CODE	LEGEND	(202-00810) REMOVAL OF GROUND SIGN		(614-00011) SIGN PANEL (CLASS I)		(614-00013) SIGN PANEL (CLASS III)		(614-01573) STEEL SIGN SUPPORT (2-1/2 INCH ROUND NP-40) (POST&SLIPBASE)		COMMENTS
							EACH		SF		SF		EACH		
							Plan	As Const	Plan	As Const	Plan	As Const	Plan	As Const	
I-70 EASTBOUND															
1275+93	RT						2								EXISTING CHEVRON AND EXIT 37 SIGN
1269+02	RT						1								EXISTING EXIT ADVISORY SPEED SIGN.
1267+09	RT	36	x	66	W13-6R	ADVISORY EXIT (35 MPH)			17				1		INCLUDE TEE BRACKET
1274+16	RT	36	x	66	W13-6R	ADVISORY EXIT (35 MPH)			17				1		INCLUDE TEE BRACKET
1275+93	31 RT	78	x	60	E5-1a	EXIT 37					33		2		
1276+19	47 RT	60	x	30	W1-6R	LARGE ARROW (RIGHT)			13				1		INCLUDE TEE BRACKET
1276+19	47 RT	60	x	18	W13-1aP	ADVISORY SPEED CONFIRMATION (PLAQUE)			8						ATTACHED TO W1-6R
						PROJECT TOTAL	3		53		33		5		

NOTES:
1. OFFSETS FOR EXIT SIGNAGE ARE APPROXIMATE. GROUND SIGNS SHALL BE PLACED IN ACCORDANCE WITH S-614-1 AND SHALL NOT INHIBIT VISIBILITY OF NEW OR EXISITING SIGNAGE.

scismb 7:27:10 AM pw:\\cdot-pw.bentley.com:cdot-pw-01p\Documents\02 Minor Projects\CDOT Collaboration Projects\27298 - 070a resurfacing mp 31.0-37.0\01 Pre-Construction\Drawings\Quantities and Tables\27298_GN_DR-Tabulations.dgn

TABULATION OF CONSTRUCTION TRAFFIC CONTROL SIGNS

SIGN CODE	LEGEND	DIMENSION (INCHES)			PAY ITEMS (630-80341) CONSTRUCTION TRAFFIC SIGN (PANEL SIZE A) EACH		(630-80342) CONSTRUCTION TRAFFIC SIGN (PANEL SIZE B) EACH		(630-80343) CONSTRUCTION TRAFFIC SIGN (PANEL SIZE C) EACH		(630-80344) CONSTRUCTION TRAFFIC SIGN (SPECIAL) SF	
					Plan	As Const	Plan	As Const	Plan	As Const	Plan	As Const
E5-2a	EXIT CLOSED	48	X	36			6					
G20-1	ROAD / WORK / NEXT_XX_MILES	60	X	36			4					
G20-2	END ROAD WORK	48	X	24	4							
G20-5P	WORK ZONE	36	X	24	18							
G20-10	XYZ THANKS YOU	48	X	30							40	
*G20-11	CONSTRUCTION INFORMATION	48	X	48							64	
R1-2	YIELD	48	X	48	1							
R2-1(25)	SPEED / LIMIT / 25	36	X	48			8					
R2-1(35)	SPEED / LIMIT / 35	36	X	48			8					
R2-1(45)	SPEED / LIMIT / 45	36	X	48			8					
R2-1(50)	SPEED / LIMIT / 50	36	X	48			8					
R2-1(55)	SPEED / LIMIT / 60	36	X	48			8					
R2-1(75)	SPEED / LIMIT / 75	36	X	48			8					
R2-6P	FINES DOUBLE	36	X	36	8							
R4-1	DO / NOT / PASS	36	X	48			6					
R4-2	PASS / WITH / CARE	36	X	48			6					
R2-10	BEGIN DOUBLE FINES ZONE	36	X	48			6					
R2-11	END DOUBLE FINES ZONE	36	X	48			6					
W3-4	BE / PREPARED / TO STOP	48	X	48			6					
W4-1	MERGE	48	X	48			3					
W4-2	LANE ENDS	48	X	48			6					
W4-3	ADDED LANE	48	X	48			3					
W4-50	USE BOTH LANES DURING CONGESTION	72	X	48					6			
W4-51	USE BOTH LANES TO MERGE POINT	36	X	48			6					
W4-52	TAKE TURNS MERGE HERE	48	X	48			2					
W5-1	ROAD NARROWS	48	X	48			6					
W5-4	RAMP NARROWS	48	X	48			5					
W7-3a(X)	NEXT / X MILES	24	X	18	6							
W8-1	BUMP	48	X	48			6					
W8-9a	SHOULDER DROP OFF	48	X	48			4					
W12-55	MOTORCYCLES / USE EXTREME / CAUTION	48	X	48			6					
W13-2(XX)	EXIT SPEED	36	X	48			5					
W13-3(XX)	RAMP SPEED	36	X	48			5					
W16-2P	XX FT	24	X	12	6							
W20-1	ROAD / WORK / (DIST)	48	X	48			6					
W20-1	ROAD / WORK / AHEAD	48	X	48			8					
W20-4	ONE LANE / ROAD / (DIST)	48	X	48			6					
W20-5	RIGHT/LEFT LANE CLOSED	48	X	48			6					
W20-7	FLAGGER (SYMBOL)	48	X	48			6					
W20-52	GROOVED / PAVEMENT / AHEAD	48	X	48			4					
W20-63	RAMP / WORK / AHEAD	48	X	48			5					
W20-70	RUMBLE / STRIPS / AHEAD	48	X	48			4					
W21-5	SHOULDER / WORK	48	X	48			6					
W21-20	HIGHWAY PAINTING AHEAD	49	X	49			1					
W21-5a	RIGHT/LEFT SHOULDER CLOSED	48	X	48			12					
W21-13R	UNEVEN LANES SYMBOL	48	X	48			4					
				PROJECT TOTAL	**43**		**213**		**6**		**104**	

* SEE PROJECT SPECIAL PROVISIONS - PUBLIC INFORMATION SPECIFICATION

TABULATION OF CONSTRUCTION TRAFFIC CONTROL DEVICES

	ITEM	UNIT	Plan	As Const	NOTES
630-00000	FLAGGING	HOUR	2,500		9 FLAGGERS @ 10 HOUR DAYS FOR DURATION OF WORKING DAYS ON RAMPS
630-00007	TRAFFIC CONTROL INSPECTION	DAY	20		BASED ON (WORKING DAYS/5-1)*2
630-00012	TRAFFIC CONTROL MANAGEMENT	DAY	55		BASED ON DAYS OF CONSTRUCTION
630-80355	PORTABLE MESSAGE SIGN PANEL	EACH	4		2 PANELS FOR EB/WB, 2 PANELS FOR EXIT 31/EXIT 37
630-80358	ADVANCED WARNING FLASHING OR SEQUENCING ARROW PANEL (C TYPE)	EACH	5		3 PANELS FOR EB/WB, 2 PANELS FOR EXIT 31/EXIT 37
630-80360	DRUM CHANNELIZING DEVICE	EACH	100		
630-80363	DRUM CHANNELIZING DEVICE (WITH LIGHT) (FLASHING)	EACH	10		
630-80364	DRUM CHANNELIZING DEVICE (WITH LIGHT) (STEADY BURN)	EACH	25		
630-80380	TRAFFIC CONE	EACH	300		
630-80440	PORTABLE RUMBLE STRIPS (TEMPORARY)	EACH	24		
630-80511	MOBILE PAVEMENT MARKING ZONE	LS	1		
632-00000	NIGHT WORK LIGHTING	LS	1		

All seals for this set of drawings are applied to the cover page(s)

Print Date: 3/17/2026
File Name: 27298_GN_DR-Tabulations.dgn
Horiz. Scale: 1"=XX' Vert. Scale: As Noted
Unit Information MSC

Sheet Revisions

Date:	Comments	Init.

Colorado Department of Transportation
606 South 9th Street
Grand Junction, co 81501
Phone: 970-683-6351
Fax: 970-683-6369
Region 3 KC

As Constructed
No Revisions:
Revised:
Void:

TABULATION OF TRAFFIC CONTROL DEVICES

Designer: TS
Detailer: TS
Sheet Subset: TABS
Structure Numbers
Subset Sheets: 6 of 006

Project No./Code
NHPP 0701-263
27298
Sheet Number 15

scismtb 7:27:11 AM pw:\\cdot-pw.bentley.com:cdot-pw-01p\Documents\02 Minor Projects\CDOT Collaboration Projects\27298 - 070a resurfacing mp 31.0-37.0\01 Pre-Construction\Drawings\Quantities and Tables\27298_GN_DR-Tabulations.dgn

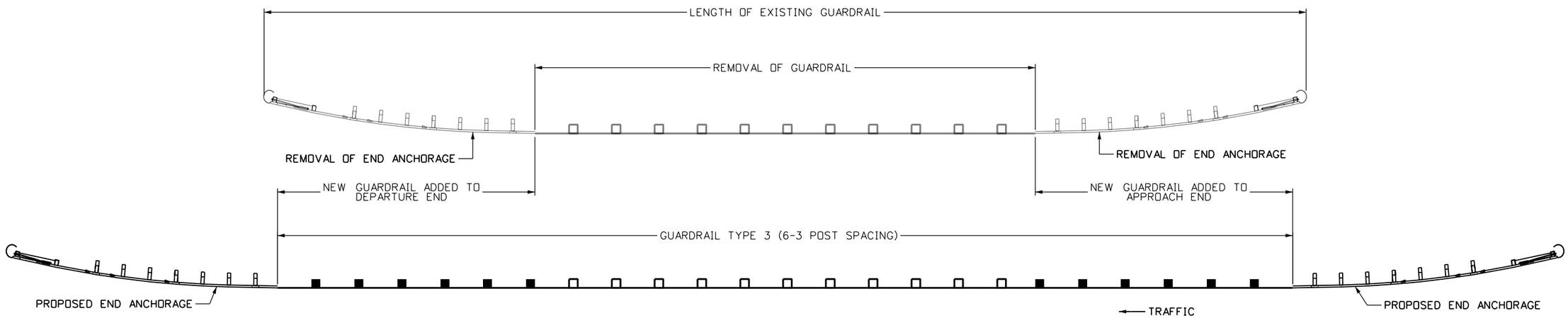

GUARDRAIL MEASUREMENTS/LAYOUT

NTS

NOTES:
1. GUARDRAIL IS TO BE INSTALLED AT THE SAME OFFSET FROM LANE LINE AS THE EXISTING RAIL. DRAWING SHOWN WITH OFFSET FOR CLARITY OF DIMENSIONS ONLY.
2. SEE GUARDRAIL TABULATION SHEET FOR REMOVAL OF GUARDRAIL AND PROPOSED GUARDRAIL DIMENSIONS.

All seals for this set of drawings are applied to the cover page(s)

Print Date: 3/17/2026
File Name: 27298_RD_DR-Details.dgn
Horiz. Scale: NTS Vert. Scale: As Noted
Unit Information MSC

Sheet Revisions		
Date:	Comments	Init.

Colorado Department of Transportation
606 South 9th Street
Grand Junction, Co 81501
Phone: 970-683-6351
Fax: 970-683-6369
Region 3 KC

As Constructed
No Revisions:
Revised:
Void:

GUARDRAIL LAYOUT

Designer: TS
Detailer: TS
Sheet Subset: GRAIL
Structure Numbers
Subset Sheets: 1 of 1

Project No./Code
NHPP 0701-263
27298
Sheet Number 16

scismtb 7:27:23 AM pw:\\cdot-pw.bentley.com:cdot-pw-01p\Documents\02 Minor Projects\CDOT Collaboration Projects\27298 - 070a resurfacing mp 31.0-37.0\01 Pre-Construction\Drawings\Roadway\27298_RD_DR-Details.dgn

GENERAL NOTES

1. All work shall be done in accordance with the latest edition of the Colorado Department of Transportation Standard Specifications for Road and Bridge Construction anc as noted in the drawings.
2. The Contractor shall be responsible for the stability of the structure during all phases of construction.
3. Unless otherwise noted, dimensions contained in these plans are calculated from the "As Constructed Plans". These dimensions may be adjusted to meet the existing structure. The Contractor shall verify all dependent dimensions in the field before ordering or fabricating any material.
4. All longitudinal and transverse dimensions are measured horizontally and include no correction for grade.
5. Overlay of planed deck areas shall be completed within 14 calendar days following the removal of asphalt planing, unless otherwise approved by the Engineer.
6. Unless noted otherwise on the plans, the proposed overlay shall be placed to the grade and cross slope of the existing concrete deck.
7. All saw water, coring waste, concrete washout and any other construction debris shall be collected and disposed of off site in accordance with all applicable Federal, State, and Local Regulations at no additional cost to the project. Under no circumstances shall such material be allowed to enter any natural or manmade water way or storm drain.
8. The Contractor shall protect pedestrians and traveling public from any falling debris during the construction work. Any debris which falls on paths or roadways shall be removed immediately. This work will not be measured and paid for separately, but shall be included in the cost of the work.
9. The Contractor shall take all steps to avoid contaminating state waters, in accordance with subsection 107.25.
10. Damage to the existing structures occurring as a result of any activities related to performing the work described in these plans shall be repaired at the Contractor's expense, following all applicable CDOT Specifications and Standards.

DESIGN DATA

AASHTO, Tenth Edition LRFD with current interims

Structural Steel:

AASHTO M270 Grade 36 (ASTM A709)	fy = 36,000 psi
AASHTO Grade 50 (ASTM A-992/A-572)	fy = 50,000 psi
ASTM A1085	fy = 50,000 psi

SUMMARY OF QUANTITIES

Item No.	Description	Unit	Quantities		Total
			H-02-EV	H-02-EW	
202-00240	Removal of Asphalt Mat (Planing)	SY	456	478	934
403-34801	Hot Mix Asphalt (Grading SX)(100)	Ton	50	53	103
411-03342	Asphalt Cement Performance Grade (PG 76-28)	Ton	3	4	7
411-10255	Emulsified Asphalt (Slow-setting)	Gal	26	27	53
518-03000	Sawing and Sealing Bridge Joint	LF	240	251	491

BRIDGE DESCRIPTION

H-02-EV
Existing 3 span (11'-6", 55'-5", 11'-6") composite CSG bridge supporting the two lanes of I-70 west bound over Highline Canal, with a skew of 58° 00'0", an out-to-out width varying from 49'-7¼" to 57'-0¾" and a curb width of 1'-3" with bridge rail type 10R.

H-02-EW
Existing 3 span (11'-6", 55'-5", 11'-6") composite CSG bridge supporting the two lanes of I-70 east bound over Highline Canal, with a skew of 58° 00'0", an out-to-out width varying from 53'-4¾" to 59'-4¾" and a curb width of 1'-3" with bridge rail type 10R.

H-02-EX
Existing 4 span (37'-0", 50'-0", 50'-0", 46'-0") composite CSGC bridge supporting the two lanes of I-70 west bound over Horizon Drive Road, with a skew of 77° 50'0", an out-to-out width of 34'-0", a curb-to-curb width of 30'-0", and a curb width of 2'-0" with bridge rail type 10R.

INDEX OF DRAWINGS

B01 GENERAL INFORMATION AND SUMMARY OF QUANTITIES
B02 H-02-EV GENERAL LAYOUT
B03 H-02-EW GENERAL LAYOUT
B04 H-02-EX GENERAL LAYOUT
B05 TRANSITION DETAILS

INITIALS	DESIGN	DATE	DETAIL	DATE	QUANTITY	DATE
By	CF	01/26	CF	01/26	CF	01/26
Checked By	AA	02/26	AA	02/26	AA	02/26

All seals for this set of drawings are applied to the cover page(s)

Print Date: 3/12/2026
File Name: 27298_B01_General Information.dgn
Horiz. Scale: Varies Vert. Scale: As Noted
Unit Information MSC

Sheet Revisions

Date:	Comments	Init.

Colorado Department of Transportation
606 South 9th Street
Grand Junction, co 81501
Phone: 970-683-6351
Fax: 970-683-6369
Region 3 KC

As Constructed
No Revisions:
Revised:
Void:

GENERAL INFORMATION

Designer: C. Ferrari
Detailer: C. Ferrari
Sheet Subset: Bridge
Structure Numbers: H-02-EV, H-02-EW, H-02-EX
Subset Sheets: B01 of 5

Project No./Code
NHPP 0701-263
27298
Sheet Number 17

ferraric| 8:13:06 AM pw:\\cdot-pw.bentley.com:cdot-pw-01p\Documents\02 Minor Projects\CDOT Collaboration Projects\27298 - 070a resurfacing mp 31.0-37.0\01 Pre-Construction\Drawings\Structures\27298_B01_General Information.dgn

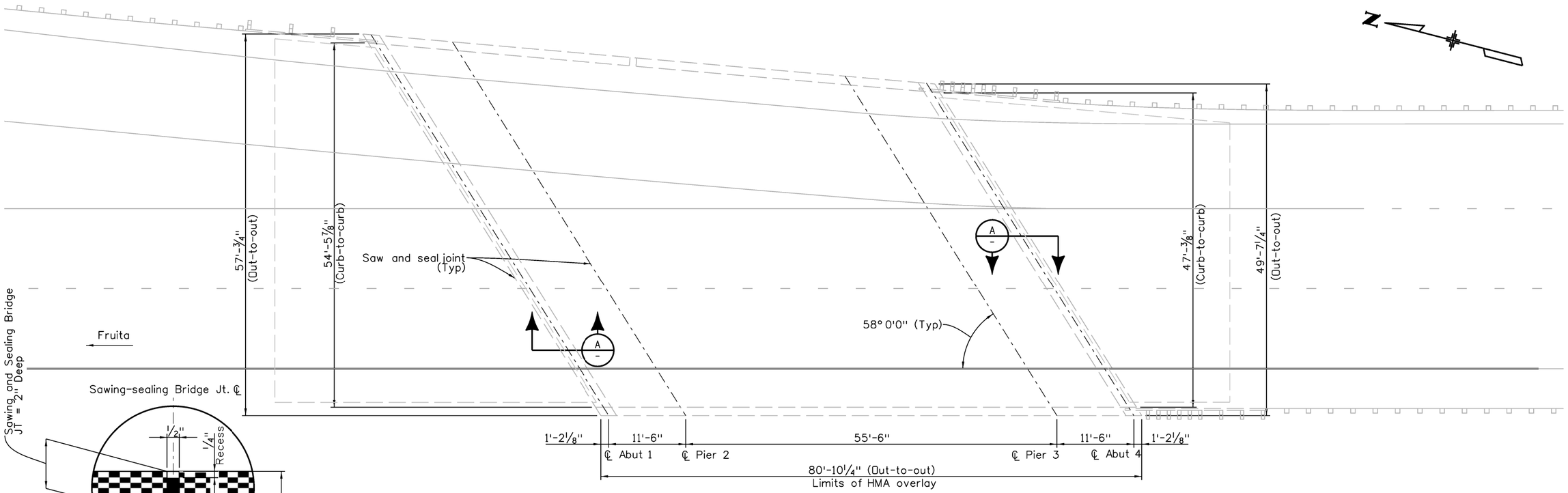

GENERAL LAYOUT

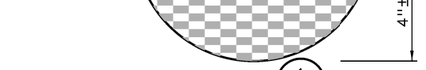

DETAIL 1

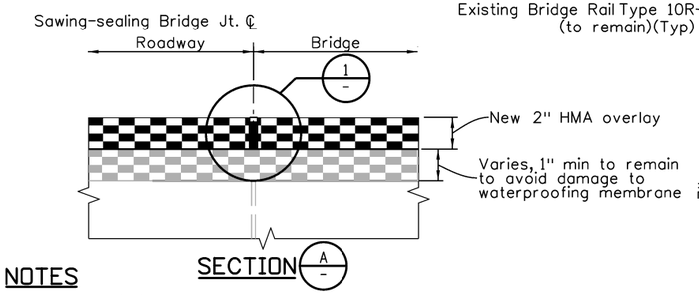

SECTION A

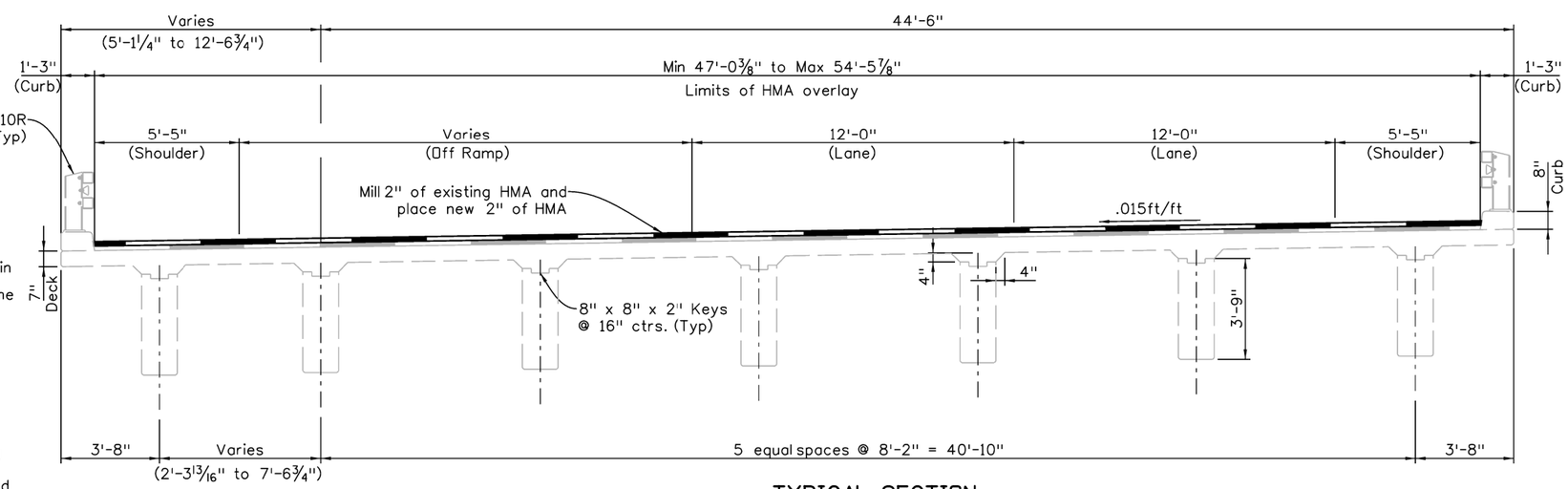

TYPICAL SECTION

NOTES

1. Mill 2" of existing HMA and place new 2" of HMA.
2. Per the latest bridge inspection report, existing bridge has about 4" of HMA overlay over waterproofing membrane. Contractor shall determine the existing conditions to prevent any damage to the existing membrane during asphalt removal operations. Any damages made to existing membrane shall be repaired at no additional cost to the project.

INITIALS	DESIGN	DATE	DETAIL	DATE	QUANTITY	DATE
By	CF	01/26	CF	01/26	CF	01/26
Checked By	AA	02/26	AA	02/26	AA	02/26

All seals for this set of drawings are applied to the cover page(s)

Print Date: 3/11/2026
File Name: 27298_B02_Gereral Layout H-02-EV.dgn
Horiz. Scale: Varies Vert. Scale: As Noted
Unit Information MSC

Sheet Revisions		
Date:	Comments	Init.

Colorado Department of Transportation
606 South 9th Street
Grand Junction, co 81501
Phone: 970-683-6351
Fax: 970-683-6369
Region 3 KC

As Constructed
No Revisions:
Revised:
Void:

H-02-EV
GENERAL LAYOUT

Designer: C. Ferrari
Detailer: C. Ferrari
Structure Numbers: H-02-EV
Sheet Subset: Bridge
Subset Sheets: B02 of 5

Project No./Code
NHPP 0701-263
27298
Sheet Number 18

ferraricj 3:12:16 PM pw:\\cdot-pw.bentley.com:cdot-pw-01p\Documents\02 Minor Projects\CDOT Collaboration Projects\27298 - 070a resurfacing mp 31.0-37.0\01 Pre-Construction\Drawings\Structures\27298_B02_Gereral Layout H-02-EV.dgn

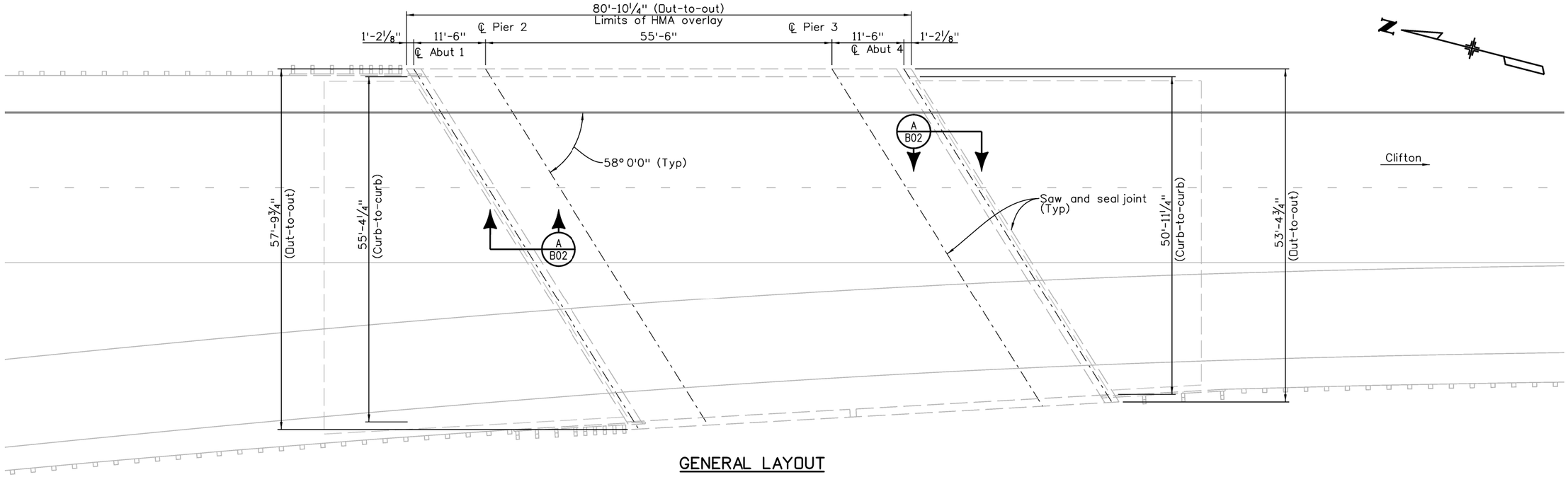

GENERAL LAYOUT

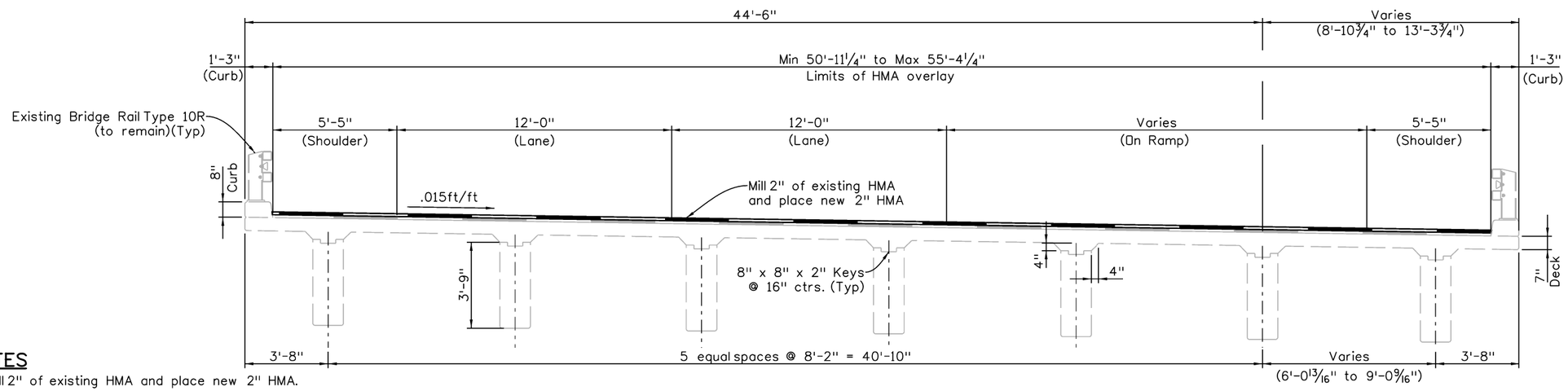

TYPICAL SECTION

NOTES

1. Mill 2" of existing HMA and place new 2" HMA.
2. Per the latest bridge inspection report, existing bridge has about 4" of HMA overlay over waterproofing membrane. Contractor shall determine the existing conditions to prevent any damage to the existing membrane during asphalt removal operations. Any damages made to existing membrane shall be repaired at no additional cost to the project.

INITIALS	DESIGN	DATE	DETAIL	DATE	QUANTITY	DATE
By	CF	01/26	CF	01/26	CF	01/26
Checked By	AA	02/26	AA	02/26	AA	02/26

All seals for this set of drawings are applied to the cover page(s)

Print Date: 3/12/2026
File Name: 27298_B03_General Layout H-02-EW.dgn
Horiz. Scale: Varies Vert. Scale: As Noted
Unit Information MSC

Sheet Revisions		
Date:	Comments	Init.

Colorado Department of Transportation
606 South 9th Street
Grand Junction, co 81501
Phone: 970-683-6351
Fax: 970-683-6369
Region 3 KC

As Constructed
No Revisions:
Revised:
Void:

H-02-EW
GENERAL LAYOUT

Designer: C. Ferrari
Detailer: C. Ferrari
Structure Numbers: H-02-EW
Sheet Subset: Bridge
Subset Sheets: B03 of 5

Project No./Code
NHPP 0701-263
27298
Sheet Number 19

ferraricj 8:54:44 AM pw:\\cdot-pw.bentley.com:cdot-pw-01p\Documents\02 Minor Projects\CDOT Collaboration Projects\27298 - 070a resurfacing mp 31.0-37.0\01 Pre-Construction\Drawings\Structures\27298_B03_General Layout H-02-EW.dgn

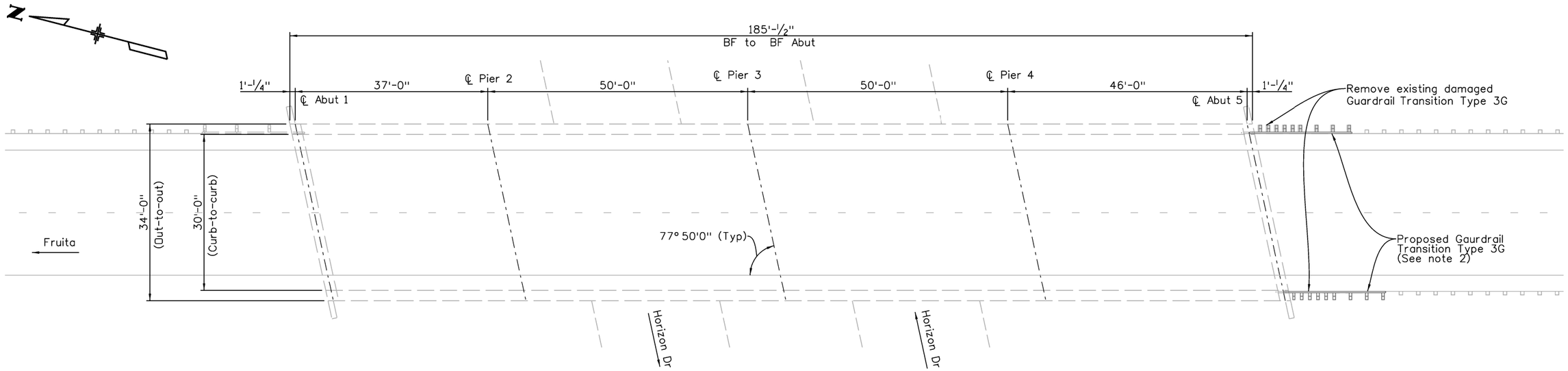

GENERAL LAYOUT

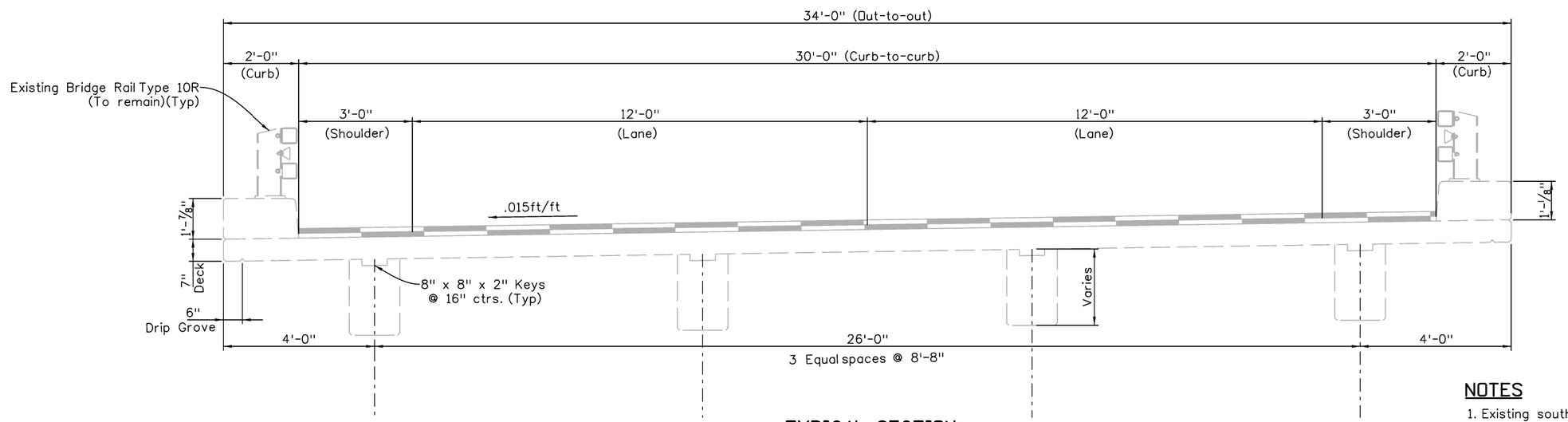

TYPICAL SECTION

NOTES

1. Existing southside bridge rail transitions shall be removed and replaced with Type 3G Transitions.
2. See sheet B05 for Transition Details.

INITIALS	DESIGN	DATE	DETAIL	DATE	QUANTITY	DATE
By	CF	01/26	CF	01/26	CF	01/26
Checked By	AA	02/26	AA	02/26	AA	02/26

All seals for this set of drawings are applied to the cover page(s)

Print Date: 3/11/2026
File Name: 27298_B04_General Layout H-02-EX.dgn
Horiz. Scale: Varies Vert. Scale: As Noted
Unit Information MSC

Sheet Revisions		
Date:	Comments	Init.

Colorado Department of Transportation
606 South 9th Street
Grand Junction, co 81501
Phone: 970-683-6351
Fax: 970-683-6369
Region 3 KC

As Constructed
No Revisions:
Revised:
Void:

H-02-EX
GENERAL LAYOUT

Designer: C. Ferrari
Detailer: C. Ferrari
Sheet Subset: Bridge
Structure Numbers: H-02-EX
Subset Sheets: B04 of 5

Project No./Code
NHPP 0701-263
27298
Sheet Number 20

ferraric| 2:40:58 PM pw:\\cdot-pw.bentley.com:cdot-pw-01p\Documents\02 Minor Projects\CDOT Collaboration Projects\27298 - 070a resurfacing mp 31.0-37.0\01 Pre-Construction\Drawings\Structures\27298_B04_General Layout H-02-EX.dgn

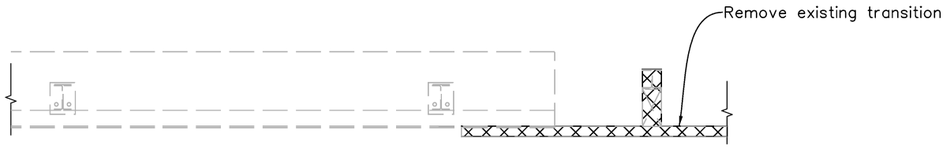

EXISTING PLAN

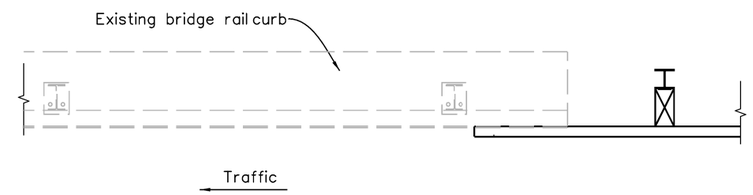

PROPOSED PLAN

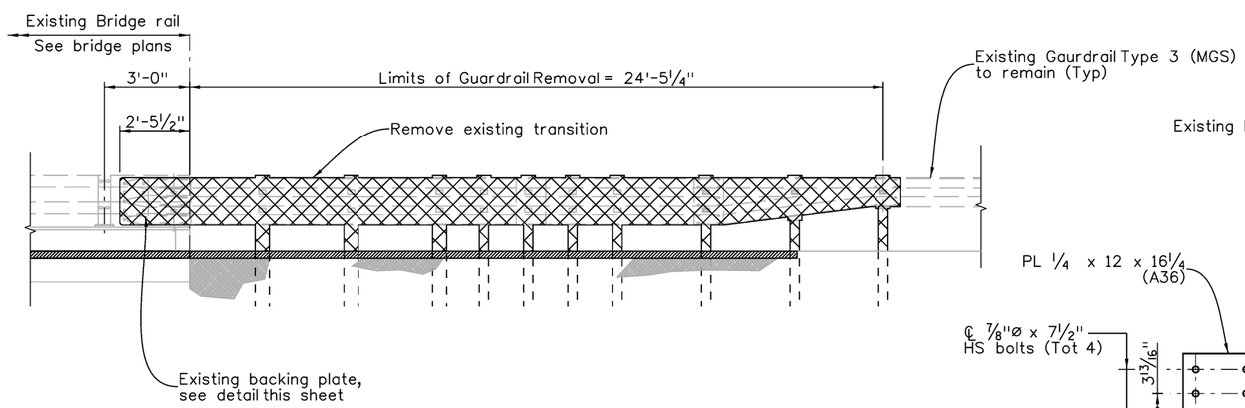

EXISTING ELEVATION

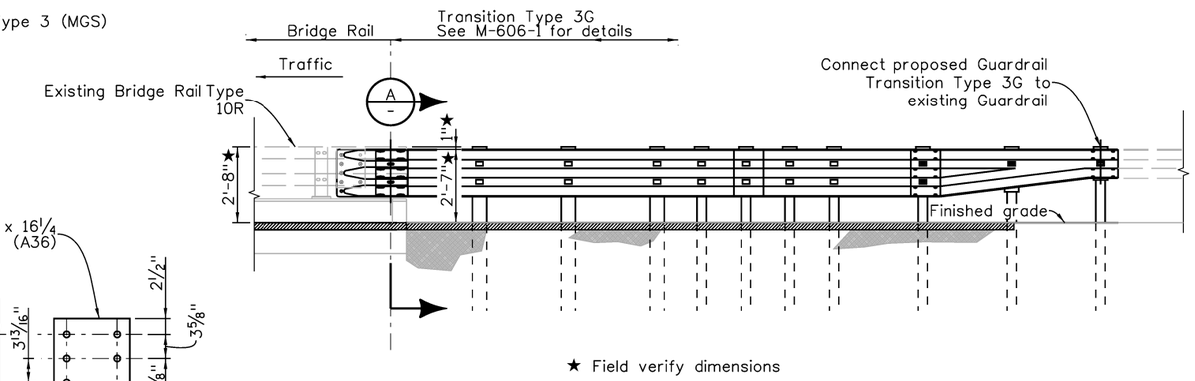

PROPOSED ELEVATION

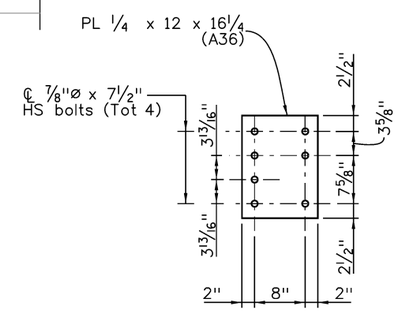

EXISTING BACKING PLATE

Note: Use existing Base plate or verify existing drill hole locations and adjust to match

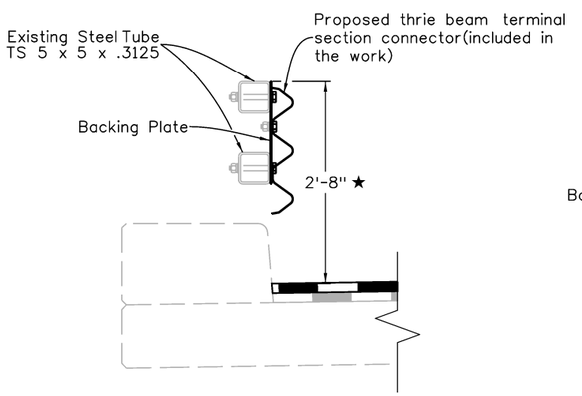

SECTION A-A

★ Field verify dimensions

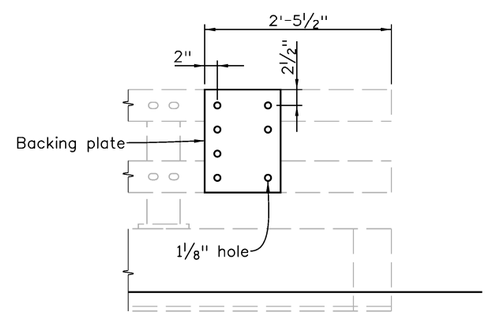

EXISTING RAIL TUBE DETAILS

Note: Use existing Base plate or verify existing drill hole locations and adjust to match

LEGEND

Removal limits

NOTES:

1. All tubes shall be ASTM A1085. All posts, base plates, and splice tubes fabricated by welding shall be ASTM A572 Grade 50. All other steel shall be Grade 36 unless otherwise noted.
2. The above material and all anchor bolts and miscellaneous bolts, nuts, and washers shall be galvanized after fabrication in accordance with section 509. Concrete, reinforcing steel, and structural steel elements shall conform to the requirements of Sections 601, 602, and 509, respectively unless otherwise noted.
3. All bolts that have lock washers shall be tightened to snug only.
4. The thrie beam section connector shall be included in the guardrail work.
5. If undamaged, the existing Backing Plate and bolts can be re-used to connect the Bridge Rail and Guardrail Transition, if a new Backing Plate is required it shall be included in the cost of guardrail work.
6. If undamaged, the existing bolts and posts connected to the Guardrail Transition can be re-used, if the bolts and posts are to be replaced, it will be included in the cost of guardrail work.
7. Re-use existing bolt holes in the Steel Tubes. If existing holes are unusable, field drill existing tubes for new holes as required and coat bare metal with zinc rich paint.
8. See roadway plans for details and quantities of the placement/removal of Guardrail Transitions.

INITIALS	DESIGN	DATE	DETAIL	DATE	QUANTITY	DATE
By	CF	01/26	CF	01/26	CF	01/26
Checked By	AA	02/26	AA	02/26	AA	02/26

All seals for this set of drawings are applied to the cover page(s)

Print Date: 3/11/2026
File Name: 27298_B05_Transition Details.dgn
Horiz. Scale: Varies Vert. Scale: As Noted
Unit Information MSC

Sheet Revisions

Date:	Comments	Init.

Colorado Department of Transportation
606 South 9th Street
Grand Junction, co 81501
Phone: 970-683-6351
Fax: 970-683-6369
Region 3 KC

As Constructed
No Revisions:
Revised:
Void:

TRANSITION DETAILS

Designer: C. Ferrari
Detailer: C. Ferrari
Structure Numbers H-02-EX
Sheet Subset: Bridge
Subset Sheets: B05 of 5

Project No./Code
NHPP 0701-263
27298
Sheet Number 21

ferraric j 12:55:39 PM pw:\\cdot-pw.bentley.com:cdot-pw-01p\Documents\02 Minor Projects\CDOT Collaboration Projects\27298 - 070a resurfacing mp 31.0-37.0\01 Pre-Construction\Drawings\Structures\27298_B05_Transition Details.dgn

1. Site Description

The Contractor shall comply with all CDOT contractual requirements, and all requirements associated with the CDPS-SCP on this project. The SWMP Administrator for Construction shall update the SWMP to reflect current project site conditions.

A. Project Site Location:
The project is located in Mesa County on I-70 near Grand Junction from MP 31.39 to MP 37.

Location or address of construction office:

B. Project Site Description:
The project includes HMA mill and overlay, guardrail replacement, delineation, and striping.

C. Proposed Schedule for Sequence for Major Construction Activities:
Stabilize all areas that are not paved or landscaped through establishment of vegetation cover.

1. Paving – resurfacing
2. Guardrail replacement
3. Delineation/Final Pavement Marking
4. Permanent Stabilization

D. Acres of Disturbance:
1. Total area of construction site (LOC (PERMITTED AREA)): 53.88 acres
2. Total area of proposed disturbance (LDA): 0.25 acres
3. Total area of seeding: 0.25 acres

E. Existing Soil Data:
Existing soils within the project area consist mainly of sandy loam. The soils have moderate susceptibility to erosion except for the stony complexes, which have low susceptibility.

Data Source(s): NCRS Web Soil Survey

F. Existing Vegetation, Including Percent of Vegetative Cover:
Vegetative transects are not required, by permit, on projects with under and acre of disturbance. Existing vegetation in this project area consists of native and introduced grasses including various common weeds.

2. Stormwater Management Controls for First Construction Activities

The Contractor shall perform the following

A. Potential Pollutants Sources:
Refer to Potential Pollutant Sources in SWMP Section 4A. The SWMP Administrator for Construction shall prepare a list of all potential pollutants and their locations in accordance with subsection 107.25.

B. Offsite Drainage (Run on Water):
Place Control Measures to address run-on water in accordance with subsection 208.03.

C. Construction Dewatering:
Obtain a CDPS Dewatering Permit from CDPHE if conditions of their Low Risk Guidance for Discharges of Uncontaminated Groundwater to Land are not met; see subsections 107.02 and 107.25.

Refer to CDPHE Low Risk Discharge Guidance Document of Uncontaminated Groundwater to Land.
https://www.colorado.gov/pacific/sites/default/files/WQ%20LOW%20RISK%20GW.pdf

D. Vehicle Tracking Control:
Control Measures shall be implemented in accordance with subsection 208.04.

E. Perimeter Control:
Perimeter control shall be established as the first item on the SWMP to prevent the potential for pollutants leaving the construction site boundaries, entering the stormwater drainage system, or discharging to state waters. With subsection Perimeter control may consist of berms, silt fence, erosion logs, existing landforms, or other Control Measures as approved.

3. Qualified Stormwater Managers:

A. SWMP Administrator for Design:
CDOT Certified Individual responsible for developing SWMP Plan Sheets and SWMP Site Maps during the design phase.

Name/Title	Contact Information [phone & email]	Certification #
Trey Scism, PE I	Trey.scism@state.co.us	80D719CD

B. SWMP Administrator for Construction: (As defined in Section 208) The Contractor shall designate a SWMP Administrator for Construction upon accepting co-permittee of the permit. The SWMP Administrator for Construction shall become the operator for the SWMP and assume responsibility for all design changes to the SWMP implementation and maintenance in accordance with subsection 208.03, the SWMP shall remain the property of CDOT. The SWMP Administrator for Construction shall be responsible for implementing, maintaining, and revising SWMP, including the title and contact information. The activities and responsibilities of the SWMP Administrator for Construction shall address all aspects of the project's SWMP. (Update the information below for each new SWMP Administrator for Construction) (A copy of current TECS Certification must be included in the SWMP).

Name/Title	Contact Information (phone & email)	Certification #	Certification Expiration Date	Start Date

4. During Construction

Responsibilities of the SWMP Administrator for Construction: Considered a "living document", the SWMP is continuously reviewed and modified throughout the construction phases. During construction, the SWMP Administrator for Construction shall have full responsibility to maintain and update the SWMP in accordance with subsection 208.03(c).

During construction, indicate how items that were not addressed during design are being handled in construction. If items are covered in other sections of the SWMP, indicate below what section the discussion takes place.

A. Materials Handling and Spill Prevention and Response Plan: Prior to commencing Construction Activities Associated with Water Quality, the Contractor shall submit a Spill Response Plan. Materials handling and Spill Response Plan shall be in accordance with subsection 208.06.

B. Other CDPS Permits or Guidance Documents: List applicable CDPS permits or guidance documents associated with the permitted site and activities.

C. Stockpile Management: Shall be done in accordance with subsections 107.25 and 208.07.

D. Concrete Washout: Concrete and masonry washout water or waste from field laboratories and paving equipment shall be contained in accordance with subsection 208.05.

E. Saw Cutting: Shall be done in accordance with subsections 107.25, 208.02, 208.04, 208.05.

5. Control Measure Maintenance

Maintenance shall be in accordance with subsection 208.04(f).

6. Temporary, Permanent Stabilization and Long-Term Stormwater Management

The Contractor shall comply with all temporary stabilization and permanent stabilization requirements in accordance with subsection 208.04(e).

A. Seeding Plan:

The following seed mix(es) and rates are for drill seeding method as shown on the Permanent Stabilization Site Maps shall be used:

Common Name	Botanical Name	Lb. PLS per acre
Sideoats grama	Bouteloua curtipendula 'Vaughn'	3.0
Western wheatgrass	Pascopyrum smithii 'Arriba'	3.0
Galleta grass	Pleuraphis jamesii 'Viva'	2.5
Indian ricegrass	Achnatherum hymenoides "Rimrock" or "Paloma"	4.0
Alkali sacaton	Sporobolus airoides 'Salado'	0.5
Sand dropseed	Sporobolus cryptandrus	0.2
Little bluestem	Schizachyrium scoparium "Cimarron"	2.0
	Total	15.2

B. Seeding Application Method:

The following seeding methods shall be used for all areas shown on the Permanent Stabilization Site Maps. Soil compaction shall be minimized for areas where permanent/landscape stabilization will be achieved through vegetative cover.

SEEDING METHOD (subsection 212.05) – Seeding (Native) Hydraulic, CDOT Pay Item 212-00707 – 0.25 ACRE

C. Mulching Application:

Apply a minimum of 2 tons/ac of certified weed free hay or 2 1/2 tons/ac of certified weed free straw per acre and in accordance with Section 213, and mechanically crimp it into the soil in combination with an organic mulch tackifier.

Prior to winter shutdown or the summer seeding window closure: Uncompleted slopes shall be mulched with 2 tons of mulching (weed free) per acre, mechanically crimped into the topsoil in combination with an organic mulch tackifier in accordance with Sections 208 and 213.

D. Special Requirements:

1. Soil amendments, seedbed preparation, and permanent stabilization mulching shall be accomplished within four working days of placing the topsoil on the de-compacted civil subgrades. If placed topsoil is not mulched with permanent stabilization mulch within four working days, the Contractor shall complete temporary stabilization methods in accordance with subsection 208.04(e) at no additional cost to the Department.
2. Complete permanent stabilization mulching within 24 hours of hydraulic application of native seed.
3. The Contractor shall submit a proposed Permanent Stabilization Phasing Plan to the Engineer for approval showing how implementation of SWMP Permanent Stabilization Plans will minimize damage to seeded areas.

E. Soil Amendment Requirements: Minimum amendment material requirements for all disturbances to receive seeding.

0.25 Total Acres of Seeding (Native) Hydraulic (Pay Item 212-00707)

Pay Item	Description	Amount/ Acre	Units	Total For This Method
212-00702	Biotic Soil Amendments (Hydraulically Applied)	3500	Pounds	875

F. Soil Retention Covering:

On slopes and ditches requiring a blanket or turf reinforcement mat (TRM), the blanket/TRM shall be placed in lieu of mulch and mulch tackifier and placed after seeding. See SWMP Site Map for blanket/TRM locations.

G. Permanent Stabilization Application Under Structures:

Under structures, shade patterns should be considered and the use of Median Cover Material (Stone) or other stabilized options with an approved Project Special Provision should be used. See SWMP Site Map for locations.

H. Reseeding Operations/Corrective Stabilization:

Prior to stormwater construction work partial acceptance.

1. All seeded areas shall be reviewed by the SWMP Administrator for Construction and or Erosion Control Inspector for bare soils caused by surface or wind erosion. Bare areas caused by surface or gully erosion, blown away mulch, etc. shall be re-graded, seeded, and have the designated mulching applied as necessary, at no additional cost to the project.
2. The Contractor shall maintain seeding/mulch/tackifier/blanket/TRM, mow to control weeds or apply herbicide to control weeds in the seeded areas, at no additional cost to the project.

7. Prior to Project Final Acceptance

A. When directed by the Engineer, removal and disposal of temporary control measures shall be included in the cost of work.

B. At the end of the project, all ditch checks shall consist of either temporary erosion logs (sediment control logs) (or equivalent) or permanent riprap.

C. Refer to subsection 208.10 for Items to be completed prior to requesting partial acceptance of water quality work.

8. Narratives

Control Measure Matrixes During Construction:

1. Control measure narratives have been included for the CDOT Standard Specifications and Standard Plan M-208 and M-216 along with any non-standard control measures approved during the design process. If a Non-Standard Control Measure not included in the SWMP is proposed and approved by the Engineer, the SWMP Administrator for Construction shall: Place an "X" in the column "M-208 Standard or 'X' for Non-Standard" and complete a Non-Standard Control Measure Specification and Narrative. The Narrative shall include drawings, dimensions, installation information, materials, implementation processes, control measure-specific inspection expectations, and maintenance requirements of the control measure. The appropriate "X" shall also be added to the implementation phase(s).
2. The SWMP Administrator for Construction shall place an "X" in the column "In Use On Site" when the control measure has been installed.
3. A "B" in the "Initial Activities" column indicates that the control measure shall be installed **before** construction activities associated with water quality commence. Locations and quantities will be discussed during the Environmental Pre-Construction Conference with the Regional Water Pollution Control Manager.

Structural Control Measures that may be potentially used on the project for erosion and sediment control; practices may include, but are not limited to the following:

Application, Control measure	Narrative	M- 208 Standard or "X" For Non-Standard	In Use on Site	Initial Activities	Interim Activities	Permanent Stabilization
Culvert Inlet/Outlet Protection *Erosion logs (sediment control logs), aggregate bags*	Placed at mouth of culvert inlets and over top of culvert at inlet and outlet where disturbance may be occurring adjacent to pipe to prevent sediment laden water from entering pipe or drainage. Place prior to the start of construction activities associated with water quality.	M-208		X	X	
Stockpile Protection *Temporary berm, erosion logs (sediment control logs), aggregate bags**	Placed within specified distance, in accordance with subsection 208.06, from toe to contain sediment around stockpile. *Aggregate bags are easily moved and replaced for access during the workday. Place prior to start of stockpiling, increase control as the stockpile increases size.	M-208		X	X	
Toe of Fill Protection *Erosion logs (sediment control logs), temporary berm, silt fence, topsoil windrow**	Place prior to slope/embankment work to capture sediment and protect and delineate undisturbed areas. *Can be used to stockpile topsoil for salvage.	M-208			X	
Slope Control *Silt fence, erosion logs (sediment control logs)*	Placed on the contour of a slope to contain and slow down construction runoff. Place prior to the start of construction activities associated with water quality.	M-208			X	

Non-Structural Control Measures that may be potentially used on the project for erosion and sediment control; practices may include, but are not limited to:
Erosion control devices are used to limit the amount of soil loss on site. Sediment control devices are designed to capture sediment on the project site. Construction controls are control measures related to construction access and staging. Control Measure locations are indicated on the SWMP Site Map.

Application, Control measure	Narrative	M- 208 Standard Or "X" for Non-Standard	In Use on Site	Initial Activities	Interim Activities	Permanent Stabilization
Spray-On Mulch Blanket (Not to be used in areas of concentrated flows, i.e. ditch lines.)	Temporary or Permanent Stabilization placed as a surface cover for erosion control and or seeding establishment. To be installed as temporary surface cover when work is temporarily halted and as approved by the Engineer					X
Seeding Permanent (Native Perennial)	Permanent Stabilization of disturbance and to reduce runoff and control erosion on disturbed areas.					X
Sweeping	Source control, used to remove sediment tracked onto paved surfaces and to prevent sediment from leaving the LOC. Sweep daily and at the end of the construction shift as needed. Kick brooms shall not be permitted.				X	

9. Tabulation of Stormwater Quantities

A. Control Measure sediment removal and disposal shall be paid for as: 208 Removal and Disposal of Sediment (Equipment) and 208 Removal and Disposal of Sediment (Labor). All other control measure maintenance shall be included in the cost of the control measure.

B. It is estimated that blading (140-250 horsepower), dozing (130-250 horsepower) and backhoe (minimum 50 horsepower) may be required for miscellaneous erosion control work as directed by the Engineer. See general notes for payment information.

PSP Spec.	Pay Item	Description	Pay Unit	Initial Const.	Interim Const.	Permanent Stabilization	*Total Quantity
	208-00002	Erosion Log Type 1 (12 inch)	LF		200		200
	208-00035	Aggregate Bag	LF		200		200
	208-00103	Removal and Disposal of Sediment (Labor)	Hour		20		20
	208-00105	Removal and Disposal of Sediment (Equipment)	Hour		20		20
	208-00106	Sweeping (Sediment Removal)	Hour		20		20
	208-00107	Removal of Trash	Hour		20		20
	212-00702	Biotic Soil Amendments (Hydraulic Applied)	Pounds			875	
	212-00707	Seeding (Native) Hydraulic	Acre			0.25	
	213-00012	Spray-on Mulch Blanket	Acre			0.25	
X	700-70380	Force Account Erosion Control	FA		1		1

*It is anticipated that additional control measures and control measure quantities not shown on the SWMP Site Maps shall be required on the project for unforeseen conditions and replacement of items that are beyond their useful service life, see subsections 208.03 and 208.04. **Quantities for all control measures shown above are estimated and have been increased for unforeseen conditions and normal control measure life expectancy.** Quantities shall be adjusted according to the conditions encountered in the field as directed and approved by the Engineer. Payment shall be for the actual work completed and material used.
**Pay Item 208-00071 is included for anticipated maintenance of vehicle tracking pads based on the service life of the control measure in the field. The use of the material shall be directed and approved by the Engineer.

10. Biological Impacts and Dewatering

A. Environmental Impacts:
1. Wetland Impacts: NO
2. Stream Impacts: NO
3. Threatened and Endangered Species: NO

B. Dewatering:
(Not covered under the CDPHE guidance document Low Risk Discharge Guidance Discharges of Uncontaminated Groundwater to Land): https://drive.google.com/open?id=17ck1ZJojHSacJ_wxp2FfUr4rAxNgVWZv
1. Dewatering: Refer to other environmental permits in accordance with subsection 107.02 and the permits contained in Tab 16 of the SWMP.
2. If groundwater does not meet water quality standards for receiving water a separate CDPS Dewatering Permit shall be obtained by the Contractor from CDPHE in accordance with subsections 107.02 and 107.25.

LEGEND

- TOPSOIL
- OVERBURDEN
- CLAY
- SILT
- SAND
- GRAVEL
- SHALE
- LIMESTONE
- SANDSTONE
- SOLID ROCK (IGNEOUS)
- SOLID ROCK (METAMORPHIC)
- COAL

COMPOSITE MATERIALS ARE REPRESENTED BY COMBINATIONS OF THE ABOVE SYMBOLS, SUCH AS:

- SANDY CLAY

TEST HOLES

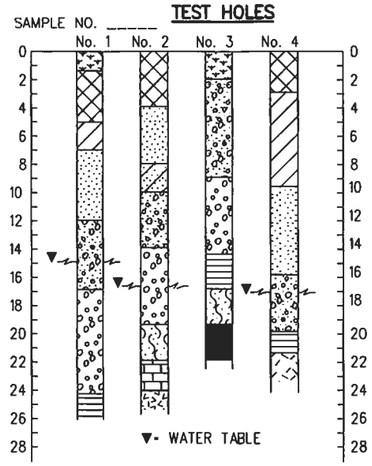

TYPICAL BORING LOG

- TERRAIN SINGLE SHOTS
- TOP OF CUT
- TOE OF FILL

TERRAIN

- GRAVEL ROAD OR DRIVEWAY
- INTERNATIONAL SYMBOL OF ACCESS
- SIDEWALK WITH RAMP
- EDGE OF PAVEMENT
- CENTERLINE OF DIRT ROAD

ROADWAY

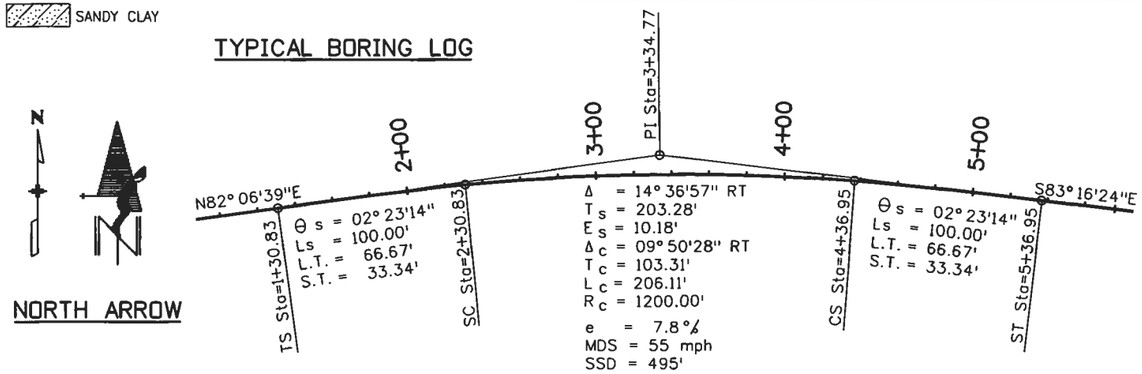

TYPICAL HORIZONTAL CURVE

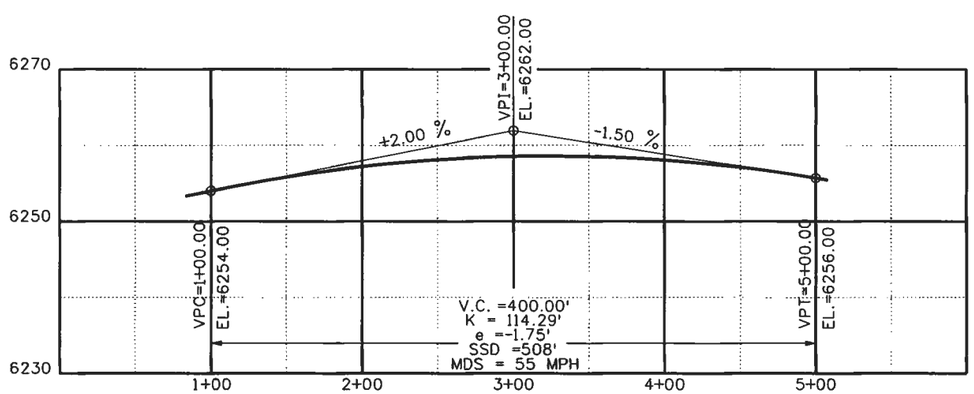

TYPICAL VERTICAL CURVE

- SECTION CORNER
- QUARTER, SIXTEENTH, AND SECTION CORNERS
- PROTECT EXISTING MARKER — PROTECT EXISTING MARKER
- SET EASEMENT MONUMENT
- TEMPORARY EASEMENT POINT
- RIGHT OF WAY MARKER
- BLM — BLM MARKER
- PP — PROPERTY PIN
- NOAA — NOAA MARKER
- QUARTER, SIXTEENTH, AND SECTION CORNERS
- FED — FEDERAL MONUMENT
- WC — WITNESS CORNER
- WC — BENCH MARK
- USGS — USGS MARKER
- LOCAL OR PLSS MONUMENT
- SECONDARY CONTROL MONUMENT
- ROW — RIGHT OF WAY MARKER
- N 9.88 E 3.81 EL 0.00 — PROJECT CONTROL MONUMENT
- N 10.13 E 3.81 EL 0.00 — DENSIFICATION CONTROL MONUMENT
- N 10.38 E 3.81 EL 0.00 — HIGH ACCURACY REFERENCE NETWORK CONTROL MONUMENT
- PERMANENT, PROPERTY, SLOPE, & UTILITY EASEMENT LINE
- TEMPORARY EASEMENT LINE (EXISTING)
- PROPERTY BOUNDARY LINE (EXISTING AND PROPOSED)
- ACCESS CONTROL LINE
- BARRIER ACCESS CONTROL LINE
- RIGHT OF WAY LINE
- VIRGIN RIGHT OF WAY LINE (PROPOSED)
- CITY LIMIT LINE (EXISTING)
- COUNTY LINE (EXISTING)
- QUARTER SECTION LINE
- SECTION LINE
- SIXTEENTH SECTION LINE
- STATE LINE (EXISTING)
- TOWNSHIP LINE (EXISTING)

SURVEY/ROW

GENERAL NOTES

1. EXISTING FEATURES SHOWN AS SCREENED WEIGHT (LIGHT GRAY SCALE), EXCEPT AS NOTED WITH THE WORD (EXISTING). PROPOSED OR NEW FEATURES SHOWN AS FULL WEIGHT WITHOUT SCREENING, EXCEPT AS NOTED WITH THE WORD (PROPOSED).
2. THESE SYMBOLS ARE INTENDED TO EXPLAIN THE VARIOUS TOPOGRAPHIC FEATURES INVOLVED ON THE DESIGN PLAN SHEETS WHICH ARE PREPARED AT VARIOUS SCALES. NOTES ARE ADDED WHERE NECESSARY TO CLARIFY THE SYMBOL. A LEGEND IS PROVIDED IN THE PLANS FOR SYMBOLS NOT SHOWN ON THE STANDARD SYMBOLS SHEETS.
3. GUARDRAIL, CURB AND GUTTER, ETC., ARE REPRESENTED BY A SYMBOL WITH TYPE GIVEN BY NOTE.

- BACK OF CURB
- TOP OF CURB
- FLOW LINE (℄)
- EDGE OF PAVEMENT
- CURB AND GUTTER
- CURB AND GUTTER-TYPE 2, 4 OR 6
- GUTTER
- CURB CUT
- CURB, GUTTER OR OTHER

CURB AND GUTTER

- GUARDRAIL END ANCHOR
- GUARD POST
- GUARDRAIL-TYPE 3 OR 6
- GUARDRAIL-TYPE 4 OR 7
- GUARDRAIL-TYPE 5 OR HANDRAIL
- GUARDRAIL-TYPE 3A DOUBLE OR TYPE 6 DOUBLE
- CABLE BARRIER

GUARDRAIL

Computer File Information		Sheet Revisions	
Creation Date: 07/31/19		Date:	Comments
Designer Initials: JBK	R-X		
Last Modification Date: 07/31/19	R-X		
Detailer Initials: LTA	R-X		
CAD Ver.: MicroStation V8 Scale: Not to Scale Units: English	R-X		

Colorado Department of Transportation
2829 West Howard Place
CDOT HQ, 3rd Floor
Denver, CO 80204
Phone: 303-757-9021 FAX: 303-757-9868
Engineering and Standards Services JBK

STANDARD SYMBOLS

Issued by Engineering and Standards Services: July 31, 2019

STANDARD PLAN NO.
M-100-1
Standard Sheet No. 1 of 3
Project Sheet Number:

ROCK, MASONRY OR MECHANICALLY STABILIZED WALL (FACE)

BRIDGE CURB

BRIDGE RAIL

BRIDGE RAIL-TYPE 3A

FLOW LINE CBC

STRUCTURES MISCELLANEOUS

STRUCTURE

MISCELLANEOUS BUILDING STRUCTURE (PRIMARY)

MISCELLANEOUS STRUCTURE (SECONDARY)

FOUNDATION OR PAD (CONCRETE OR BLOCK)

BUILDING STRUCTURES

RR TELEGRAPH POLE

RR SWITCH

RR GUY POLE

RR SIGNALS WITH OR WITHOUT GATE

RR CROSS BUCK SIGN

RR SIGNAL CONTROLLER CABINET

RR MISCELLANEOUS SYMBOL

RR TRACK CENTERLINE

RAILROAD

BOULDER UNDER 6FT

GEOLOGY MISC SYMBOL

MINESHAFT SYMBOL

ROCK OUTCROP

BOULDER FIELD OR ROCK OVERHANG

GEOLOGY

COMBINATION WIRE FENCE WITH GATE

CHAIN LINK FENCE WITH GATE

BARBED WIRE FENCE WITH GATE

SOUND OR BARRIER FENCE WITH GATE

DEER FENCE WITH GATE

WOOD FENCE WITH GATE

SNOW FENCE WITH GATE

PF PF PF PF PF PF PF

PLASTIC FENCE

SF SF SF SF SF SF SF

SF SF SF SF SF SF SF

SILT FENCE

DEBRIS FENCE

FENCE

MISCELLANEOUS TREES

DECIDUOUS TREE

DECIDUOUS SHRUB

TEETER TOTTER SYMBOL

SWING SET SYMBOL

CONIFEROUS TREE

CONIFEROUS SHRUB

BENCH

SPRINKLER HEAD

TREES GROVE

HEDGE OR SHRUB GROVE

EDGE OF WETLANDS

LANDSCAPING

HAZARD WASTE MONITORING WELL

ENVIRONMENTAL CONCERN SITE

EROSION LOG

ROCK CHECK DAM

CONCRETE WASHOUT STRUCTURE

DROP INLET EROSION PROTECTION

TEMPORARY BERM

SOIL RETENTION BLANKET

PIPE INLET EROSION PROTECTION

RIGID INLET PROTECTION

STORM DRAIN INLET PROTECTION

EROSION CHECK

EROSION LOG DITCH CHECK

SILT DIKE

SEDIMENT TRAP/ DEWATERING STRUCTURE

EXISTING WETLAND PATTERN

TEMPORARY SLOPE DRAIN

STABILIZED CONSTRUCTION ENTRANCE

LDA LDA LDA LDA LDA LDA

LIMITS OF DISTRUBED AREA

ENVIRONMENTAL CONCERN

HAZARDOUS WASTE SITE

NW NW NW NW

NOXIOUS WEED

FLOW ARROW

ENVIRONMENTAL

SA SA

SANITARY SEWER MANHOLE

SA

SANITARY SEWER MISCELLANEOUS SYMBOL

SIZE, MATERIAL, OWNER

SANITARY SEWER PIPE

SANITARY SEWER PIPE MISCELLANEOUS

SANITARY SEWER

METAL

CONCRETE

PIPE WITH END SECTION

HEADWALL

PIPE MISCELLANEOUS

PIPES

CHECK DAM UNDER 4 FT

HEADGATE 1

DIVERSION BOX SYMBOL

SPRING SYMBOL

FLOW GAUGE

MISCELLANEOUS WATERWAYS

DITCH WITH FLOW

EDGE OF WATER, CANALS, PONDS, STREAM OR RIVER

DITCHES AND WATERWAY

INLET TYPE 13

INLET TYPE C

INLET TYPE D

INLET VANE GRATE

INLET TYPE R XX FT LENGTH

ST ST

STORM SEWER MANHOLE

G

MANHOLE EXISTING

ST

STORM SEWER MISCELLANEOUS

STORM SEWER PIPE

STORM SEWER PIPE MISCELLANEOUS

STORM SEWER

W

WATER SPIGOT

WATER VALVE

W W

WATER MANHOLE

FIRE HYDRANT

WATER METER

W

WATER WELL SYMBOL

SIZE, MATERIAL, OWNER

W W W W W W W

W W W W W W W

WATER LINE

W W W W W W W

WATER MISCELLANEOUS LINE

WATER

Computer File Information	
Creation Date: 07/31/19	
Designer Initials: JBK	(R-X)
Last Modification Date: 07/31/19	(R-X)
Detailer Initials: LTA	(R-X)
CAD Ver.: MicroStation V8 Scale: Not to Scale Units: English	(R-X)

Sheet Revisions	
Date:	Comments

Colorado Department of Transportation
2829 West Howard Place
CDOT HQ, 3rd Floor
Denver, CO 80204
Phone: 303-757-9021 FAX: 303-757-9868
Engineering and Standards Services JBK

STANDARD SYMBOLS

Issued by Engineering and Standards Services: July 31, 2019

STANDARD PLAN NO.

M-100-1

Standard Sheet No. 2 of 3

Project Sheet Number:

PROPANE TANK
GAS JUNCTION BOX
GAS VAULT
GAS LINE MARKER OR AIR VENT
GAS METER LOW PRESSURE
GAS METER HIGH PRESSURE
GAS MISCELLANEOUS
GAS LIGHT
GAS VALVE HIGH OR LOW PRESSURE

— G — G — G — SIZE — G — G — G — G —
— — G — — — G — — — G — — — G — — — G — — — G — — — G —
GAS LINE LOW PRESSURE

— G — HP — G — SIZE — HP — G — HP — G
— — G — — — HP — — G — — — HP — — G — — — HP — — G — — -
GAS LINE HIGH PRESSURE

— PG — PG — PG — PG — PG — PG — PG —
— — PG — — — PG — — — PG — — — PG — — — PG — — — PG — — — PG —
PROPANE GAS LINE

— — G? — — — G? — — — G? — — — G? — — — G? — — — G? — — — G? — —
GAS LINES MISCELLANEOUS

GAS

OIL METER HIGH AND LOW PRESSURE
OIL VALVE HIGH AND LOW PRESSURE
OIL MISCELLANEOUS

— O — O — O — O — O — O — O —
— — O — — — O — — — O — — — O — — — O — — — O — — — O —
OIL LINE LOW OR HIGH PRESSURE

— — O? — — — O? — — — O? — — — O? — — — O? — — — O? — — — O? — —
OIL MISCELLANEOUS LINE

OIL

GRAVE HEADSTONE SYMBOL
MAIL DROP BOX
FLAG POLE
TRASH BARREL POST
GRAVE SYMBOL
RADIO STATION ANTENNA

— — ?— — — ?— — — ?— — — ?— — — ?— — — ?— — — ?— — — ?— — — ?— — — ?— — — ?
MISCELLANEOUS TOPOGRAPHY

MISCELLANEOUS TOPOGRAPHY

CAMPSITE MARKER
TRAILER ELECTRIC HOOKUP
TRAILER DUMP STATION
CAMPFIRE RING
TRAILER SEWER INLET
TRAILER WATER HOOKUP
CAMPSITE GRILL
CAMPSITE TABLE

CAMPING

LIGHT STANDARD
HIGH MAST LIGHT STANDARD
SPOT OR FLOOD LIGHT

LIGHTING

ELECTRICAL PEDESTAL OR PULL BOX
TRANSMISSION TOWER
WIND POWERED GENERATOR
RELOCATED LIGHT STANDARD
DECORATIVE LIGHT STANDARD
CATENARY POLE FOUNDATION
ELECTRICAL MANHOLE
POWER POLE
TRANSFORMER ON POLE
ELECTRICAL OUTLET
ELECTRICAL MISCELLANEOUS
GUY WIRE
ELECTRICAL VAULT OR TRANSFORMER
GUY POST
FIRE ALARM BOX

— E — E — E — E — E — E — E —
— — E — — — E — — — E — — — E — — — E — — — E — — — E —
ELECTRICAL UNDERGROUND LINE

— E — OH — E — OH — E — OH — E
— — E — — — OH — — — E — — — OH — — — E — — — OH — — — E ·
ELECTRICAL OVERHEAD LINE

ELECTRICAL MISCELLANEOUS LINE

ELECTRICAL

CABLE TV POLE
CABLE TV RISER
COMBINATION POLE-POWER,TELEPHONE
TV ANTENNA
TV MISCELLANEOUS
TV MANHOLE

— TV — TV — TV — TV — TV — TV — TV —
— — TV — — — TV — — — TV — — — TV — — — TV — — — TV — — — TV —
TV UNDERGROUND CABLE

— TV — OH — TV — OH — TV — OH — TV ·
— — TV — — — OH — — — TV — — — OH — — — TV — — — OH — — — TV ·
TV OVERHEAD CABLE

— — TV? — — — TV? — — — TV? — — — TV? — — — TV? — — — TV? — — — TV? —
TV MISCELLANEOUS CABLE

TELEVISION

TELEPHONE GUY POLE
FIBER OPTIC CABLE MARKER
TELEPHONE MANHOLE
COMBINATION POLE-POWER
TELEPHONE MISCELLANEOUS
COMBINATION GUY POLE-POWER

— T — T — T — T — T — T — T —
— — T — — — T — — — T — — — T — — — T — — — T — — — T —
TELEPHONE UNDERGROUND CONDUIT OR CABLE

— FO — FO — FO — FO — FO — FO — FO —
— — FO — — — FO — — — FO — — — FO — — — FO — — — FO — — — FO —
FIBER OPTICS UNDERGROUND CABLE

— T — OH — T — OH — T — OH — T ·
— — T — — — OH — — — T — — — OH — — — T — — — OH — — — T ·
TELEPHONE OVERHEAD LINE

— — T? — — — T? — — — T? — — — T? — — — T? — — — T? — — — T? — —
TELEPHONE MISCELLANEOUS LINE

TELEPHONE

FIBER MARKER DOME
FIBER MARKER SLATE
RWIS - REMOTE WEATHER SENSOR
VMS-BUTTERFLY
VMS-GROUND
VMS-CANTILEVER
VMS-SIGN BRIDGE

- ITS — ITS — ITS — ITS — ITS — ITS — ITS —
ITS CONDUIT

INTELLIGENT TRANSPORTATION SYSTEM

CENTER YELLOW SOLID DOUBLE
CENTER YELLOW SOLID BROKEN (NO PASS)
4 INCH WIDE
8 INCH WIDE
LANE LINE BROKEN
LANE DROP
CHANNELIZING OR EDGE LINE
4 INCH WIDE
8 INCH WIDE
DOTTED BROKEN
STOP LINE
- INTERNATIONAL SYMBOL OF ACCESS
R R - RAILROAD CROSSING
- BICYCLE PED ACCESS

TRAFFIC STRIPING

TRAVEL DIRECTION
BARRIER LIGHT
FLAGGER
DELINEATOR-TYPE I
SEQUENCING ARROW PANEL
FLASHING BEACON
DELINEATOR-TYPE II
DELINEATOR-TYPE III
BUTTERFLY SIGN
HALF BUTTERFLY SIGN
IMPACT ATTENUATOR
SIGN ASSEMBLY
SINGLE POST SIGN
DOUBLE POST SIGN
SIGN-WITH FLASHING BEACON
ROAD CLOSURE GATE BEACON SYMBOL
ROAD CLOSURE GATE SYMBOL
DEER REFLECTORS

— — ?— — — ?— — — ?— — — ?— — — ?— — — ?— — — ?— — — ?
TRAFFIC CONTROL MISCELLANEOUS DEVICE

TRAFFIC CONTROL DEVICE

TRAFFIC CONTROL

SIGNAL SPAN WIRE POLE
DOUBLE MAST ARM POLE
LUMINAIRE
SIGNAL FACE
SIGNAL POLE WITH MAST ARM
SIGNAL FACE WITH BACKPLATE
SIGNAL CONTROLLER AND CABINET (4 FT)
TELEMETRY ANTENNA
PULL BOX
MICRODETECTOR
VIDEO DETECTION CAMERA
FIRE PREEMPTION UNIT AND TIMER
PEDESTRIAN SIGNAL FACE
PEDESTRIAN PUSH BUTTON
PEDESTAL POLE
PULL BOX SPECIAL

— TR — TR — TR — TR — TR — TR — TR —
TRAFFIC CONDUIT

TRAFFIC SIGNAL

Computer File Information		Sheet Revisions	
Creation Date: 07/31/19		Date:	Comments
Designer Initials: JBK	R-X		
Last Modification Date: 07/31/19	R-X		
Detailer Initials: LTA	R-X		
CAD Ver.: MicroStation V8 Scale: Not to Scale Units: English	R-X		

Colorado Department of Transportation
2829 West Howard Place
CDOT HQ, 3rd Floor
Denver, CO 80204
Phone: 303-757-9021 FAX: 303-757-9868
Engineering and Standards Services JBK

STANDARD SYMBOLS

Issued by Engineering and Standards Services: July 31, 2019

STANDARD PLAN NO.
M-100-1
Standard Sheet No. 3 of 3
Project Sheet Number:

A

AAC	Aluminum Arch Culvert
AADT	Annual Average Daily Traffic
ABC	Aggregate Base Course
Abut	Abutment
ACM	Abestos Containing Materials
ADA	Americans with Disabilities Act
ADT	Average Daily Traffic
AE	Architect-Engineer, Architecture, Engineering
AEC	Architecture, Engineering and Construction
AGA	American Gas Association
Alt	Alternate
API	American Petroleum Institute
APL	Approved Products List
Approx	Approximate
APWA	American Public Works Association
AQCC	Air Quality Control Commission
ARE	Additional Requested Element (Design/Build Terminology)
AREMA	American Railway Engineering & Maintenance-of-Way Association
AHSTA	Ahead Station
ARA	Asphalt Rejuvenating Agent
ASBI	American Segmental Bridge Institute
ASD	Allowable Stress Design
ASOP	American Society of Photogrammetry
ASR	Alkali Silica Reactivity
ASSE	American Society of Sanitary Engineering, American Society of Safety Engineers
Asst	Assistant
ATB	Asphalt Treated Base
ATM	Active Traffic Management
AUTS	Actual Ultimate Tensile Strength

B

Bk to Bk	Back to Back
BEI	By Equal Increments
BM	Bench mark
BPF	Blows Per Foot
BAFO	Best and Final Offer
Bbl	Barrels
BC	Bolt Circle
Beg	Begin
Bk	Back
Bldg	Building
BLM	Bureau of Land Management
Blvd	Boulevard
BMP	Best Management Practice
BNSF	Burlington Northern & Santa Fe Railroad
Bott	Bottom
BP	Bearing Pressure
Brg	Bearing
Bk Sta	Back Station
BT	Beginning of Transition
Btwn	Between

C

℄	Centerline
C&G	Curb and Gutter
CA	Concrete Arch
CAC	Concrete Arch Culvert
CAD	Computer Aided Design, Computer Aided Drafting
CADD	Computer Aided Design and Drafting
CBC	Concrete Box Culvert
CBG	Concrete Box Girder
CBGC	Concrete Box Girder Continuous
CBGCP	Concrete Box Girder Continuous Prestressed
CBGP	Concrete Box Girder Prestressed
CBGS	Concrete Box Girder Segmented
CBR	California Bearing Ratio
CCR	Code of Colorado Regulations, as amended
CDTPG	Concrete Double-Tee Prestressed Girder
CE	Construction Engineering
CF	Cubic Feet
CFS	Cubic Feet per Second
CG	Center of Gravity
CHP	Colorado Highway Patrol
CI	Cast Iron or Concrete on Rolled I-Beam
CIC	Concrete on Rolled I-Beam Continuous
CICK	Concrete on Rolled I-Beam Continuous & Composite
CICKP	Concrete on Rolled I-Beam Continuous & Composite Prestressed
CIK	Concrete on Rolled I-Beam Composite
CIKP	Concrete on Rolled I-Beam Composite Prestressed
CIP	Cast-in-Place or Cost in Place
CIR	Cold In-Place Recycling
Clr	Clear
cm	Centimeters
CM	Corrugated Metal
CMAQ	Congestion Mitigation Air Quality
CMP	Corrugated Metal Pipe
CMU	Concrete Masonry Unit
COC	Certificate of Compliance
Col	Column
Comp	Composite
Conc	Concrete
Conn	Connection
Const	Construction
Const Jt	Construction Joint
Cont	Continuous
Corr	Corrugated
CPE	Corrugated Polyethylene Pipe
CPG	Concrete Prestressed Girder (Precast)
CPGC	Concrete Prestressed Girder Continuous (Precast)
CPT	Corrugated Polyethylene Tubing
CR	County Road
CRF	Concrete Rigid Frame
CS	Curve to Spiral, Commercial Standard, Concrete Slab
CSC	Concrete Slab Continuous
CSG	Concrete Slab & Girder (Poured in Place)
CSGC	Concrete Slab & Girder Continuous (Poured in Place)
CSGCP	Concrete Slab & Girder Continuous Prestressed (Poured in Place)
CSGP	Concrete Slab & Girder Prestressed (Poured in Place)
Csk	Countersunk
CSL	Cross Hole Sonic Logging
CSP	Corrugated Steel Pipe or Concrete Slab Prestressed
CSPC	Concrete Slab Prestressed Continuous
CTB	Cement Treated Base
CTR	Certified Test Reports
Ctr	Center
CY	Cubic Yards
CZ	Clear Zone

D

D	Degree of Curvature, or Density
DB	Design Build
DAS	Deformed Anchor Stud
dB	decibels
DBA	Deformed Bar Anchor
Dbl	Double

GENERAL NOTES

1. ABBREVIATIONS SHOULD BE UPPER AND LOWER CASE LETTERS EXCEPT WHERE ALL UPPER CASE LETTERS ARE REQUIRED.
   Const Jt = Construction Joint
2. ACRONYMS SHALL BE ALL UPPER CASE LETTERS.
   CBC = Concrete Box Culvert
3. ABBREVIATIONS SHALL BE USED ONLY WHEN THE WORDS CANNOT BE COMPLETELY SPELLED OUT DUE TO MULTIPLE FACTORS, SUCH AS A LACK OF SPACE ON THE SHEET.

Deg, °F, °C,	Degrees (Thermal) - Degrees Fahrenheit, Degrees Celsius
Dgn	Design or Microstation Drawing
DH	Design Height or Avg height for qty calculations
DHV	Design Hour Volume
DHW	Design High Water
DI	Ductile Iron
Dia	Diameter
DNR	Department of Natural Resources
DOW	Division of Wildlife (Colorado)
DRCOG	Denver Regional Council of Governments
DTD	Division of Transportation Development (CDOT)
DTM	Digital Terrain Model
Dwg	AutoCAD Drawing

E

e.g.	Exempli Gratia (For Example)
EA	Environmental Assessment
EATB	Emulsified Asphalt Treated Base
EB	Eastbound
EF	Each Face
Elev	Elevation
Engr	Engineer
EPA	Environmental Protection Agency
EPDM	Ethylene Propylene Diene Monomer-class rubber
Eq	Equal
ESAL	Equivalent Single Axle Load
Est	Estimate
ET	Ending of Transition
EVT	Event Point (InRoads Terminology)
EW	Each Way
E	Expansion Bearing
Exc	Excavation
Exp Jt	Expansion Joint
Ext	Exterior

Computer File Information		Sheet Revisions	
Creation Date: 07/31/19		Date:	Comments
Designer Initials: JBK	(R-X)		
Last Modification Date: 07/31/19	(R-X)		
Detailer Initials: LTA	(R-X)		
CAD Ver.: MicroStation V8 Scale: Not to Scale Units: English	(R-X)		

Colorado Department of Transportation
2829 West Howard Place
CDOT HQ, 3rd Floor
Denver, CO 80204
Phone: 303-757-9021 FAX: 303-757-9868
Engineering and Standards Services JBK

ACRONYMS AND ABBREVIATIONS

Issued by Engineering and Standards Services: July 31, 2019

STANDARD PLAN NO.
M-100-2
Standard Sheet No. 1 of 4
Project Sheet Number:

F

F	Fixed Bearing
FL	Flow Line
FAA	Federal Aviation Administration
FASB	Foomed Asphalt Stabilized Base
FCM	Fracture Critical Member
FDR	Full Depth Reclamation
Fed	Federal
FEMA	Federal Emergency Management Agency
FES	Flared End Section
FF	Far Face or Front Face
Fig	Figure
Fin	Finished
Fl	Floor
Flg	Flange
FM	Factory Mutual
FMM	Field Materials Manual
FPM	Feet Per Minute
FPS	Feet Per Second
FRA	Federal Railroad Administration
Freq	Frequency
FRP	Fiber Reinforced Polymer
FS	Planned Finish Surface
Ft	Feet
Ft Kip	Foot Kips
Ft Lb	Foot Pounds
FTA	Federal Transit Administrotion
Ftg	Footing
FWD	Falling Weight Deflectometer

G

Ga	Goge or Gauge
Gal	Gallons
Galv	Golvanized
Gd	Guided expansion bearing
Gir, G	Girder
GIS	Geographical Information System
GL	Girt Line
GPM	Gallons Per Minute
GPS	Global Positioning System
GRI	Geosynthetic Research Institute
GRS	Geosynthetic Reinforced Soil
GSI	Geosynthetic Institute

H

HAS	Headed Anchor Stud
HAZMAT	Hazardous Materials
HC	Horizontal Clearance
HCL	Horizontal Control Line
HCM	Highway Capacity Manual
Hd	Head
HDPE	High Density Polyethylene
HDPP	High Density Polypropylene
Hex Hd	Hexagonal Head
HID	High Intensity Discharge (Lamps)
HIR	Hot In-Place Recycling
HLMR	Highload Multi-Rotational
HMA	Hot Mix Asphalt
Horiz	Horizantol
HOV	High-Occupancy Vehicle
HP	Horsepower
HPC	High Performance Concrete
HS	High Strength
Ht	Height
HW	High Water
Hwy	Highway
Hyd	Hydroulic

I

ICEA	Insuloted Cable Engineers Association
ID	Inside Diameter
IMP	Incident Management Plan
In. Kips	Inch Kips
In. Lb.	Inch Pounds
In.	Inches
Incl	Included
Int	Interior
Inv	Invert
IRI	Internationol Roughness Index
ISO	International Organization for Standards
ITAA	Information Technology Association of America
ITS	Intelligent Transportation System
IVHS	Intelligent Vehicle Highway System

J

JB	Junction Box
JPCP	Jointed Plain Concrete Pavement
Jt	Joint

K

Kip	Thousond Pounds
KSF	kips per square foot
KSI	Kips per squore inch
KW	Kilowatt

L

L	Length, Angle(steel)
Lb	Pounds
Lb/Ft	pound per foot
Lb/SY	Pounds per square yard
Lb-Ft	pound foot
LCCA	Life Cycle Cost Analysis
LED	Light Emitting Diode
LEED	Leadership in Energy and Environmental Design
LF	Linear Feet
LFD	Load Factor Design
LL	Liquid Limit
LLDPE	Linear Low-Density Polyethylene
LRFD	Lood and Resistance Factor Design
LS	Lump Sum or Length of Spiral
Lt	Left
LTB	Lime Treoted Base
LTDS	Required Long Term Design Strength
Lum	Luminaire

M

m	Meters
MA	Mobile Attenuator
Maint	Maintenance
MARV	Minimum Average Roll Value
Matl	Material
Max	Maximum
MBTA	Migratory Bird Treoty Act
MFBM	Thousand Foot Boord Measure
Mfg	Manufactured or Manufacturer
MHT	Method of Handling Traffic
Mi	Mile
Min	Minimum
Misc	Miscellaneous
mm	Millimeters
MP	Milepost
MPH	Miles Per Hour
M_R	Resilient Modulus
MR	Modulus of Rupture

N

NAD	North American Datum
NAVD	North American Vertical Dotum
NB	Northbound, Total Number of Blocks
N_{DES}	Recommended SuperPave™ Gyratory Design Revolution
NDT	Nondestructive Testing
NECA	National Electrical Controctors Association
NEPA	Nationol Environmental Policy Act
NESC	National Electric Safety Code
NF	Near Face
NFPA	National Fire Protection Association
NGS	National Geodetic Survey
NGVD	National Geodetic Vertical Datum of 1929
NHS	National Highwoy System
NICET	Natiana Institute for Certification of Engineering Technologies
NIP	Nail in Place
NMAS	Nominal Moximum Aggregote Size
No	Number
Nom	Nominal
NPDES	National Pollutont Discharge Elimination System
NPT	Nationol Pipe Thread
NS	Near Side
NTCIP	National Transportation Communications for ITS Protocol
NTP	Notice to Proceed
NTS	Not to Scale

Computer File Information	
Creation Date: 07/31/19	
Designer Initials: JBK	(R-X)
Last Modification Date: 07/31/19	(R-X)
Detailer Initials: LTA	(R-X)
CAD Ver.: MicroStation V8 Scale: Not to Scale Units: English	(R-X)

Sheet Revisions	
Date:	Comments

Colorado Department of Transportation
2829 West Howard Place
CDOT HQ, 3rd Floor
Denver, CO 80204
Phone: 303-757-9021 FAX: 303-757-9868
Engineering and Standards Services JBK

ACRONYMS AND ABBREVIATIONS

Issued by Engineering and Standards Services: July 31, 2019

STANDARD PLAN NO.
M-100-2
Standard Sheet No. 2 of 4
Project Sheet Number:

O

OC	On Center
OD	Outside Diameter
OGFC	Open Grade Friction Course
OJT	On-the-Job Trainee or On-the-Job Training
Opp Hand	Opposite Hand
oz	Ounces

P

PC	Point of Curve
PCA	Portland Cement Association
PCBC	Concrete Box Culvert Precast
PCC	Point of Compound Curve
PCCP	Portland Cement Concrete Pavement
PDA	Pile Driving Analyzer
PE	Preliminary Engineering, or Professional Engineer or Permanent Easement
Ped	Pedestrian
PG	Profile Grade or Performance Grade
PGL	Profile Grade Line
PI	Point of Intersection
PL, Pl	Plate
PLS	Professional Land Surveyor
PM	Project Manager
PMBB	Plant Mix Bituminous Base
PMBP	Plant Mix Bituminous Pavement
PMSC	Plant Mix Seal Coat
POC	Point on Curve
POSS	Point of Slope Selection
POT	Point on Tangent
PPE	Personal Protective Equipment
PRC	Point of Reverse Curve
Proj	Project or Projection
psf	Pounds per square foot
psi	Pounds per square inch
PT	Point of Tangent
PTFE	Polytetrafluoroethylene
PTI	Post-Tensioning Institute
PUC	Public Utilities Commission
PVC	Poly Vinyl Chloride (pipe), Point of Vertical Curve
PVI	Point of Vertical Intersection
Pvmt	Pavement
PVT	Point of Vertical Tangency

Q

Q	Peak Discharge or Flow Volume
QA	Quality Assurance
QC	Quality Control
QMP	Quality Management Plan
QML	Qualified Manufacturers List

R

R	Radius
RA	Rubble Arch
RAC	Rubble Arch Culvert
rad	radians
RAP	Reclaimed Asphalt Pavement
RAS	Reclaimed Asphalt Shingles
RC	Reverse Crown
RCC	Roller Compacted Concrete
RCP	Reinforced Concrete Pipe
RCPC	Reinforced Concrete Pipe Culvert
Rdwy	Roadway
RE	Resident Engineer or Railroad Easement
Ref	Reference
Reinf	Reinforcing
Rem	Remove or Removal
Repl	Replace
Req	Required
Rev	Revised, Revision
RG	Riveted Plate Girder
RGC	Riveted Plate Girder Continuous
RL	Reinforcement Length
RME	Region Materials Engineer
rpm	Revolutions Per Minute
RSC	Rigid Steel Conduit
RSS	Reinforced Soil Slope
Rt	Right
RTD	Region Transportation Director or Regional Transportation District
RWIS	Road Weather Information System

S

SA	Steel Arch
SAC	Steel Arch Culvert
San	Sanitary
SB	Southbound
SBA	Small Business Administration
SBG	Steel Box Girder
SBGC	Steel Box Girder Continuous
SC	Spiral to Curve
Sch	Schedule
SCS	Spiral Curve Spiral
SDG	Steel Deck Girder
SDGC	Steel Deck Girder with Floor Beam System
SDGCK	Steel Deck Girder Continuous & Composite
SDI	Steel Decks Institute
SDT	Steel Deck Truss
Sdwk	Sidewalk
Sect	Section
SF	Square Feet
SH	State Highway
Shldr	Shoulder
SHPO	State Historic Preservation Office
SHRP	Strategic Highway Research Program
Sht	Sheet
SIGN	Overhead Sign
SIGNB	Overhead Sign-Butterfly
SIGNC	Overhead Sign-Cantilever
SIGND	Overhead Sign + Cantilever
Sim	Similar
SIP	Stay in Place
SJI	Steel Joists Institute
SLT	Steel Low Truss
SMA	Stone Matrix Asphalt
SN	Structural Number
Spa	Spaces or Spaced
Specs	Specifications
SpG	Specific Gravity
Spl	Splice
Sq In	Square Inches
Sq Mi	Square Miles
Sq	Square
SRW	Segmental Retaining Walls
SSE	Steel Stringer-Earth Filled
SSM	Steel Stringer-Metal Plank Deck
SSMC	Steel Stringer-Metal Plank Deck Continuous
SSPC	Society for Protective Coatings
SSS	Steel Stringer-Timber Deck
SSSC	Steel Stringer-Timber Deck Continuous
ST	Spiral to Tangent
St	Straight or Street
Sta	Station
Std	Standard
STG	Steel Thru Girder
Str	Structure, Structural
STT	Steel Thru Truss
SUSP	Suspension Bridge
SY	Square Yards
Sym	Symmetrical

Computer File Information	
Creation Date: 07/31/19	
Designer Initials: JBK	R-X
Last Modification Date: 07/31/19	R-X
Detailer Initials: LTA	R-X
CAD Ver.: MicroStation V8 Scale: Not to Scale Units: English	R-X

Sheet Revisions	
Date:	Comments

Colorado Department of Transportation
2829 West Howard Place
CDOT HQ, 3rd Floor
Denver, CO 80204
Phone: 303-757-9021 FAX: 303-757-9868
Engineering and Standards Services JBK

ACRONYMS AND ABBREVIATIONS

Issued by Engineering and Standards Services: July 31, 2019

STANDARD PLAN NO.
M-100-2
Standard Sheet No. 3 of 4
Project Sheet Number:

T

T&B	Top and Bottom
T&E	Threatened & Endangered Species
T	Tons
TAS	Threaded Anchor Stud
TBC	Timber Box Culvert
TC	Tangent to Curve
TCD	Traffic Control Devices
TCP	Traffic Control Plan
TD	Timber Stringer (Untreated) Concrete Deck
TDH	Total Dynamic Head
Temp	Temporary or Temperature
Thd	Thread
THHN	Thermoplastic High Heat-resistant Nylon coated (Insulation designation for wire)
THWN	Thermoplastic High Water-resistant Nylon coated (Insulation designation for wire)
TIG	Tungsten Inert Gas (Welding)
TLA	Timber Laminated Arch (Glulam)
TLS	Timber Laminated Stringer(Glulam)
TLT	Timber Low Truss
TM	Timber Stringer (Untreated) Metal Deck
TMP	Transportation Management Plan
Tot	Total
TPI	Threads per Inch
TS	Tangent to Spiral, Timber Stringer (Untreated) Timber Deck
TSLAB	Timber Slab
TTC	Timber Culvert
TTD	Timber Stringer-Concrete Deck
TTM	Timber Stringer- Metal Deck
TTS	Timber Stringer- Timber Deck
TTT	Timber Thru Truss
TUNC	Tunnel-Concrete Lined
TUNR	Tunnel-Thru Rock-No Lining
Typ	Typical

U

UG	Underground
UNC	Uniform National Coarse (screw thread)
UNCC	Utility Notification Center of Colorado
UNF	Uniform National Fine (screw thread)
UND	Unless Noted Otherwise
UPRR	Union Pacific Railroad
UPS	Uninterruptible Power Supply
USACE	United States Army Corp of Engineers
USCS	Unified Soil Classification System
USDA	United States Department of Agriculture
USDOT	United States Department of Transportation
USFWS	United States Fish and Wildlife Service
USGS	US Geological Survey
Util	Utility or Utilities
UV	Ultraviolet

V

VC	Vertical Curve
VCP	Vitrified Clay Pipe
Veh	Vehicle
Vert	Vertical
VFA	Voids Filled With Asphalt
VMA	Voids in the Mineral Aggregate
VMS	Variable Message Sign
Vol	Volume
VPC	Vertical Point of Curvature
VPI	Vertical Point of Intersection
VPT	Vertical Point of Tangency

W

W/C	Water-Cement Ratio
WALL	Retaining Wall
WB	Westbound
WBS	Work Breakdown Structure
WF	Wide Flange (Steel section)
WG	Welded Girder
WGC	Welded Girder Continuous
WGCK	Welded Girder Continuous & Composite
WGCKP	Welded Girder Continuous, Composite Prestressed
WGK	Welded Girder Composite
WGKP	Welded Girder Composite Prestressed
WIMS	Weigh-In-Motion Station
WP	Work Point
WQCD	Water Quality Control Division (Colorado Department of Public Health and Environment)
WRI	Wire Reinforcement Institute
WS	Water Surface
WSN	Weighted Structural Number
Wt	Weight
WWF	Welded Wire Fabric, typically referred to very light gauge wire for crack control
WWR	Welded Wire Reinforcement

Y

Yd	Yard

SYMBOLS

400	#4 REBAR BENDING SHAPE
500	#5 REBAR BENDING SHAPE
600	#6 REBAR BENDING SHAPE
@	at
&	and
ϕ ∅	Diameter
°, ', "	Degrees, Minutes, Seconds
', "	Feet, inches
#	Number or Pound
(E)	Epoxy Coated Rebar
(N)	Non-Epoxy Coated Rebar
(GXX)	Girder Label
°F	Fahrenheit
°C	Celsius
≈	Approximate
#	Interstate Highway
#	US Highway
#	State Highway

Computer File Information		Sheet Revisions	
Creation Date: 07/31/19		Date:	Comments
Designer Initials: JBK	(R-X)		
Last Modification Date: 07/31/19	(R-X)		
Detailer Initials: LTA	(R-X)		
CAD Ver.: MicroStation V8 Scale: Not to Scale Units: English	(R-X)		

Colorado Department of Transportation
2829 West Howard Place
CDOT HQ, 3rd Floor
Denver, CO 80204
Phone: 303-757-9021 FAX: 303-757-9868
Engineering and Standards Services JBK

ACRONYMS AND ABBREVIATIONS

Issued by Engineering and Standards Services: July 31, 2019

STANDARD PLAN NO.
M-100-2
Standard Sheet No. 4 of 4
Project Sheet Number:

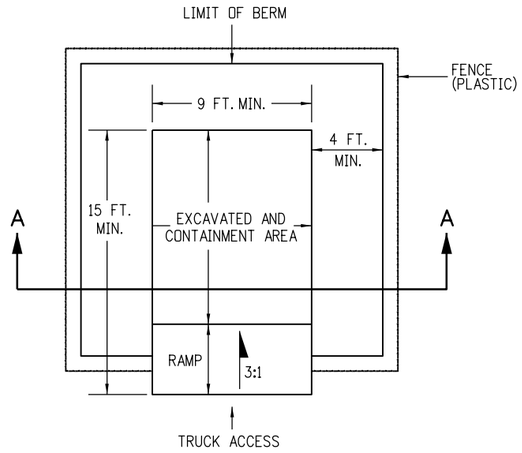

PLAN VIEW

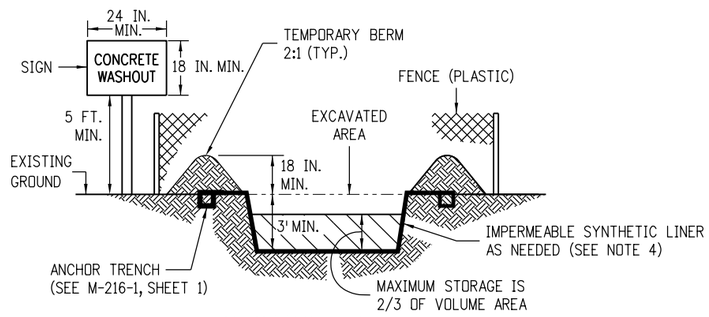

SECTION A-A

NOTES:

1. A FENCE (PLASTIC) CONFORMING TO SECTION 607 SHALL BE INSTALLED AROUND THE CONCRETE WASHOUT STRUCTURE, EXCEPT AT THE OPENING.
2. THE CONCRETE WASHOUT SIGN SHALL HAVE LETTERS AT LEAST 3 INCHES HIGH AND CONFORM TO SUBSECTION 630.02.
3. ALL MATERIALS AND LABOR TO COMPLETE THE CONCRETE WASHOUT STRUCTURE SHALL BE INCLUDED IN THE COST OF WORK AND NOT PAID FOR SEPARATELY.
4. THE BOTTOM OF EXCAVATION SHALL BE A MINIMUM OF FIVE FEET ABOVE GROUND WATER. IF NOT, THE BOTTOM OF EXCAVATION SHALL BE IN ACCORDANCE WITH 208.02 (k).
5. THE PAY ITEM NUMBER FOR CONCRETE WASHOUT STRUCTURE (EACH) IS 208-00045.

CONCRETE WASHOUT STRUCTURE

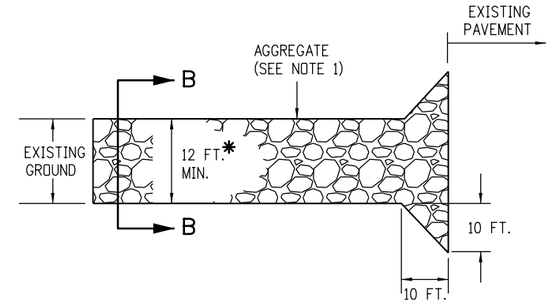

PLAN VIEW

* SHALL EXTEND FULL WIDTH OF INGRESS AND EGRESS OPERATION.

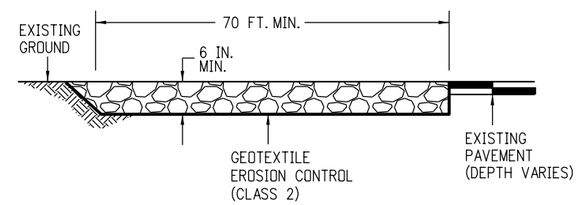

ELEVATION SECTION

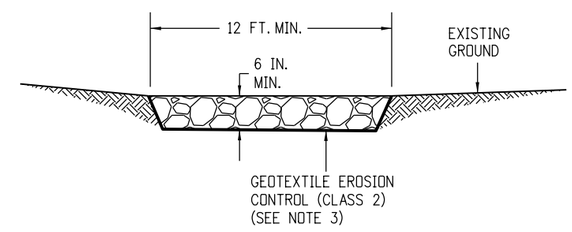

SECTION B-B

NOTES:

1. AGGREGATE SHALL CONFORM TO SUBSECTION 208.02 (m).
2. THE CONTRACTOR SHALL PROTECT CURB AND GUTTER THAT CROSSES THE ENTRANCE FROM DAMAGE, WHILE NOT BLOCKING FLOW OF WATER THRU STRUCTURE. PROTECTION OF THE CURB AND GUTTER SHALL BE INCLUDED IN THE COST OF WORK AND NOT PAID FOR SEPARATELY.
3. GEOTEXTILE SHALL CONFORM TO SUBSECTION 712.08.
4. ALL MATERIALS AND LABOR TO COMPLETE THE VEHICLE TRACKING PAD SHALL BE INCLUDED IN THE COST OF WORK AND NOT PAID FOR SEPARATELY.
5. THE PAY ITEM NUMBER FOR VEHICLE TRACKING PAD (EACH) IS 208-00070.

VEHICLE TRACKING PAD

Computer File Information		Sheet Revisions	
Creation Date: 07/31/19		Date:	Comments
Designer Initials: DK	(R-X)	05/16/24	Revised Concrete Washout Structure Notes 1 and 4, and Vehicle Tracking Pad Note 1.
Last Modification Date: 05/16/24	(R-X)		
Detailer Initials: LTA	(R-X)		
CAD Ver.: MicroStation V8 Scale: Not to Scale Units: English	(R-X)		

Colorado Department of Transportation
2829 West Howard Place
CDOT HQ, 3rd Floor
Denver, CO 80204
Phone: 303-757-9021 FAX: 303-757-9868
Construction Engineering Services DK

TEMPORARY EROSION CONTROL

Issued by the Project Development Branch: July 31, 2019

STANDARD PLAN NO.
M-208-1
Standard Sheet No. 1 of 11
Project Sheet Number:

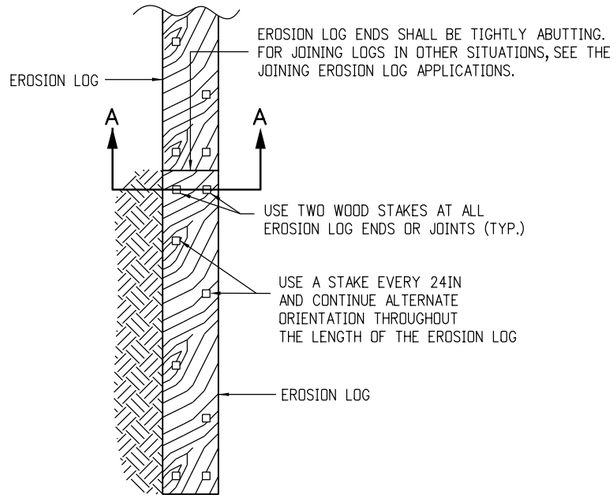

PLAN VIEW

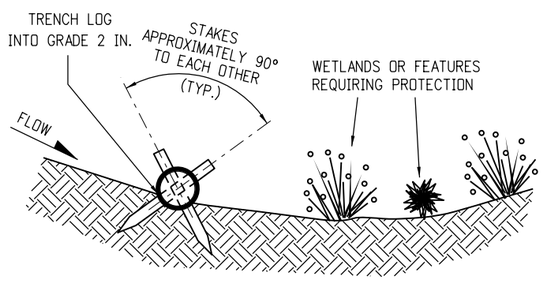

SECTION A-A

TYPICAL STAKE INSTALLATION

EROSION LOGS PAY ITEMS	
NUMBER	DESCRIPTION
208-00012	TYPE 1 (9 IN.)
208-00002	TYPE 1 (12 IN.)
208-00013	TYPE 1 (20 IN.)
208-00007	TYPE 2 (8 IN.)
208-00008	TYPE 2 (12 IN.)
208-00009	TYPE 2 (18 IN.)
208-00022	TYPE 3 (9 IN.)
208-00023	TYPE 3 (12 IN.)
208-00024	TYPE 3 (20 IN.)

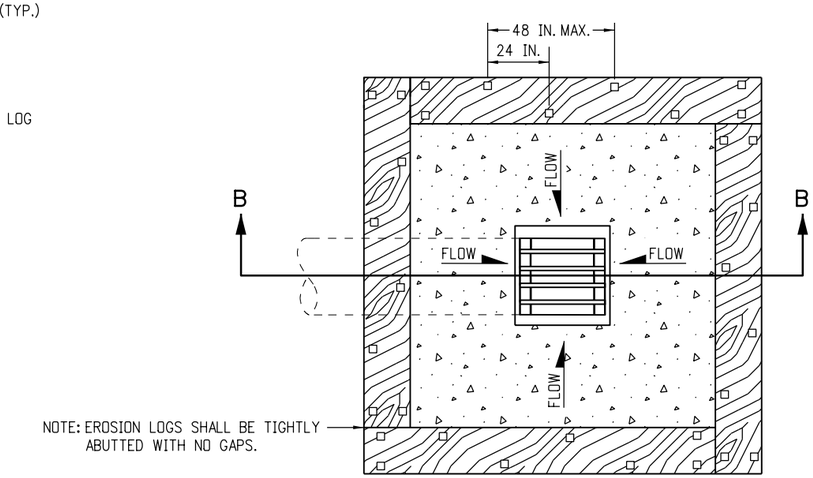

PLAN VIEW

NOTE: THE TOPS OF ALL STAKES SHALL NOT EXTEND MORE THAN 2 INCHES ABOVE THE TOPS OF EROSION LOGS.

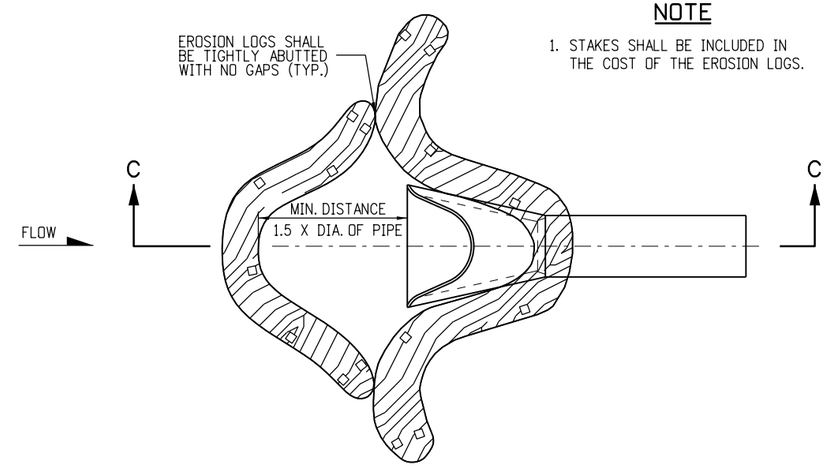

PLAN VIEW

NOTE

1. STAKES SHALL BE INCLUDED IN THE COST OF THE EROSION LOGS.

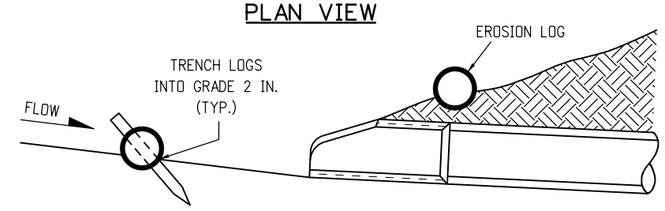

SECTION C-C
(NOT ALL LOGS SHOWN)

NOTE: TOP OF STAKE SHALL NOT EXTEND PAST TOP OF EROSION LOG MORE THAN 2 IN.

EROSION LOG CULVERT INLET PROTECTION

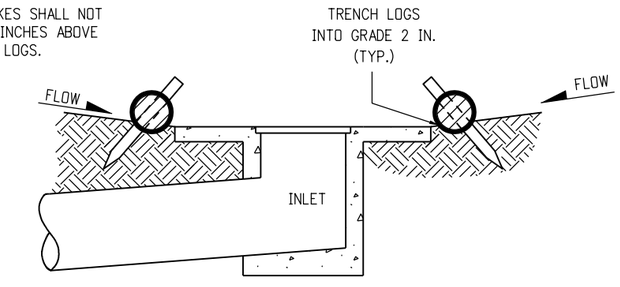

SECTION B-B

NOTE: LOCATE EROSION LOGS AT THE OUTSIDE EDGE OF THE CONCRETE APRON.

EROSION LOG FILTER AT DROP INLET

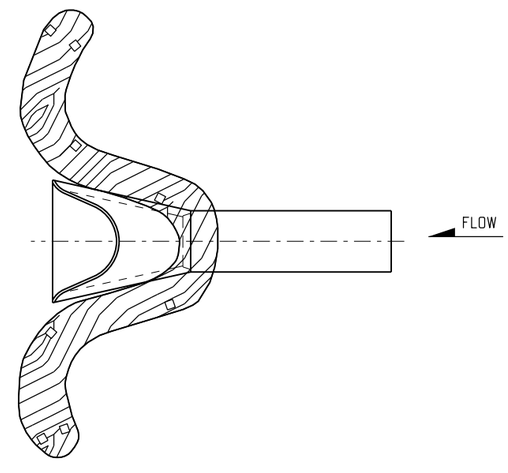

EROSION LOG CULVERT OUTLET PROTECTION

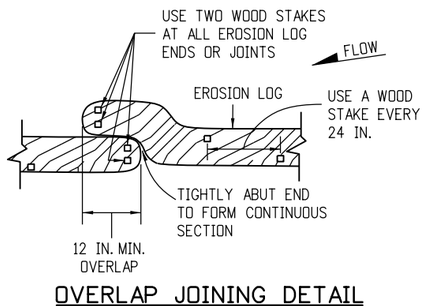

OVERLAP JOINING DETAIL

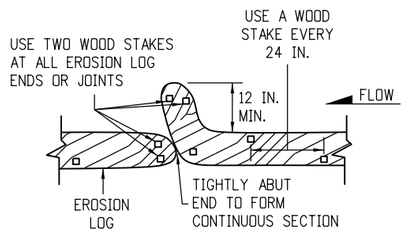

J-HOOK JOINING DETAIL

JOINING EROSION LOG APPLICATIONS

EROSION LOG (SEDIMENT CONTROL LOG) APPLICATIONS

Computer File Information		Sheet Revisions	
Creation Date: 07/31/19		Date:	Comments
Designer Initials: DK	(R-X)	05/16/24	Added "Erosion Logs...No Gaps" dimension note to the "... Drop Inlet" plan view. Revised title.
Last Modification Date: 05/16/24	(R-X)		
Detailer Initials: LTA	(R-X)		
CAD Ver.: MicroStation V8 Scale: Not to Scale Units: English	(R-X)		

Colorado Department of Transportation
2829 West Howard Place
CDOT HQ, 3rd Floor
Denver, CO 80204
Phone: 303-757-9021 FAX: 303-757-9868
Construction Engineering Services DK

TEMPORARY EROSION CONTROL

Issued by the Project Development Branch: July 31, 2019

STANDARD PLAN NO.
M-208-1
Standard Sheet No. 2 of 11
Project Sheet Number:

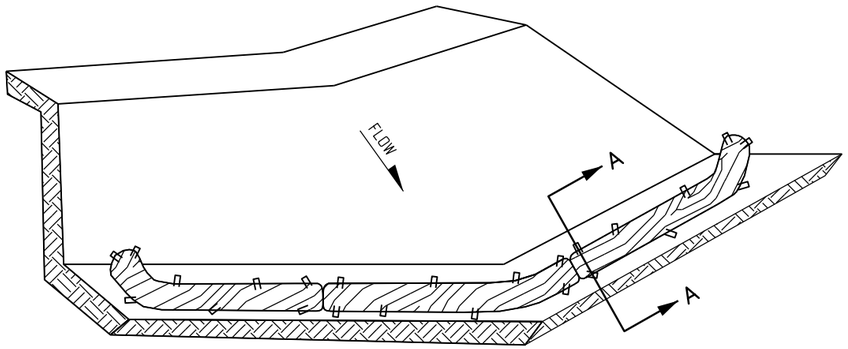

ISOMETRIC VIEW

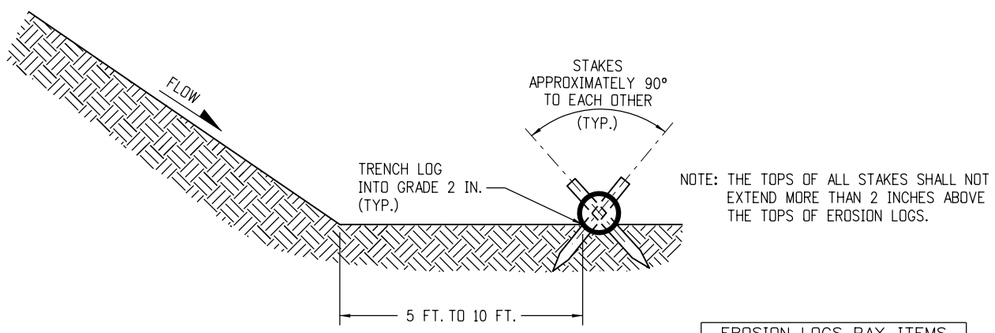

SECTION A-A

NOTES:

1. EROSION LOGS USED AT TOE OF SLOPE SHALL BE PLACED 5 TO 10 FEET BEYOND TOE OF SLOPE TO PROVIDE STORAGE CAPACITY.
2. EROSION LOGS SHALL BE PLACED ON THE CONTOUR WITH ENDS FLARED UP SLOPE.
3. SEE SHEET 2 OF 11 FOR JOINING LOGS DETAIL.

EROSION LOGS PAY ITEMS	
NUMBER	DESCRIPTION
208-00012	TYPE 1 (9 IN.)
208-00002	TYPE 1 (12 IN.)
208-00013	TYPE 1 (20 IN.)
208-00007	TYPE 2 (8 IN.)
208-00008	TYPE 2 (12 IN.)
208-00009	TYPE 2 (18 IN.)
208-00022	TYPE 3 (9 IN.)
208-00023	TYPE 3 (12 IN.)
208-00024	TYPE 3 (20 IN.)

EROSION LOG TOE OF SLOPE PROTECTION

NOTES

1. SILT FENCE SHALL HAVE A MAXIMUM DRAINAGE AREA OF ONE-QUARTER ACRE PER 100 FEET OF SILT FENCE LENGTH; MAXIMUM SLOPE LENGTH BEHIND BARRIER IS 100 FEET.
2. SILT FENCE USED AT TOE OF SLOPE SHALL BE PLACED 5 TO 10 FEET BEYOND TOE OF SLOPE TO PROVIDE STORAGE CAPACITY.
3. SILT FENCE SHALL BE PLACED PARALLEL TO THE CONTOUR WITH ENDS FLARED UP SLOPE.
4. THE MAXIMUM LENGTH OF EROSION LOGS OR SILT FENCES WITHOUT A FLARED END TURNING UPSLOPE IS 150 FEET.

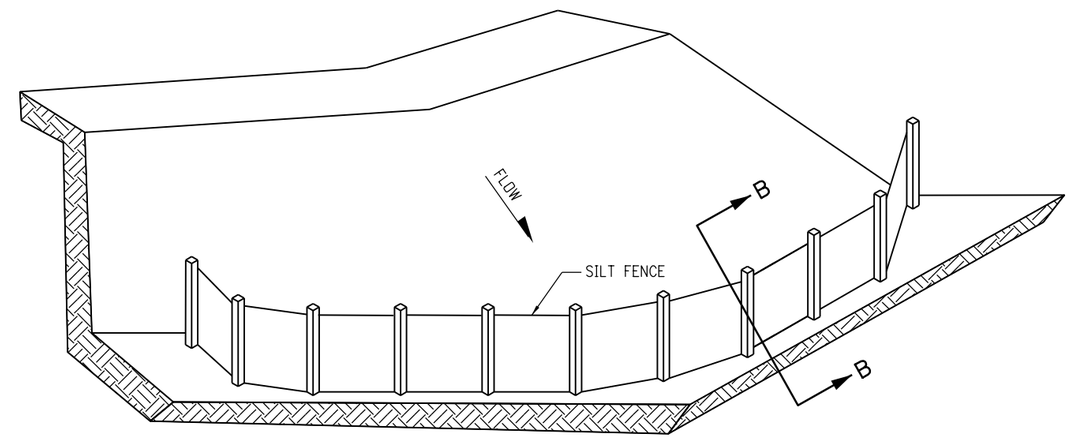

ISOMETRIC VIEW

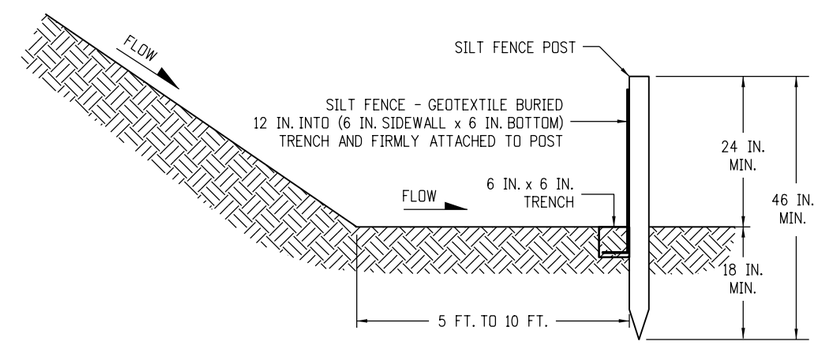

SECTION B-B

SILT FENCE TOE OF SLOPE PROTECTION

NOTE: THE PAY ITEM NUMBER FOR SILT FENCE (LF) IS 208-00020.

TOE OF SLOPE PROTECTION APPLICATIONS

Computer File Information		Sheet Revisions	
Creation Date: 07/31/19		Date:	Comments
Designer Initials: DK	(R-X)		
Last Modification Date: 05/16/24	(R-X)		
Detailer Initials: LTA	(R-X)		
CAD Ver.: MicroStation V8 Scale: Not to Scale Units: English	(R-X)		

Colorado Department of Transportation
2829 West Howard Place
CDOT HQ, 3rd Floor
Denver, CO 80204
Phone: 303-757-9021 FAX: 303-757-9868
Construction Engineering Services DK

TEMPORARY EROSION CONTROL

Issued by the Project Development Branch: July 31, 2019

STANDARD PLAN NO.
M-208-1
Standard Sheet No. 3 of 11
Project Sheet Number:

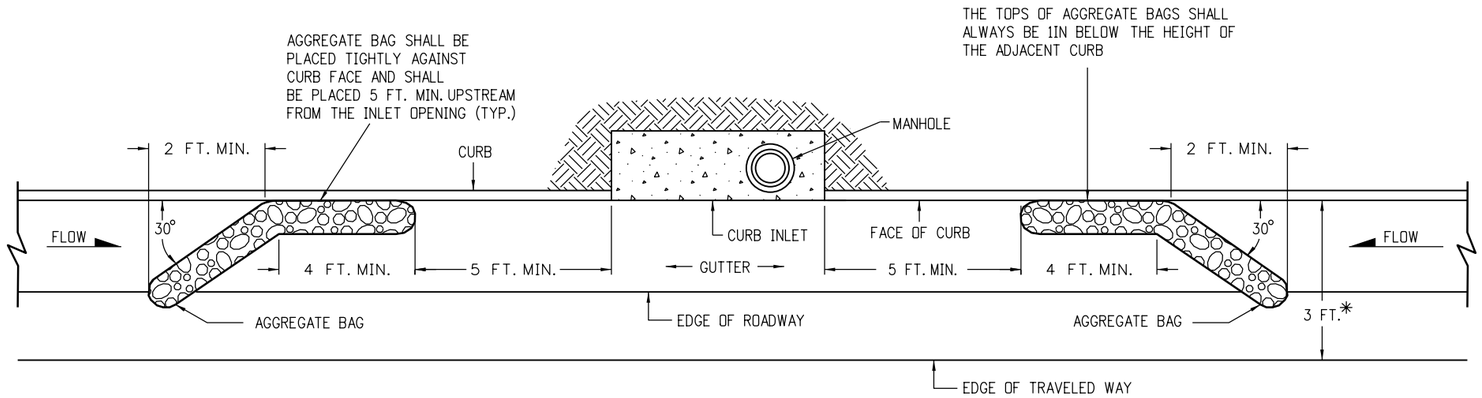

PLAN VIEW

* NOTE: USE AGGREGATE BAGS ONLY WHEN THERE IS A MINIMUM CLEARANCE OF 3 FEET FROM THE EDGE OF THE TRAVELED WAY (INCLUDING CONDITIONS DURING DETOURS) TO THE FACE OF CURB.

LENGTH (L) OF INLET FT.	NUMBER OF AGGREGATE BAGS UPSTREAM OF INLET
0 - 5	1
6 - 10	2
L > 10	3

AGGREGATE BAGS AT STORM DRAIN INLET (TYPE I)

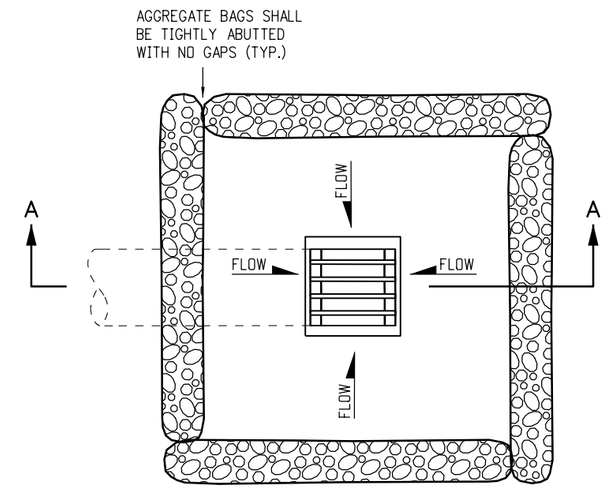

PLAN VIEW

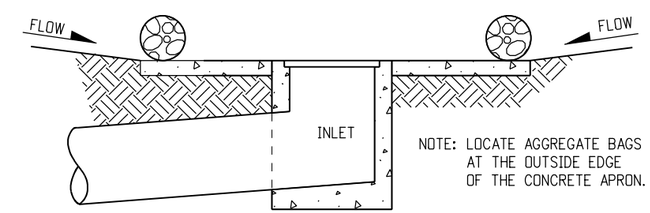

SECTION A-A

AGGREGATE BAGS AT DROP INLET

AGGREGATE BAG APPLICATIONS

NOTE: THE PAY ITEM NUMBER FOR AGGREGATE BAG (LF) IS 208-00035

Computer File Information		Sheet Revisions	
Creation Date: 07/31/19		Date:	Comments
Designer Initials: DK	R-X		
Last Modification Date: 05/16/24	R-X		
Detailer Initials: LTA	R-X		
CAD Ver.: MicroStation V8 Scale: Not to Scale Units: English	R-X		

Colorado Department of Transportation
2829 West Howard Place
CDOT HQ, 3rd Floor
Denver, CO 80204
Phone: 303-757-9021 FAX: 303-757-9868
Construction Engineering Services DK

TEMPORARY EROSION CONTROL

Issued by the Project Development Branch: July 31, 2019

STANDARD PLAN NO.
M-208-1
Standard Sheet No. 4 of 11
Project Sheet Number:

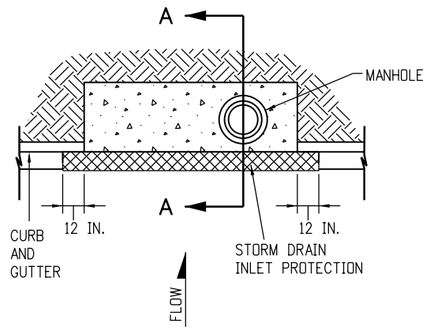

PLAN VIEW

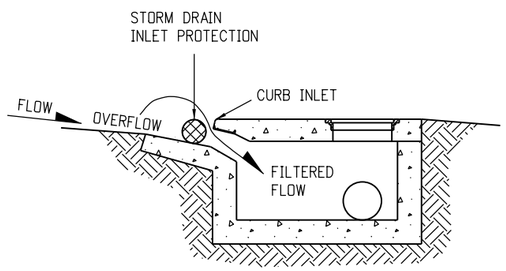

SECTION A-A

STORM DRAIN INLET PROTECTION (TYPE I)

NOTES:

1. INLET PROTECTION DEVICE SHALL EXTEND 12 INCHES PAST EACH END OF THE INLET.
2. THE PAY ITEM NUMBERS FOR STORM DRAIN INLET PROTECTION (TYPE I) ARE 208-00051 (LF), 208-00053 84 INCHES (EACH), 208-00057 144 INCHES (EACH), AND 208-00058 204 INCHES (EACH).
3. FOR STORM DRAIN INLET TYPES I AND II, IF THERE IS A MINIMUM CLEARANCE OF 3 FEET FROM THE EDGE OF THE TRAVELED WAY TO THE FACE OF CURB, USE THE AGGREGATE BAGS AT STORM DRAIN INLET (TYPE I) DETAIL ON SHEET 4 INSTEAD.

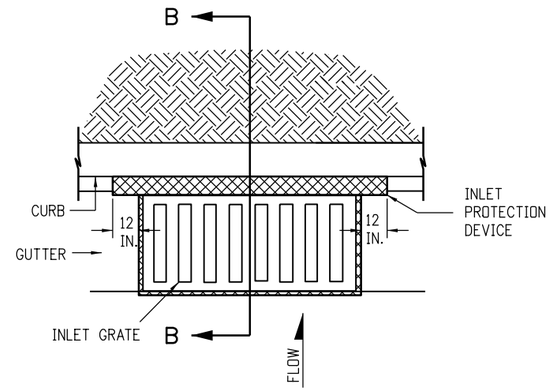

PLAN VIEW

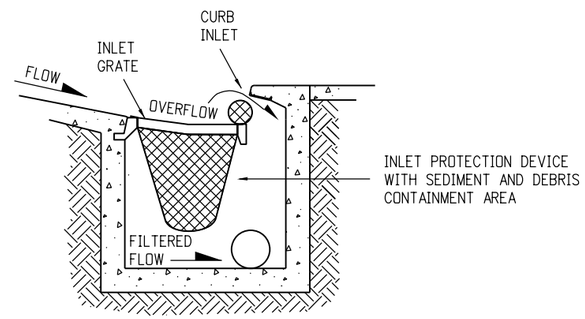

SECTION B-B

OPTION A

STORM DRAIN INLET PROTECTION (TYPE II)

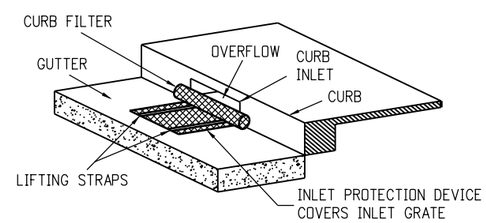

ISOMETRIC VIEW

OPTION B

STORM DRAIN INLET PROTECTION (TYPE II)

NOTE: THE PAY ITEM NUMBERS FOR STORM DRAIN INLET PROTECTION (TYPE II) ARE 208-00054 (EACH).

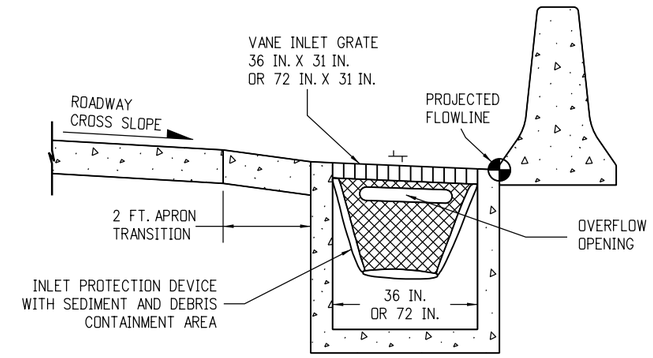

OPTION A

STORM DRAIN INLET PROTECTION (TYPE III)

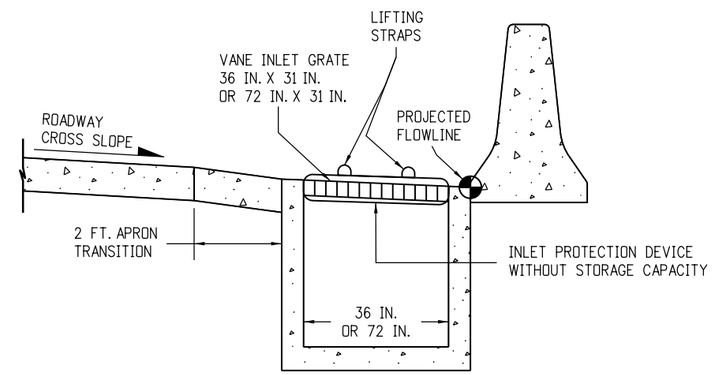

OPTION B

STORM DRAIN INLET PROTECTION (TYPE III)

NOTE: THE PAY ITEM NUMBER FOR STORM DRAIN INLET PROTECTION (TYPE III) (EACH) IS 208-00056.

STORM DRAIN INLET PROTECTION TYPES

Computer File Information		Sheet Revisions	
Creation Date: 07/31/19		Date:	Comments
Designer Initials: DK	(R-X)		
Last Modification Date: 05/16/24	(R-X)		
Detailer Initials: LTA	(R-X)		
CAD Ver.: MicroStation V8 Scale: Not to Scale Units: English	(R-X)		

Colorado Department of Transportation
2829 West Howard Place
CDOT HQ, 3rd Floor
Denver, CO 80204
Phone: 303-757-9021 FAX: 303-757-9868
Construction Engineering Services DK

TEMPORARY EROSION CONTROL

Issued by the Project Development Branch: July 31, 2019

STANDARD PLAN NO.
M-208-1
Standard Sheet No. 5 of 11
Project Sheet Number:

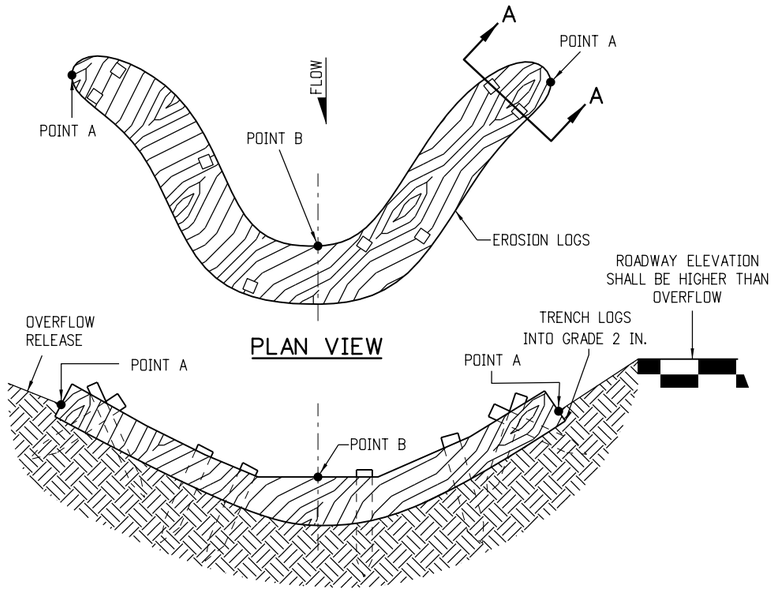

PLAN VIEW

NOTE: POINTS "A" SHALL BE A MINIMUM 4 IN. HIGHER THAN POINT "B".

ELEVATION

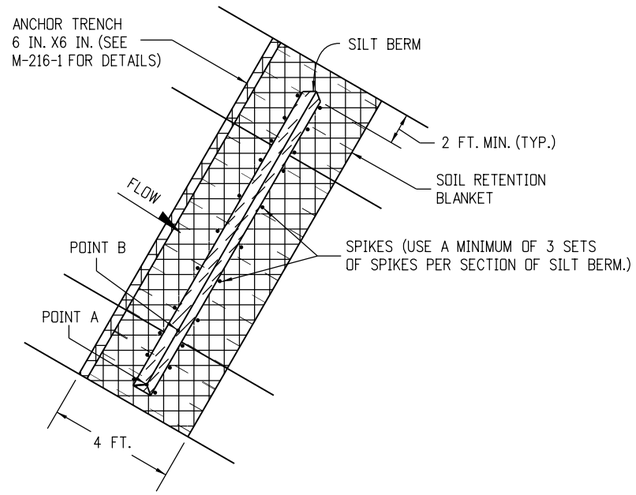

PLAN VIEW

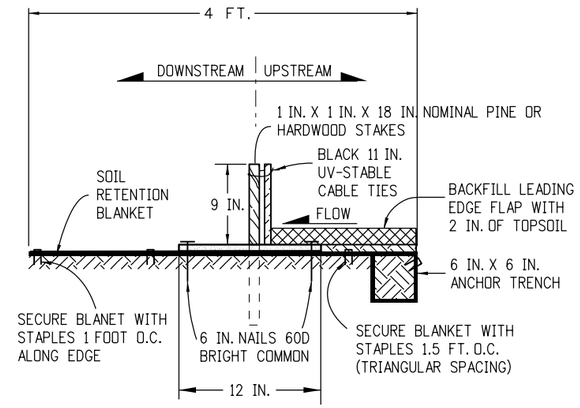

NOTES:
1. MINIMUM 4 NAILS PER SEGMENT (UPSTREAM).
2. MINIMUM 2 NAILS PER SEGMENT (DOWNSTREAM).
3. MINIMUM 2 WOOD STAKES PER SEGMENT.

SILT BERM (2) SECTION VIEW

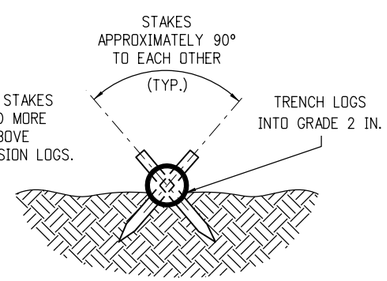

NOTE: THE TOPS OF ALL STAKES SHALL NOT EXTEND MORE THAN 2 INCHES ABOVE THE TOPS OF EROSION LOGS.

SECTION A-A

NOTES:
1. EROSION LOGS SHALL BE EMBEDDED 2 INCHES INTO THE SOIL.
2. EROSION LOGS SHALL BE TIGHTLY ABUTTED WITH NO GAPS.
3. V-SHAPED TEMPORARY DITCHES SHALL NOT BE USED. DITCHES SHAL BE GRADED IN A PARABOLIC OR TRAPEZOIDAL SHAPE.

EROSION LOG INSTALLATION

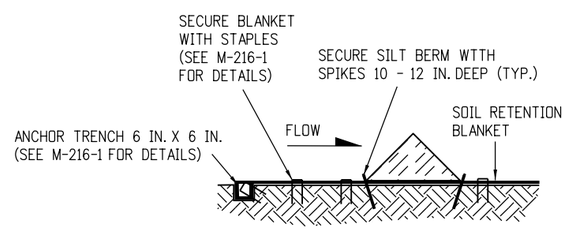

SILT BERM (1) SECTION VIEW

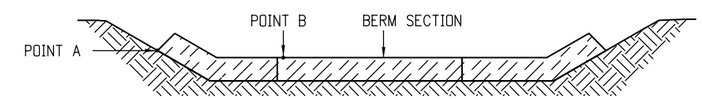

POINT "A" SHALL BE HIGHER THAN POINT "B" TO ENSURE THAT WATER FLOWS OVER THE BERM AND NOT AROUND THE ENDS.

FRONT VIEW

NOTES
1. ANCHOR SOIL RETENTION BLANKET INTO TRENCH WITH 8 INCHES MIN. STAPLES PLACED AT 1 FOOT INTERVALS ALONG EDGE.
2. FILL AND COMPACT TRENCH.
3. SECTIONS OF THE SILT BERM SHALL BE OVERLAPPED WITH NO GAPS.
4. FOR SLOPE AND CHANNEL SPACING SEE THE "SECTION VIEW ALONG DITCH FLOWLINE" DETAIL ON SHEET 11 OF 11.
5. SOIL RETENTION BLANKET SHALL ALWAYS BE REQUIRED.
6. THE PAY ITEM NUMBER FOR SILT BERM (LF) IS 208-00004.

SILT BERM INSTALLATION

DRAINAGE DITCH APPLICATIONS

Computer File Information		Sheet Revisions	
Creation Date: 07/31/19		Date:	Comments
Designer Initials: DK	(R-X)		
Last Modification Date: 05/16/24	(R-X)		
Detailer Initials: LTA	(R-X)		
CAD Ver.: MicroStation V8 Scale: Not to Scale Units: English	(R-X)		

Colorado Department of Transportation
2829 West Howard Place
CDOT HQ, 3rd Floor
Denver, CO 80204
Phone: 303-757-9021 FAX: 303-757-9868
Construction Engineering Services DK

TEMPORARY EROSION CONTROL

Issued by the Project Development Branch: July 31, 2019

STANDARD PLAN NO.
M-208-1
Standard Sheet No. 6 of 11
Project Sheet Number:

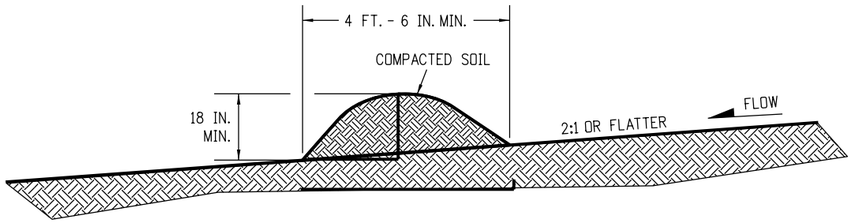

NOTES:

1. BERMS SHALL HAVE A HEIGHT OF 18 INCHES, SIDE SLOPES OF 2:1 OR FLATTER AND A MINIMUM BASE WIDTH OF 4 FT. -6 IN.
2. BERMS SHALL BE USED TO INTERCEPT AND DIVERT DRAINAGE TO A DESIGNATED OUTLET.
3. BERMS SHALL NOT BE USED WHERE DRAINAGE AREA EXCEEDS 10 ACRES.
4. BERMS SHALL BE CONSTRUCTED OUT OF ACCEPTABLE MATERIAL THAT CAN BE COMPACTED AND RECEIVE AT A MINIMUM HEAVY EQUIPMENT WHEEL ROLLED COMPACTION.
5. TEMPORARY BERMS SHALL BE CONSTRUCTED OUT OF EMBANKMENT (SUBSOIL) AND IN NO CIRCUMSTANCE CONSTRUCTED OUT OF SALVAGED TOPSOIL.
6. THE PAY ITEM NUMBER FOR TEMPORARY BERM (LF) IS 208-00300.

TEMPORARY BERM

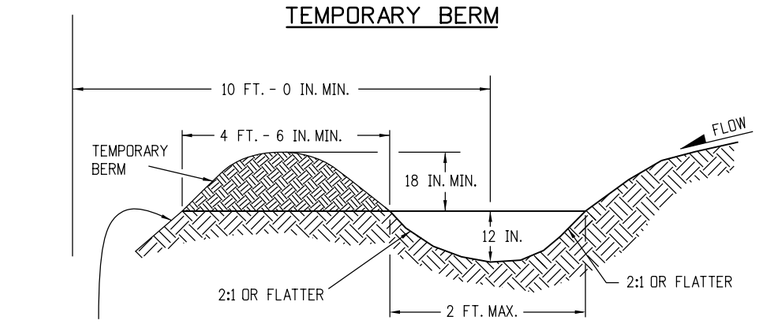

FOR BERMS TALLER THAN 2 FT., INSTALL TOE OF SLOPE CONTOL MEASURES. SEE SHEET 3 OF 11 FOR DETAILS.

NOTES:

1. TEMPORARY DIVERSION DITCHES SHALL BE CONSTRUCTED ACROSS THE SLOPE TO INTERCEPT RUNOFF AND DIRECT IT TO A STABLE OUTLET OR SEDIMENT TRAP.
2. USE THE TEMPORARY DIVERSION DITCH IMMEDIATELY ABOVE A NEW CUT, FILL SLOPE, OR AROUND THE PERIMETER OF A DISTURBED AREA.
3. THE GRADIENT ALONG THE FLOW PATH SHALL HAVE A POSITIVE GRADE TO ASSURE DRAINAGE, BUT SHALL NOT BE SO STEEP AS TO RESULT IN EROSION DUE TO HIGH VELOCITY.
4. THE DIVERSION FLOWLINE SHALL ALWAYS BE LOCATED A MINIMUM 10 FEET FROM THE OUTSIDE LIMITS OF DISTURBED AREA BOUNDARY.
6. DIVERSION BERMS SHALL BE CONSTRUCTED OUT OF EMBANKMENT (SUBSOIL) AND IN NO CIRCUMSTANCE CONSTRUCTED OUT OF SALVAGED TOPSOIL.
5. THE PAY ITEM NUMBER FOR TEMPORARY DIVERSION (LF) IS 208-00301.

TEMPORARY DIVERSION

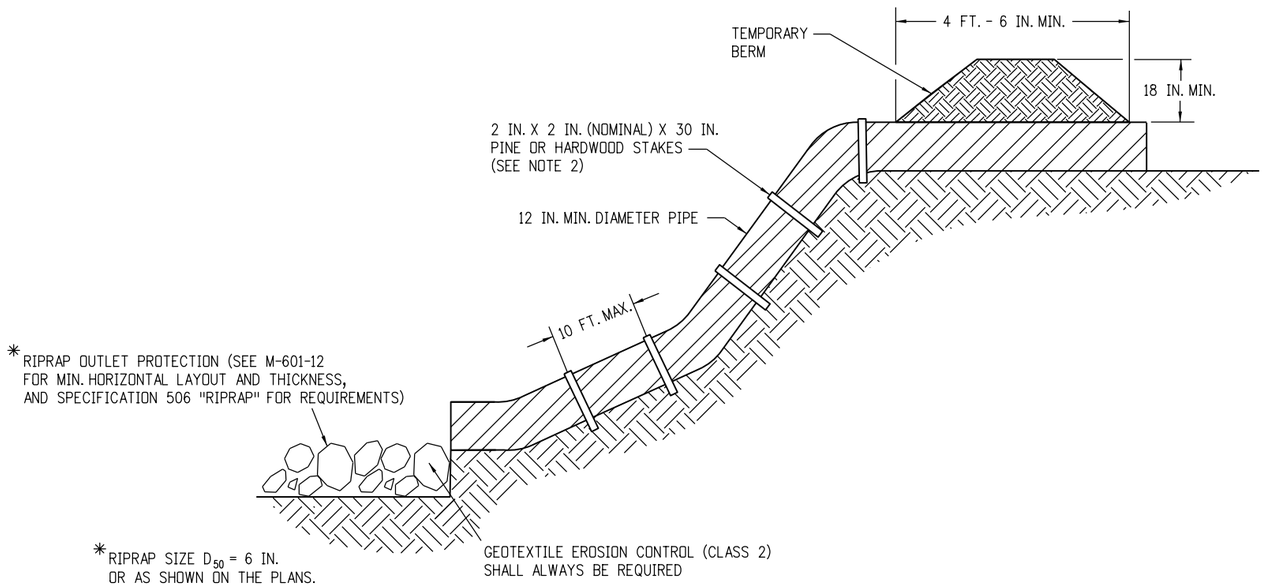

NOTES:

1. ANCHOR SIZE VARIES ACCORDING TO PIPE SIZE
2. TO SECURE THE PIPE, DRIVE STAKES INTO GROUND, THEN TIE A 12 GUAGE WIRE BETWEEN THEM ABOVE AND ACROSS THE PIPE'S WIDTH.
3. THE OUTLET SHALL BE ALIGNED WITH THE FLOW DIRECTION OF THE EXISTING GRADE. PERPENDICULAR DISCHARGE TO A CHANNEL SHALL NOT BE ACCEPTABLE.
4. THE GRADE AROUND THE INLET TO THE PIPE SHALL BE COMPACTED.
5. THE PAY ITEM NUMBER FOR TEMPORARY SLOPE DRAINS (LF) IS 208-00060.

TEMPORARY SLOPE DRAINS

GRADING APPLICATIONS

Computer File Information		Sheet Revisions	
		Date:	Comments
Creation Date: 07/31/19			
Designer Initials: DK	(R-X)		
Last Modification Date: 05/16/24	(R-X)		
Detailer Initials: LTA	(R-X)		
CAD Ver.: MicroStation V8 Scale: Not to Scale Units: English	(R-X)		

Colorado Department of Transportation
2829 West Howard Place
CDOT HQ, 3rd Floor
Denver, CO 80204
Phone: 303-757-9021 FAX: 303-757-9868
Construction Engineering Services DK

TEMPORARY EROSION CONTROL

Issued by the Project Development Branch: July 31, 2019

STANDARD PLAN NO.
M-208-1
Standard Sheet No. 7 of 11
Project Sheet Number:

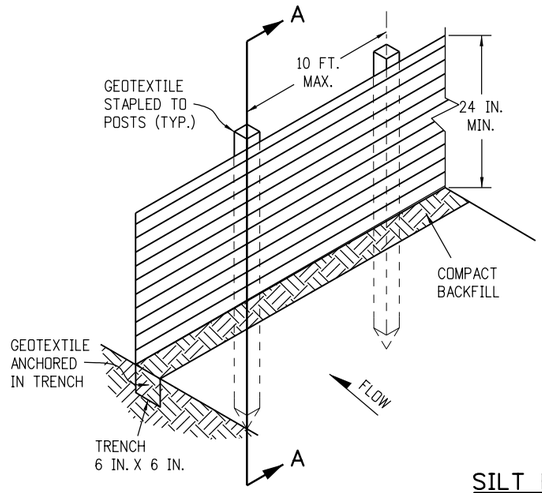

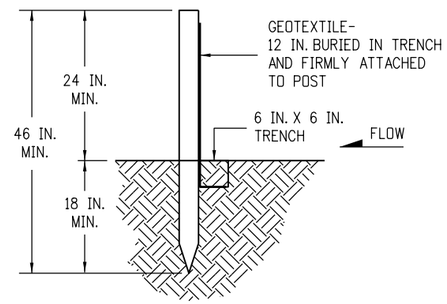

SECTION A-A

SILT FENCE

NOTES:

1. GEOTEXTILE SHALL BE ATTACHED TO WOOD POSTS WITH THREE OR MORE STAPLES PER POST. STAPLES SHALL BE HEAVY DUTY WIRE AND AT LEAST 1 INCH LONG.
2. WOOD POST SHALL BE INSTALLED PER 208.02 (b).
3. THE PAY ITEM NUMBER FOR SILT FENCE (LF) IS 208-00020.
4. THE SILT FENCE SHALL BE PLACED ON THE CONTOUR (AT THE SAME ELEVATION ±6 IN.). THE ENDS SHALL BE FLARED UP SLOPE (MINIMUM ELEVATION GAIN OF 18 IN.).

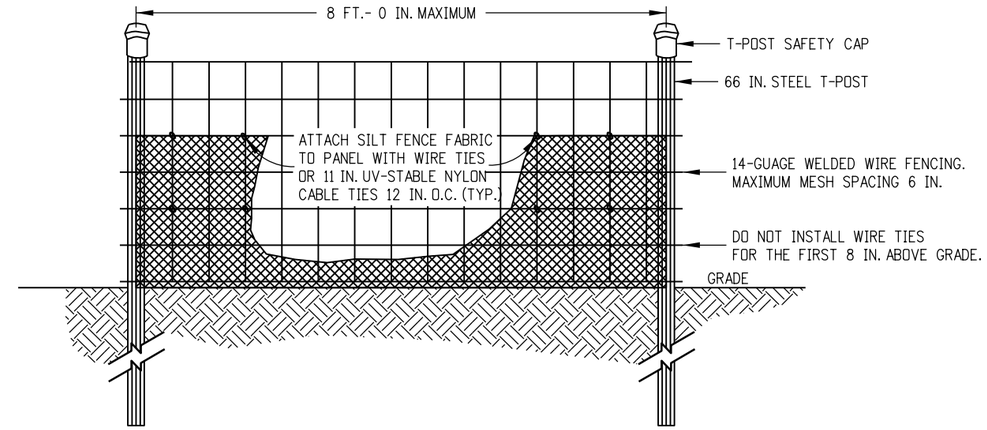

ELEVATION VIEW

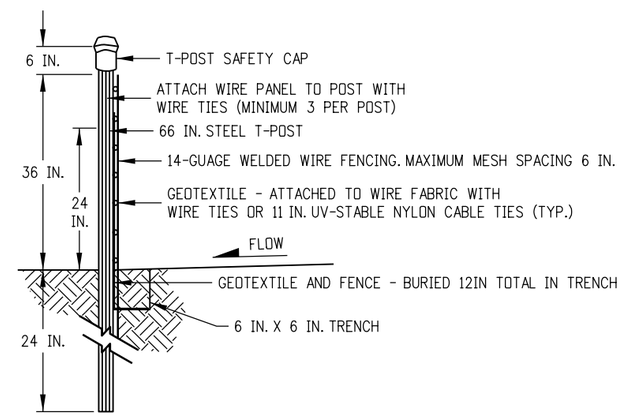

SIDE VIEW

NOTES:

1. THE ENDS OF THE SILT FENCE FABRIC SHALL BE JOINED TOGETHER BY WRAPPING APPROXIMATELY 6 INCHES OF EACH END AROUND A STEEL T-POST, THEN SECURED ALONG THE POST WITH WIRE TIES (MINIMUM 3 PER POST, AT THE TOP, MIDDLE, AND BOTTOM).
2. POSTS SHALL BE TIGHTLY ABUTTED WITH NO GAPS TO PREVENT POTENTIAL FLOW-THROUGH OF SEDIMENT AT JOINT.
3. SILT FENCES SHALL NOT BE USED FOR CHECK DAMS.
4. THE PAY ITEM NUMBER FOR SILT FENCE (REINFORCED) (LF) IS 208-00021.

SILT FENCE (REINFORCED)

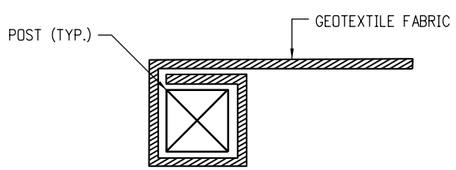

END SECTION DETAIL (PLAN VIEW)

NOTE:

1. THE END OF THE SILT FENCE FABRIC SHALL BE WRAPPED APPROX. 6 INCHES AROUND A WOODEN POST ONE FULL TURN, THEN SECURED ALONG THE POST WITH 6 HEAVY DUTY WIRE STAPLES AT LEAST 1 INCH LONG.

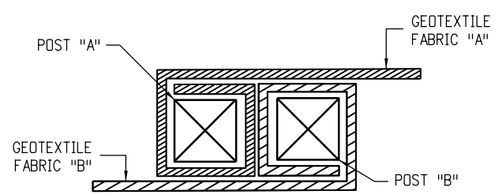

JOINING SECTION DETAIL (PLAN VIEW)

NOTES:

1. THE ENDS OF THE SILT FENCE FABRIC SHALL BE JOINED TOGETHER BY WRAPPING APPROX. 6 INCHES OF EACH END AROUND A WOODEN POST ONE FULL TURN, THEN SECURED ALONG THE POST WITH 6 HEAVY DUTY WIRE STAPLES AT LEAST 1 INCH LONG.
2. POSTS SHALL BE TIGHTLY ABUTTED WITH NO GAPS TO PREVENT POTENTIAL FLOW-THROUGH OF SEDIMENT AT JOINT.

SILT FENCE APPLICATIONS

Computer File Information	
Creation Date: 07/31/19	
Designer Initials: DK	(R-X)
Last Modification Date: 05/16/24	(R-X)
Detailer Initials: LTA	(R-X)
CAD Ver.: MicroStation V8 Scale: Not to Scale Units: English	(R-X)

Sheet Revisions	
Date:	Comments
05/16/24	Revised Silt Fence Note 2 and Silt Fence (Reinforced) Note 1.

Colorado Department of Transportation
2829 West Howard Place
CDOT HQ, 3rd Floor
Denver, CO 80204
Phone: 303-757-9021 FAX: 303-757-9868
Construction Engineering Services DK

TEMPORARY EROSION CONTROL

Issued by the Project Development Branch: July 31, 2019

STANDARD PLAN NO.
M-208-1
Standard Sheet No. 8 of 11
Project Sheet Number:

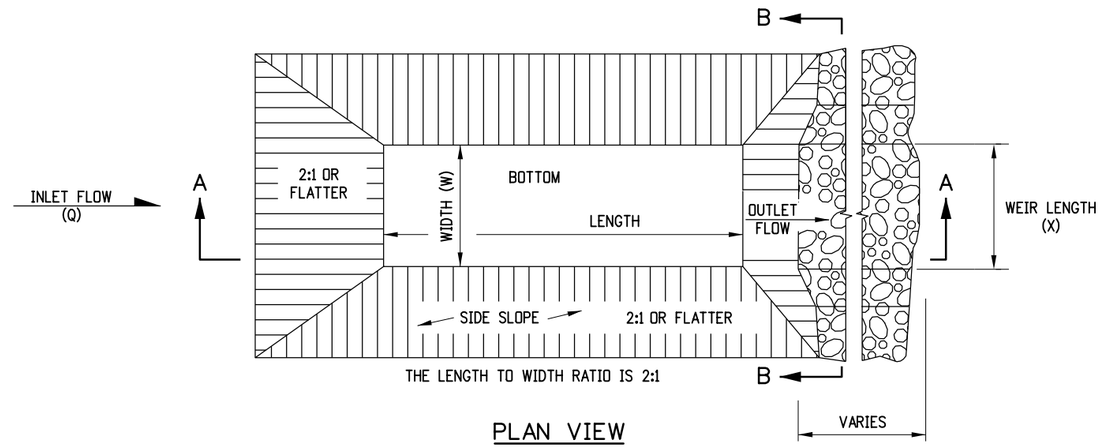

PLAN VIEW

NOTES

1. THE MAXIMUM DRAINAGE AREA IS 5 ACRES.
2. THE MAXIMUM STRUCTURE LIFE IS 2 YEARS.
3. THE STORAGE AREA IS 1800 CUBIC FEET PER ACRE.
4. THE MAXIMUM EMBANKMENT HEIGHT SHALL BE 5 FT. MEASURED ON THE DOWNSTREAM SIDE.
5. THE LENGTH/WIDTH RATIO MAY BE ADJUSTED TO MEET SITE CONDITIONS WHEN APPROVED BY THE ENGINEER.
6. WIDTH (W) OF SEDIMENT TRAP IS APPROXIMATELY EQUAL TO THE WEIR LENGTH (X).
7. SEDIMENT TRAP DESIGN SHALL BE APPROVED BY THE ENGINEER.
8. THE DOWN GRADE FROM WEIR SHALL BE STABLE AND NON-ERODIABLE.
9. THE PAY ITEM NUMBER FOR SEDIMENT TRAP (EACH) IS 208-00033.

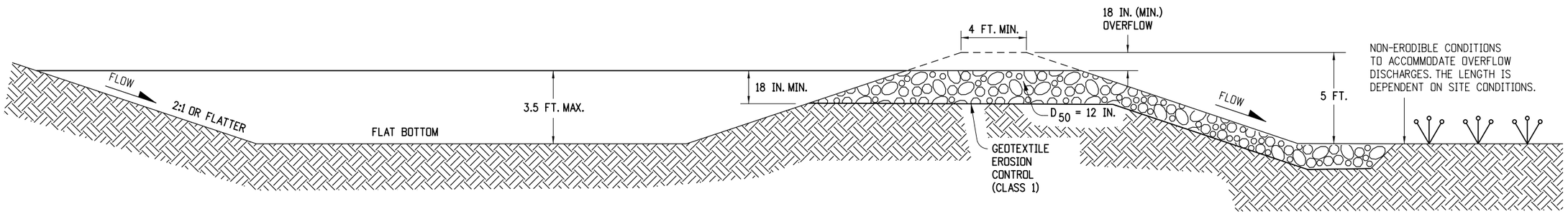

SECTION A-A

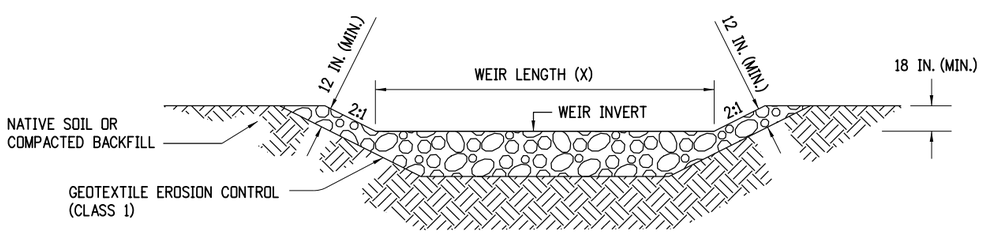

SECTION B-B

DRAINAGE AREA (ACRES)	WEIR LENGTH (FEET)
1	4
2	6
3	8
4	10
5	12

WEIR LENGTH TABLE

SEDIMENT TRAP

Computer File Information		Sheet Revisions	
Creation Date: 07/31/19		Date:	Comments
Designer Initials: DK	(R-X)	05/16/24	Revised General Note 9.
Last Modification Date: 05/16/24	(R-X)		
Detailer Initials: LTA	(R-X)		
CAD Ver.: MicroStation V8 Scale: Not to Scale Units: English	(R-X)		

Colorado Department of Transportation
2829 West Howard Place
CDOT HQ, 3rd Floor
Denver, CO 80204
Phone: 303-757-9021 FAX: 303-757-9868
Construction Engineering Services DK

TEMPORARY EROSION CONTROL

Issued by the Project Development Branch: July 31, 2019

STANDARD PLAN NO.
M-208-1
Standard Sheet No. 9 of 11
Project Sheet Number:

NOTES

1. STAKES SHALL BE WOOD AND SHALL BE 2 IN. X 2 IN. X 30 IN. NOMINAL.
2. EROSION BALES SHALL BE 18 IN. X 18 IN. X 36 IN.
3. EROSION BALES SHALL BE ENTRENCHED 4 IN. MINIMUM INTO THE SOIL, THIGHTLY ABUTTED WITH NO GAPS, STAKED, AND BACKFILLED AROUND THE ENTIRE OUTSIDE PERIMETER.
4. EROSION BALES CANNOT BE USED FOR CHECK DAMS.
5. EROSION BALE FILTER SHALL BE LOWER THAN BERM ELEVATION OR USED IN A SUMP CONDITION.
6. THE PAY ITEM NUMBER FOR EROSION BALES (WEED FREE) (EA) IS 208-00011.

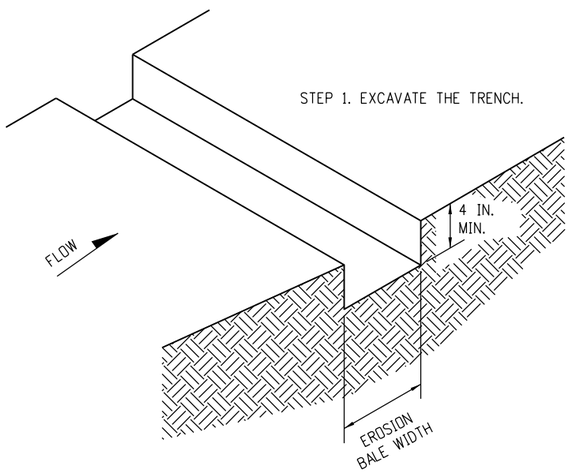

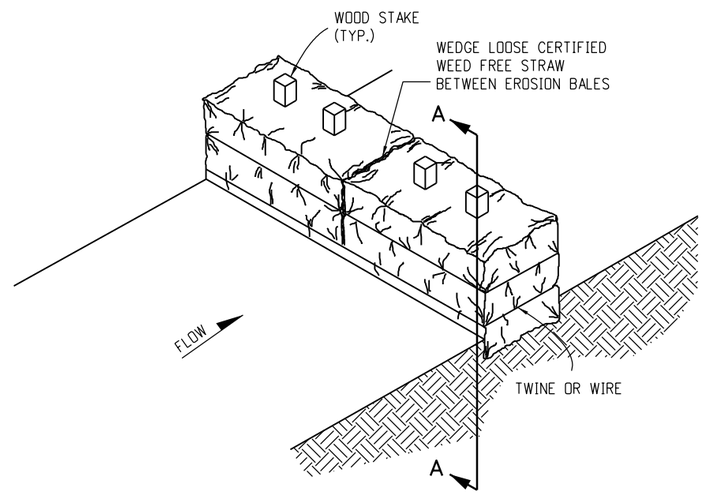

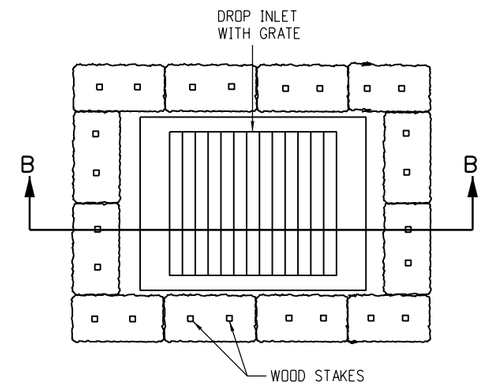

PLAN VIEW

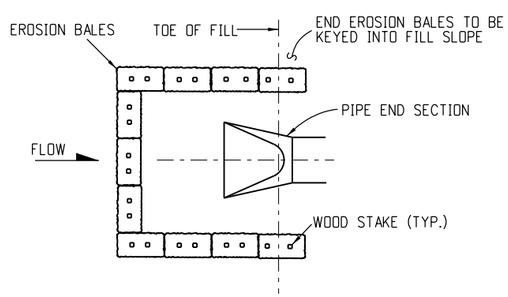

PLAN VIEW

EROSION BALE CULVERT INLET PROTECTION

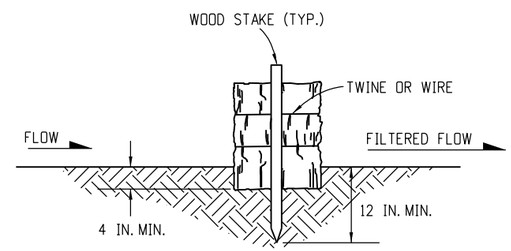

SECTION A-A

EROSION BALE TRENCHING AND STAKING

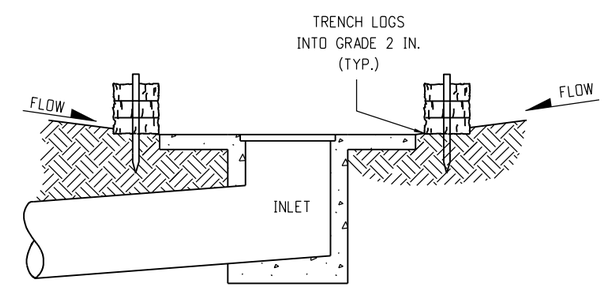

SECTION B-B

NOTE: LOCATE EROSION BALES AT THE OUTSIDE EDGE OF THE CONCRETE APRON.

EROSION LOG FILTER AT DROP INLET

EROSION BALE APPLICATIONS

Computer File Information		Sheet Revisions	
Creation Date: 07/31/19		Date:	Comments
Designer Initials: DK	(R-X)		
Last Modification Date: 05/16/24	(R-X)		
Detailer Initials: LTA	(R-X)		
CAD Ver.: MicroStation V8 Scale: Not to Scale Units: English	(R-X)		

Colorado Department of Transportation
2829 West Howard Place
CDOT HQ, 3rd Floor
Denver, CO 80204
Phone: 303-757-9021 FAX: 303-757-9868
Construction Engineering Services DK

TEMPORARY EROSION CONTROL

Issued by the Project Development Branch: July 31, 2019

STANDARD PLAN NO.
M-208-1
Standard Sheet No. 10 of 11
Project Sheet Number:

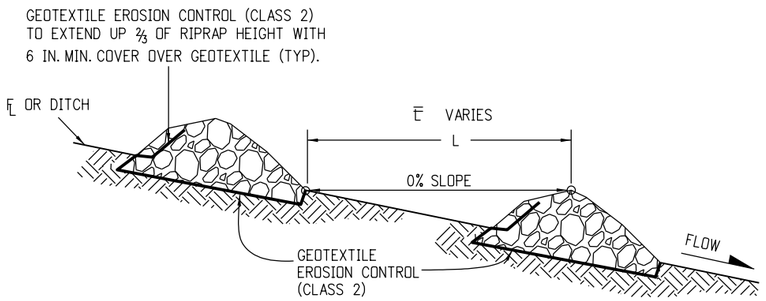

SECTION VIEW ALONG DITCH FLOWLINE

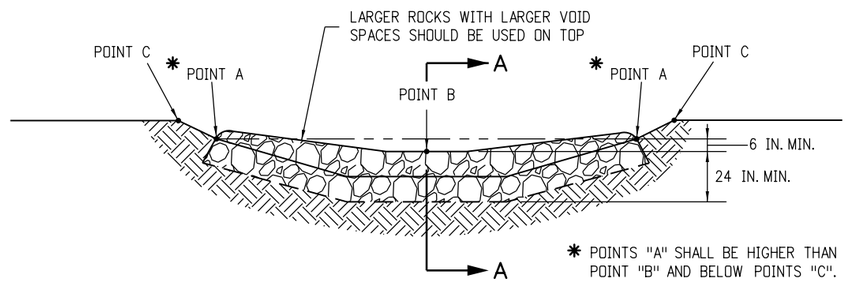

TYPICAL SECTION VIEW

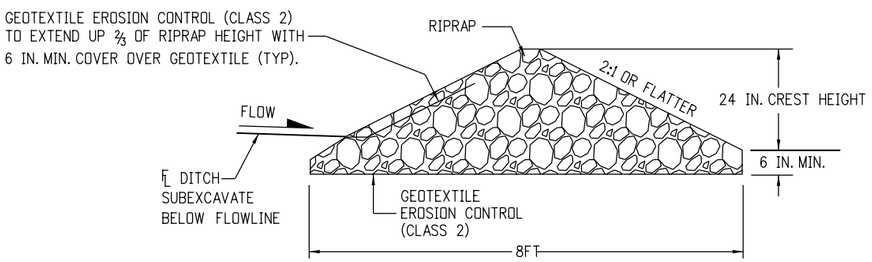

SECTION A-A

NOTES:

1. RIPRAP SIZE D_{50} = 6IN OR AS SHOWN ON THE PLANS.
2. THE GEOTEXTILE EROSION CONTROL SHALL BE CLASS 2 AND CONFORM TO THE REQUIREMENTS OF SUBSECTION 712.08.
3. THE ENDS OF RIPRAP CHECK DAM SHALL BE A MINIMUM OF 6 IN. HIGHER THAN CENTER OF CHECK DAM.
4. FOR USE AS TEMPORARY CHECK DAMS ONLY AND NOT FOR PERMANENT INSTALLATIONS.
5. THE PAY ITEM NUMBER FOR ROCK CHECK DAM (EA) IS 208-00041.

NOTE: ALL MATERIALS AND LABOR TO COMPLETE THE ROCK CHECK DAM SHALL BE INCLUDED IN THE COST OF WORK.

ROCK CHECK DAM

Computer File Information		Sheet Revisions	
Creation Date: 07/31/19		Date:	Comments
Designer Initials: DK	(R-X)		
Last Modification Date: 05/16/24	(R-X)		
Detailer Initials: LTA	(R-X)		
CAD Ver.: MicroStation V8 Scale: Not to Scale Units: English	(R-X)		

Colorado Department of Transportation
2829 West Howard Place
CDOT HQ, 3rd Floor
Denver, CO 80204
Phone: 303-757-9021 FAX: 303-757-9868
Construction Engineering Services DK

TEMPORARY EROSION CONTROL

Issued by the Project Development Branch: July 31, 2019

STANDARD PLAN NO.
M-208-1
Standard Sheet No. 11 of 11
Project Sheet Number:

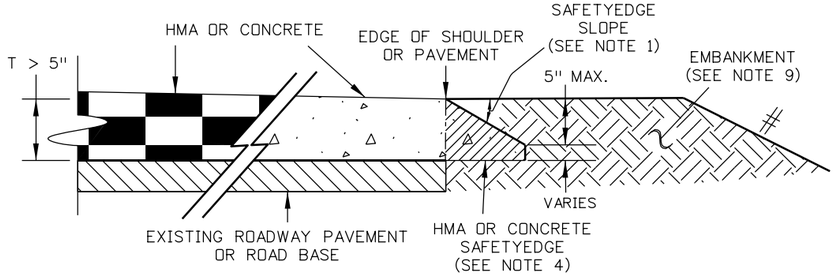

SAFETYEDGE DETAIL FOR HOT MIX ASPHALT OR CONCRETE RESURFACING GREATER THAN 5 INCHES

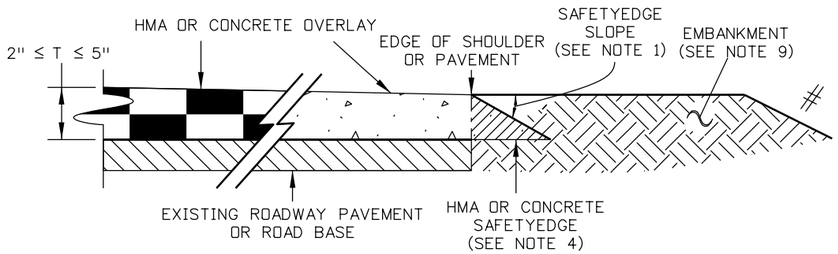

SAFETYEDGE DETAIL FOR HOT MIX ASPHALT OR CONCRETE RESURFACING LESS THAN OR EQUAL TO 5 INCHES

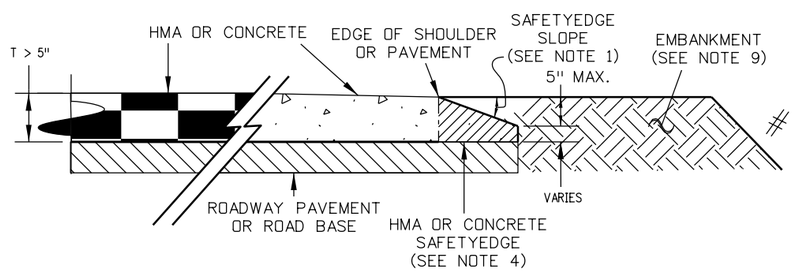

SAFETYEDGE DETAIL FOR NEW CONSTRUCTION, WIDENING, AND RECONSTRUCTION GREATER THAN 5 INCHES

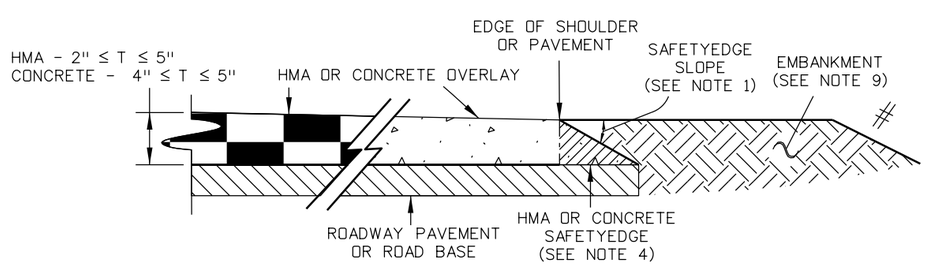

SAFETYEDGE DETAIL FOR NEW CONSTRUCTION, WIDENING, AND RECONSTRUCTION LESS THAN OR EQUAL TO 5 INCHES

T - TOTAL THICKNESS OF PAVEMENT

- SEE APPROPRIATE TYPICAL SECTION DETAIL IN PLANS FOR ROADSIDE DETAILS

SAFETY EDGE

GENERAL NOTES

1. THE SAFETYEDGE SHALL HAVE A SLOPE OF 32° (1V:1.6H) RELATIVE TO THE PAVEMENT CROSS SLOPE WITH AN ACCEPTABLE RISE TO RUN RANGE BETWEEN 27° (1V:1.9H) AND 37° (1V:1.3H).
2. CONSTRUCTION OF THE SAFETYEDGE SHALL NOT RESULT IN A DECREASE OF PAVED SHOULDER OR LANE WIDTH FOR NEW CONSTRUCTION, WIDENING, RECONSTRUCTION, OR RESURFACING GREATER THAN 3 INCHES IN DEPTH. RESURFACING 3 INCHES OR LESS IN-DEPTH MAY RESULT IN A DECREASE IN PAVED SHOULDER OR LANE WIDTH DURING CONSTRUCTION OF THE SAFETY EDGE. SEE APPROPRIATE TYPICAL SECTIONS DETAILS IN THE PLANS.
3. THE SAFETYEDGE SHALL BE CONSTRUCTED MONOLITHICALLY WITH THE ADJACENT LANE OR SHOULDER, AND SHAPED AND COMPACTED WITH A DEVICE ATTACHED TO THE PAVER. THE DEVICE MUST PRODUCE A UNIFORM SURFACE TEXTURE WITHOUT TEARING, SHOVING, OR GOUGING, AND MUST NOT LEAVE MARKS SUCH AS RIDGES AND INDENTATIONS. THE DEVICE MUST BE CAPABLE OF TRANSITION TO CROSSROADS, DRIVEWAYS, AND OBSTRUCTIONS.
4. THE EDGE OF THE ROADWAY, WHERE THE SAFETYEDGE TREATMENT IS TO BE PLACED, MUST HAVE A SOLID BASE, FREE OF DEBRIS SUCH AS: LOOSE MATERIAL, GRASS, WEEDS, OR MUD. GRADE AREAS ON WHICH THE SAFETYEDGE IS TO BE PLACED AS REQUIRED.
5. IN AREAS THAT DO NOT REQUIRE THE SAFETYEDGE, IT IS ACCEPTABLE TO SAW CUT AND REMOVE THE SAFETYEDGE AFTER PAVING OPERATIONS ARE COMPLETED OR TO CONSTRUCT A FORMED "BOX-OUT" TO PREVENT PLACEMENT DURING PAVING.
6. IN LOCATIONS WHERE A TRANSITION FROM A SAFETYEDGE SECTION TO A NON-SAFETYEDGE SECTION EXISTS, A TRANSITION SHALL BE CONSTRUCTED TO AVOID A VERTICAL EDGE PERPENDICULAR TO TRAFFIC. TRANSITIONS SHALL BE INCLUDED IN THE COST OF THE SAFETYEDGE WORK.
7. WITH THE APPROVAL OF THE ENGINEER, IN AREAS WHERE IT IS NOT POSSIBLE TO PLACE THE SAFETYEDGE IN CONJUNCTION WITH MAINLINE PAVING OPERATIONS, SHORT SECTIONS OF HANDWORK SHALL BE ALLOWED WHEN NECESSARY FOR TRANSITIONS AND TURNOUTS.
8. SITE PREPARATION AND ADDITIONAL EARTHWORK REQUIRED TO CONSTRUCT THE SAFETYEDGE WILL BE PAID AS EQUIPMENT HOURS AND EMBANKMENT OR SHOULDER MATERIALS.
9. AFTER THE SAFETYEDGE HAS BEEN PLACED, THE SHOULDER OR EMBANKMENT MATERIAL SHALL BE GRADED BACK FLUSH WITH THE PAVED LANE OR SHOULDER FACE.
10. THE SAFETYEDGE SHALL NOT BE USED WHERE THE FORESLOPE/EMBANKMENT OR THE GROUND SURFACE HAS A STEEPER SLOPE THAN THE SLOPE OF THE SAFETYEDGE.
11. THE SAFETYEDGE SHALL BE CONSTRUCTED ALONG ALL EDGES OF ROADWAY, EXCEPT AT AREAS WITH CURB AND GUTTER, AREAS WITH GUARDRAIL IMMEDIATELY ADJACENT TO THE EDGE OF THE ROADWAY, AT THE INTERSECTION OF CROSSROADS WHERE A VERTICAL EDGE IS REQUIRED, OR AREAS NOTED IN THE PLANS.

ADDITIONAL QUANTITIES REQUIRED FOR SAFETYEDGE*

CASE	PAVEMENT THICKNESS	HMA TONS**/SIDE/LF	HMA TONS**/SIDE/MILE	CONCRETE CY/SIDE/LF	CONCRETE CY/SIDE/MILE
T<=5"	2"	0.002	9.3	NA	NA
	3"	0.004	20.9	NA	NA
	4"	0.007	37.2	0.003	17.0
	5"	0.011	58.2	0.005	29.7
T>5"	6"	0.015	81.4	0.008	41.6
	7"	0.020	104.7	0.010	53.5
	8"	0.024	127.9	0.012	65.4
	9"	0.029	151.2	0.015	77.2
	10"	0.033	174.5	0.017	89.1
	11"	0.037	197.7	0.019	101.0
	12"	0.042	221.0	0.021	112.9
	13"	0.046	244.2	0.024	124.8
	14"	0.051	267.5	0.026	136.7
	15"	0.055	290.8	0.028	148.5
	16"	0.059	314.0	0.030	160.4

* FOR INFORMATION ONLY. ** ASSUME HMA DENSITY IS EQUAL TO 145 LBS PER CUBIC FOOT.

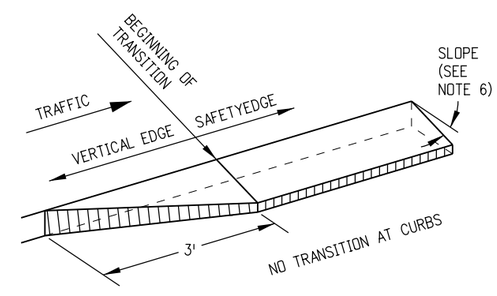

TRANSITION DETAIL FOR CONCRETE ONLY

Computer File Information	
Creation Date: 07/31/19	
Designer Initials: DLK	(R-X)
Last Modification Date: 04/25/25	(R-X)
Detailer Initials: LTA	(R-X)
CAD Ver.: MicroStation V8 Scale: Not to Scale Units: English	(R-X)

Sheet Revisions	
Date:	Comments
12/12/24	New M Standard Plan Sheet.
04/25/25	Revised the details and General Notes.

Colorado Department of Transportation
2829 West Howard Place
CDOT HQ, 3rd Floor
Denver, CO 80204
Phone: 303-757-9021 FAX: 303-757-9868
Construction Engineering Services DLK

SAFETYEDGE FOR PAVEMENT

Issued by the Project Development Branch: July 31, 2019

STANDARD PLAN NO.
M-400-1
Standard Sheet No. 1 of 1
Project Sheet Number:

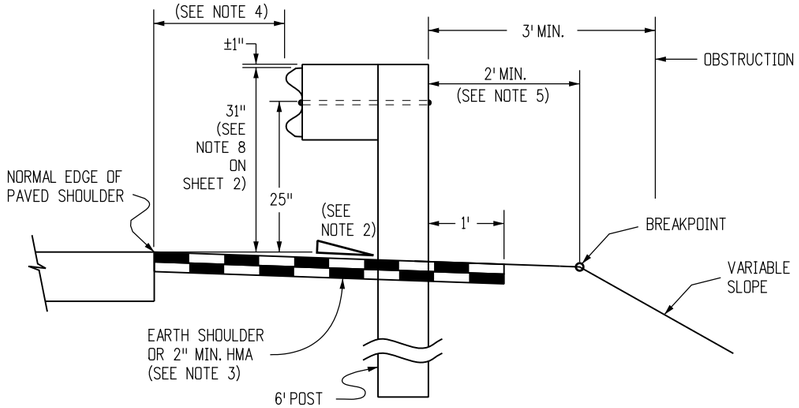

NORMAL ROADSIDE INSTALLATION
WHEN FILL REQUIRES GUARDRAIL

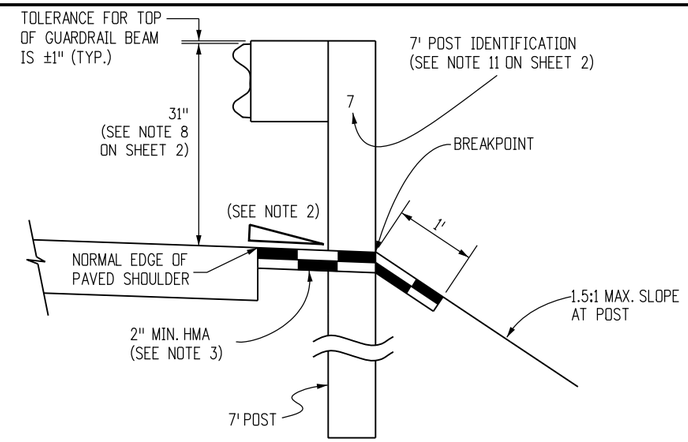

RESTRICTIVE ROADSIDE INSTALLATION
WITH 7 FOOT GUARDRAIL POSTS
(SEE NOTE 5)

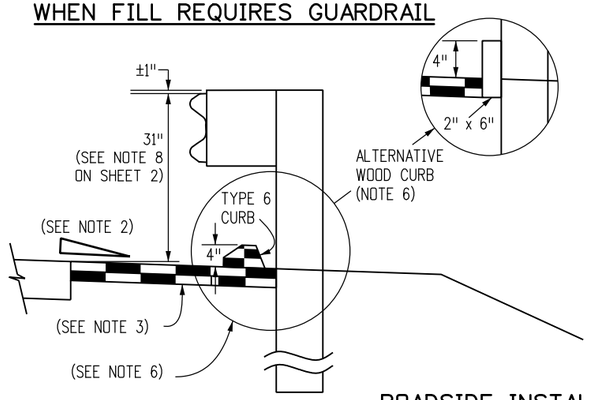

OPTION A

ROADSIDE INSTALLATION
WITH EROSION CONTROL CURB

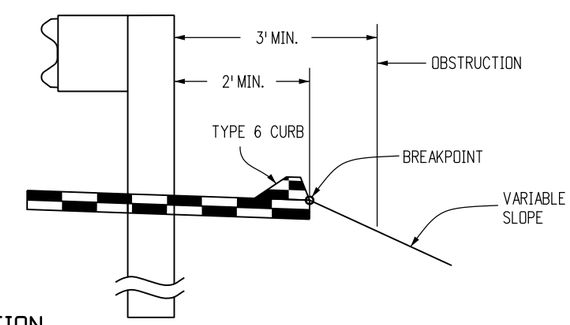

OPTION B (PREFERRED)

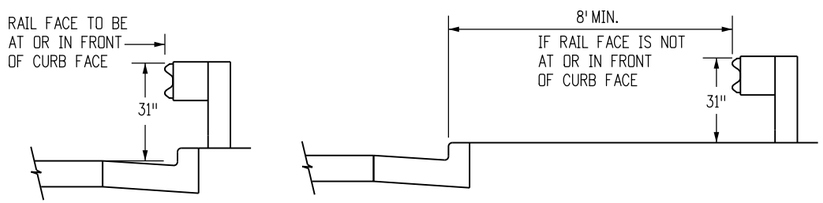

INSTALLATION WITH CURB AND GUTTER

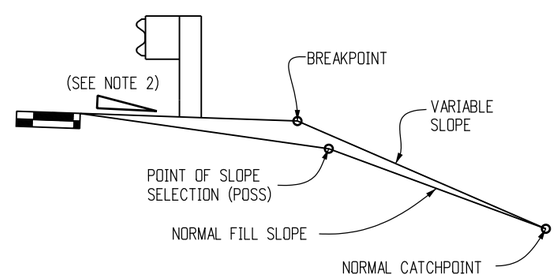

EMBANKMENT WITH GUARDRAIL

(NOTE: THE CATCHPOINT REMAINS THE SAME AS THAT FOR "NORMAL" FILL SLOPE. FOR THE WIDER "Z" DISTANCES, THE VARIABLE SLOPE MAY "CATCH" AT THE POSS.)

LOCATION	SPACING
ALL LOCATIONS EXCEPT BRIDGE RAIL LOCATIONS	6'-3"
BRIDGE OR STRUCTURE APPROACH	SEE SHEETS 11 & 19

NORMAL CENTER-TO-CENTER POST SPACING

COLORADO LICENSED
JOSHUA J. PALMER
50188
03/23/20
PROFESSIONAL ENGINEER

GENERAL NOTES

(CONTINUE ON SHEET 2)

1. ALL GUARDRAILS SHOWN ARE MASH 2016 TL-3 COMPLIANT.
2. RATE OF SLOPE DEPENDS ON GUARDRAIL LOCATION:
   A. FOR GUARDRAIL FACE 2 FT. OR LESS FROM THE NORMAL EDGE OF PAVED SHOULDER, CONTINUE THE RATE OF SLOPE OF THE NORMAL PAVED SHOULDER TO THE BREAKPOINT.
   B. FOR GUARDRAIL FACE MORE THAN 2 FT. FROM THE NORMAL EDGE OF THE PAVED SHOULDER, THE SLOPE SHALL BE 10:1 OR FLATTER.
3. WHEN SPECIFIED ON THE PLANS, EXTEND A 2 IN. MINIMUM THICKNESS PAVED SURFACE TO 1 FT. BEHIND THE GUARDRAIL POSTS OR TO THE EROSION CONTROL CURB AS SHOWN ON PLANS. ASPHALT CUTTING & PATCHING OR OTHER APPROVED METHOD SHALL BE USED TO MINIMIZE DAMAGE TO ALL PAVED SURFACES UNDER GUARDRAIL INSTALLATIONS. ALL REPAIRS TO THE PAVED AREA WILL NOT BE MEASURED AND PAID FOR SEPARATELY BUT SHALL BE INCLUDED IN THE COST OF THE WORK. A MINIMUM 3 IN. THICK FIBER REINFORCED CONCRETE PAVEMENT MAY ALSO BE USED FOR PAVING BENEATH THE GUARDRAIL. INSTALL THE POST IN A ½ IN. OVERSIZED FORMED HOLE FOR GUARDRAIL RUNS AND TERMINALS AS DIRECTED. PAYMENT FOR THIS PAVED SURFACE WILL BE MADE UNDER A PAVEMENT OR CONCRETE PAY ITEM WITH QUANTITIES SHOWN ON THE PLANS.
4. THE MINIMUM GUARDRAIL OFFSET FROM PAVED SHOULDER EDGE SHALL BE:
   0 FT. FOR SHOULDERS 8 FT. OR WIDER
   2 FT. FOR SHOULDERS 6 FT. OR LESS

   THE GUARDRAIL OFFSET FROM PAVED INSIDE SHOULDER EDGE OF A DIVIDED HIGHWAY SHALL BE;
   0 FT. MINIMUM FOR SHOULDERS 6 FT. OR WIDER
   2 FT. DESIRABLE FOR 4 FT. SHOULDERS

   THE ABOVE 2 FT. GUARDRAIL TO SHOULDER OFFSET IS DESIRABLE BUT NOT REQUIRED FOR:
   A. FOR AN EXISTING HIGHWAY WITH A DESIGN SPEED LESS THAN 50 MPH, THE MINIMUM OFFSET IS 4 FT. FROM THE TRAVELED WAY.
   B. FOR A ONE-WAY ONE-LANE RAMP, AND WHERE ONE OR MORE OF THE FOLLOWING ARE TRUE:
      (1) THE NON-OFFSET GUARDRAIL BEGINS AT LEAST 100 FT. BEYOND RAMP NOSE.
      (2) THE NON-OFFSET GUARDRAIL IS NOT LOCATED ON THE RAMP EXIT OR ENTRANCE CURVE CONNECTION TO THE MAJOR HIGHWAY.
      (3) THE RAMP SHOULDERS ARE 4 FT. OR WIDER.

   USE OF GREATER THAN MINIMUM OFFSET DIMENSIONS IS ENCOURAGED TO MEET THE DESIRABLE GOAL OF PLACING THE GUARDRAIL AS FAR AS POSSIBLE FROM THE TRAVEL WAY, EVEN FOR SHORT DISTANCES, WHILE PROVIDING A SMOOTH CHANGE IN GUARDRAIL ALIGNMENT.
5. IF 2 FT. CANNOT BE PROVIDED BETWEEN THE BACK OF THE GUARDRAIL POST AND THE BREAKPOINT, USE 7 FT. GUARDRAIL POSTS. REFER TO THE "RESTRICTIVE ROADSIDE INSTALLATION" DETAIL.
6. WHEN SPECIFIED ON THE PLANS, INSTALL 4 IN. HIGH TYPE 6 CURB WITH ITS FACE AT OR BEHIND THE RAIL FACE. AS AN ALTERNATIVE WHEN SPECIFIED ON THE PLANS, INSTALL A 2 IN. x 6 IN. TREATED (AASHTO M 133) WOOD CURB. FASTEN WITH A 4 IN. LAG BOLT AND WASHER AT EACH WOOD POST, OR WITH A 1#4 IN. DIA. BOLT WITH WASHER AND NUT AT EACH STEEL POST. IF THE 2 IN. x 6 IN. WOOD CURB IS SPECIFIED, IT WILL BE INCLUDED IN THE COST OF THE GUARDRAIL. IF APPROVED BY THE ENGINEER, A 2 IN. x 4 IN. TREATED WOOD CURB MAY BE SUBSTITUTED FOR THE 2 IN. x 6 IN. CURB AND SET ON TOP OF PAVEMENT SURFACE AND ATTACHED AS DESCRIBED ABOVE. NO SPLICING SHALL BE ALLOWED IN WOOD CURBS. ADJACENT BOARDS SHALL BE BUTTED TOGETHER AND BOLTED AT A POST LOCATION. JOINTS SHALL BE LOCATED AT THE POSTS.

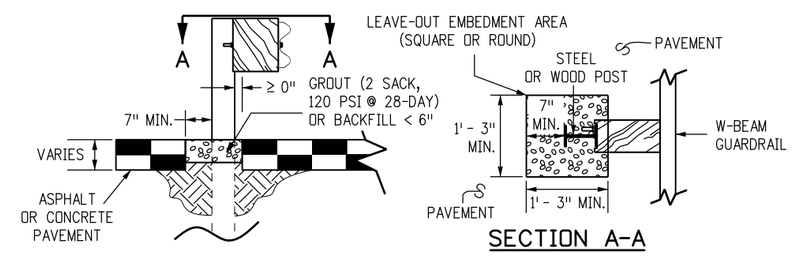

SECTION A-A

LEAVE-OUT AREA FOR GUARDRAIL POSTS LOCATED IN PAVEMENT

NOTE: LEAVE-OUT AREAS SHALL BE PROVIDED FOR ALL GUARDRAIL POSTS LOCATED IN PAVEMENT TO ALLOW THE POSTS TO ROTATE IN THEIR EMBEDMENT SUCH THAT VEHICLE IMPACT LOADS ARE DISTRIBUTED THROUGH THE POST INTO THE EMBEDMENT MATERIAL PRIOR TO THE POSTS BREAKING PREMATURELY.

Computer File Information	
Creation Date: 07/31/19	
Designer Initials: JBK	R-X
Last Modification Date: 03/05/20	R-X
Detailer Initials: LTA	R-X
CAD Ver.: MicroStation V8 Scale: Not to Scale Units: English	R-X

Sheet Revisions	
Date:	Comments
03/05/20	Revised Gen. Note 1 to show MASH compliant.

Colorado Department of Transportation
2829 West Howard Place
CDOT HQ, 3rd Floor
Denver, CO 80204
Phone: 303-757-9021 FAX: 303-757-9868
Project Development Branch JBK

MIDWEST
GUARDRAIL SYSTEM (MGS)
TYPE 3 W-BEAM 31 INCHES

Issued by the Project Development Branch: July 31, 2019

STANDARD PLAN NO.
M-606-1
Standard Sheet No. 1 of 19
Project Sheet Number:

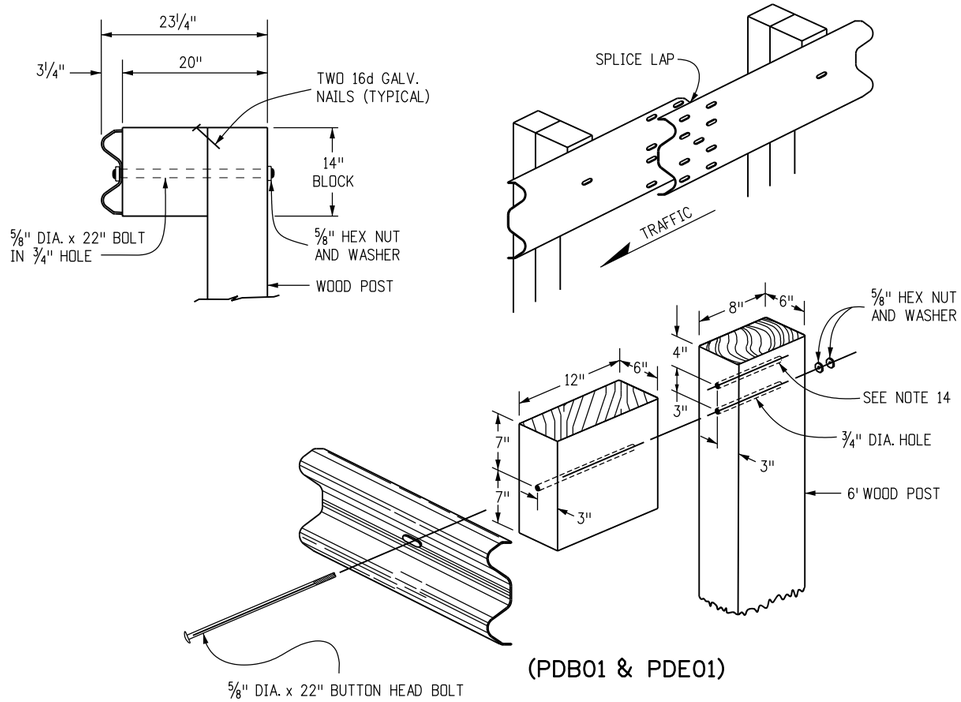

(PDB01 & PDE01)

WOOD POST & BLOCK

(NOMINAL DIMENSIONS ARE SHOWN FOR THE POSTS & BLOCKS)

COLORADO LICENSED
JOSHUA J. PALMER
50188
03/23/20
PROFESSIONAL ENGINEER

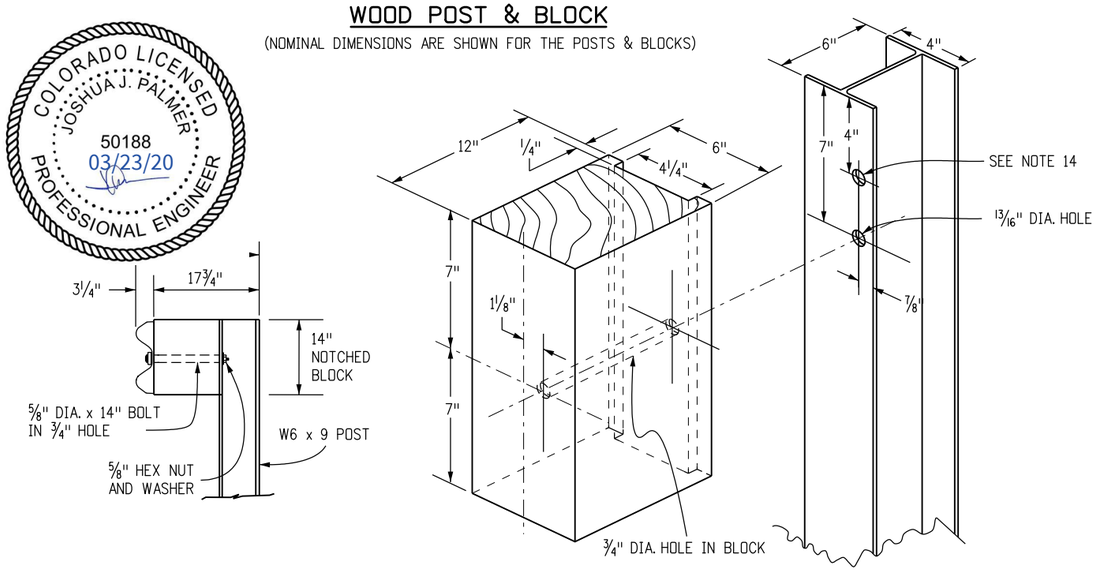

STEEL POST & NOTCHED BLOCK

(NOMINAL DIMENSIONS ARE SHOWN FOR THE POSTS & BLOCKS)

(PWE01)

GENERAL NOTES (CONTINUED FROM SHEET 1)

7. SEE SHEETS 7 AND 9 FOR CURB TREATMENTS AT GUARDRAIL TERMINALS.
8. IF THIS DIMENSION WILL BE LESS THAN 28 INCHES, RESET GUARDRAIL HEIGHT TO 28 INCHES OR ABOVE.
9. ALL W-BEAM SPLICES, AND SPLICES OF TERMINAL CONNECTORS TO W-BEAM SHALL BE LAPPED IN THE DIRECTION OF TRAFFIC UNLESS OTHERWISE NOTED IN THE PLANS OR BY THE MANUFACTURER.
10. MATERIAL TYPE AND SHAPE OF POSTS AND BLOCKS SHALL BE THE SAME THROUGHOUT THE PROJECT EXCEPT WHEN SPECIFIC POSTS AND BLOCKS ARE SPECIFIED, i.e. AT END ANCHORAGES AND BOX CULVERTS.
11. WHEN SPECIFIED IN THE CONTRACT, 7 FT. POSTS SHALL BE INSTALLED INSTEAD OF THE STANDARD 6 FT. POSTS. THE 7 FT. POSTS SHALL BE MARKED WITH THE NUMBER 7 TO ENSURE PERMANENT INDENTIFICATION. STEEL POSTS SHALL BE STAMPED PRIOR TO GALVANIZING. THE NUMBER 7 SHALL BE A MINIMUM 2 IN. TALL AND LOCATED AS SHOWN ON THE ELEVATION VIEW ON SHEET 1.
12. THE STANDARD 3 IN. X 1¾ IN. X 3⁄16 IN. RECTANGULAR WASHER USED UNDER POST BOLT HEADS IN THE PAST MAY REMAIN IN EXISTING INSTALLATIONS BUT SHALL NOT BE USED IN NEW CONSTRUCTION, REPAIRS, OR RESETTING OF RAIL, EXCEPT WHEN SPECIFICALLY IDENTIFIED ON THE STANDARD PLAN.
13. STANDARD GALVANIZED ROUND STEEL WASHERS SHALL BE USED UNDER ALL NUTS IN CONTACT WITH WOOD POSTS.
14. AN ADDITIONAL HOLE SHALL BE PROVIDED IN THE POSTS TO FACILITATE FUTURE RAISING OF THE RAIL ELEMENTS AND BLOCKS FOR OVERLAYS. POSTS PROVIDED MAY ALSO HAVE ADDITIONAL HOLES (UP TO 4 PER FLANGE) FOR MEDIAN GUARDRAIL APPLICATION.
15. RETROREFLECTOR TABS SHALL BE INSTALLED AT 25 FT. INTERVALS (SEE SHEETS 6 AND 8 FOR EXCEPTIONS). RETROREFLECTOR TABS WILL NOT BE PAID FOR SEPARATELY BUT SHALL BE INCLUDED IN THE WORK. THE TABS SHALL BE INSTALLED ON SPLICE BOLTS, NOT ON POST BOLTS AND SHALL BE MOUNTED SO THE BOLT SLOT FACES AWAY FROM TRAFFIC, AND THE RETROREFLECTOR SURFACE FACES THE APPROACHING TRAFFIC FOR ONE-WAY ROADS. FOR TWO-WAY ROADS, BOTH SIDES OF THE TABS SHALL BE RETROREFLECTIVE, SO THAT DELINEATION IS PROVIDED FOR BOTH DIRECTIONS OF TRAVEL. THE RETROREFLECTIVE SHEETING COLOR SHALL MATCH THE COLOR OF THE ADJACENT TRAVEL WAY EDGE LINE. SEE THE RETROREFLECTOR TAB DETAIL ON SHEET 3.
16. AT THE TIME OF INSTALLATION, WOOD POSTS OR BLOCKS WITH SEASONING CHECKS GREATER THAN ¼ IN. SHALL NOT BE USED WHEN THE CHECK EXTENDS THE FULL LENGTH OF THE PIECE.
17. WOOD BLOCKS SHALL BE CUT FROM THE SAME CROSS-SECTION, SPECIES, AND GRADE, AND SHALL RECEIVE THE SAME PRESERVATIVE TREATMENT AS THE POSTS WHEN WOOD POSTS ARE USED.
18. REFERENCES SUCH AS 00PDB01", 00PDE01", AND 00PWE01" IN THIS STANDARD PLAN SPECIFY HARDWARE DETAILS FROM 00A GUIDE TO STANDARDIZED HIGHWAY BARRIER HARDWARE" PREPARED BY THE AASHTO-AGC-ARTBA JOINT COOPERATIVE COMMITTEE.
19. RAIL BLOCKS MANUFACTURED FROM SYNTHETIC MATERIAL WILL BE ACCEPTED AS ALTERNATIVES TO WOOD BLOCKS FOR USE WITH STEEL POSTS PROVIDED THAT THE BLOCKS HAVE RECEIVED FHWA APPROVAL.
20. WOOD POSTS SHALL BE MADE OF TIMBER WITH AN EXTREME FIBER STRESS IN BENDING OF 1200 PSI STRESS GRADING AND POST DIMENSIONS SHALL CONFORM WITH THE RULES OF THE WEST COAST INSPECTION BUREAU, OR THE SOUTHERN PINE BUREAU, OR THE WESTERN WOOD PRODUCTS ASSOCIATION. TIMBER FOR POSTS SHALL BE EITHER ROUGH SAWN (UNPLANED) OR S4S (SURFACED FOUR SIDES) WITH NOMINAL DIMENSIONS INDICATED. ONLY ONE TYPE OF SURFACE FINISH SHALL BE USED FOR POSTS AND BLOCKS IN ANY ONE CONTINUOUS LENGTH OF GUARDRAIL.
21. GLULAM POSTS AND BLOCKS WILL BE ACCEPTED AS ALTERNATIVES PROVIDED THAT THE SUPPLIED MATERIALS HAVE RECEIVED FHWA APPROVAL AND ARE CERTIFIED AS IDENTICAL TO THE SPECIMENS USED FOR TESTING AND APPROVAL.
22. PRESSURE TREATMENT OF POSTS AND BLOCKS SHALL CONFORM TO AASHTO M 133 EXCEPT THAT BLOCKS NEED NOT BE INCISED. PRESERVATION ASSAY RETENTION REPORTS SHALL BE SUBMITTED TO THE ENGINEER. THE CONTRACTOR SHALL CERTIFY THAT THE SPECIES AND GRADE MEET THE REQUIREMENTS OF THE CONTRACT.
23. W-BEAM AND THRIE-BEAM GUARDRAIL POSTS SHALL BE MANUFACTURED USING AASHTO M 270 (ASTM A 709) GRADE 36 STEEL UNLESS CORROSION RESISTANT STEEL IS REQUIRED, IN WHICH CASE THE POST SHALL BE MANUFACTURED FROM AASHTO M 270 (ASTM A 709) GRADE 50W STEEL. THE DIMENSIONS OF THE CROSS-SECTION SHALL CONFORM TO A W6 X 9 SECTION AS DEFINED IN AASHTO M 160 (ASTM A 6). W6 X 8.5 WIDE FLANGE STEEL POSTS ARE AN ACCEPTABLE ALTERNATIVE TO THE W6 X 9.
24. AFTER THE SECTION IS CUT AND ALL HOLES ARE DRILLED OR PUNCHED THE COMPONENT SHALL BE ZINC-COATED CONFORMING TO AASHTO M 111 (ASTM A 123) UNLESS CORROSION-RESISTANT STEEL IS USED. WHEN CORROSION-RESISTANT STEEL IS USED THE PORTION OF THE POST TO BE EMBEDDED IN SOIL SHALL BE ZINC-COATED CONFORMING TO AASHTO M 111 (ASTM A 123) AND THE PORTION ABOVE THE SOIL SHALL NOT BE ZINC-COATED, PAINTED OR OTHERWISE TREATED.
25. FIELD MODIFICATION TO RAIL ELEMENTS IS ALLOWED PER MANUFACTURER'S RECOMMENDATIONS, OR WITH THE APPROVAL OF THE STANDARDS AND SPECIFICATIONS UNIT. POSTS SHALL NOT BE MODIFIED. COMPONENTS ON WHICH THE SPELTER COATING HAS BEEN DAMAGED SHALL BE EITHER REGALVANIZED OR RECOATED IN CONFORMANCE WITH AASHTO M 36, OR PAINTED WITH ONE FULL BRUSH COAT OF ZINC RICH PAINT CONFORMING TO MILITARY SPECIFICATION DOD-P-21035A.

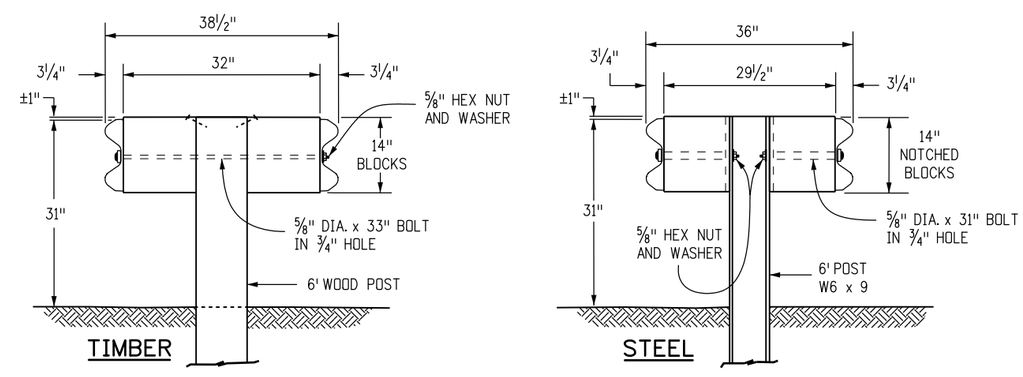

DOUBLE BLOCK AND GUARDRAIL TYPE 3 (DOUBLE) FOR MEDIAN BARRIER

Computer File Information		Sheet Revisions	
Creation Date: 07/31/19		Date:	Comments
Designer Initials: JBK	(R-X)		
Last Modification Date: 03/05/20	(R-X)		
Detailer Initials: LTA	(R-X)		
CAD Ver.: MicroStation V8 Scale: Not to Scale Units: English	(R-X)		

Colorado Department of Transportation
2829 West Howard Place
CDOT HQ, 3rd Floor
Denver, CO 80204
Phone: 303-757-9021 FAX: 303-757-9868
Project Development Branch JBK

MIDWEST GUARDRAIL SYSTEM (MGS) TYPE 3 W-BEAM 31 INCHES

Issued by the Project Development Branch: July 31, 2019

STANDARD PLAN NO.
M-606-1
Standard Sheet No. 2 of 19
Project Sheet Number:

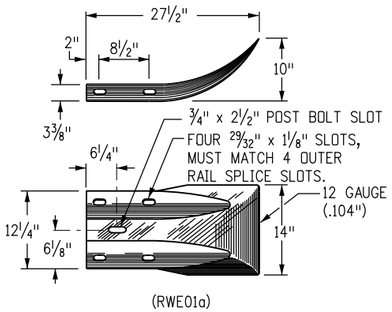

TERMINAL SECTION (FLARED)

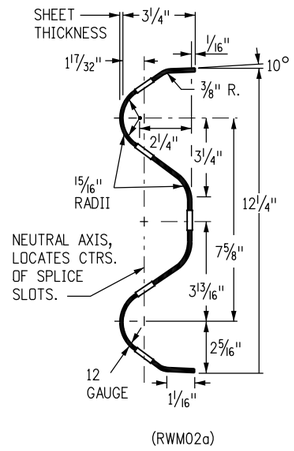

W-BEAM RAIL SECTION

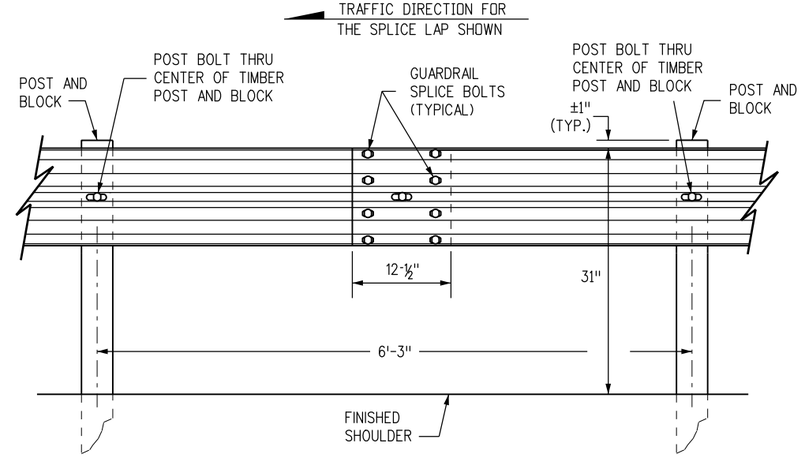

W-BEAM RAIL SPLICE

PART	MATERIAL SPEC.	GALVANIZING SPEC.	CORROSION-RESISTANT SPEC.
W-BEAM RAIL & TERMINAL SECTIONS	AASHTO M 180, CLASS A OR B	AASHTO M 180, TYPE 1 OR 2	AASHTO M 180, TYPE 4
BASE PLATE	ASTM A 36	AASHTO M 111	N.A.
NUTS, BOLTS & STUDS FOR GENERAL USE	ASTM A 307	AASHTO M 232, CLASS C OR ASTM B 695 CLASS 50 TYPE 1	
HIGH STRENGTH BOLTS & NUTS	ASTM A 325		
HIGH STRENGTH STUDS & NUTS	ASTM A 449		
ROUND STEEL WASHERS	ASTM F 436		
RECTANGULAR WASHERS	AASHTO M 180		
OTHER FITTINGS	ASTM A 36	AASHTO M 111	

THE TABULATION OF GUARDRAIL WILL SPECIFY THE TYPE OF CORROSION PROTECTION: GALVANIZED OR CORROSION - RESISTANT STEEL.

STEEL POSTS SHALL HAVE THE SAME CORROSION PROTECTION AS SPECIFIED FOR THE METAL BEAM RAIL. PUNCHING, DRILLING, CUTTING, OR WELDING OF POSTS WILL NOT BE PERMITTED AFTER GALVANIZING.

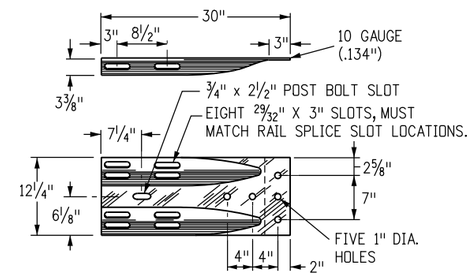

TERMINAL SECTION (CONNECTOR)

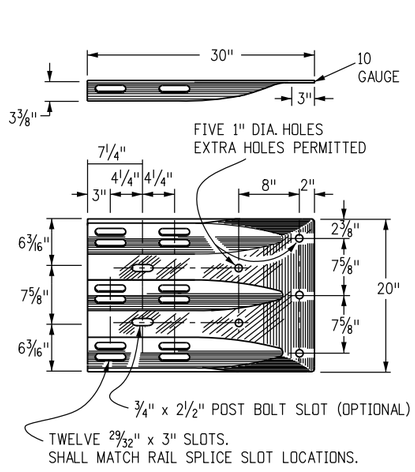

THRIE BEAM TERMINAL SECTION (CONNECTOR)

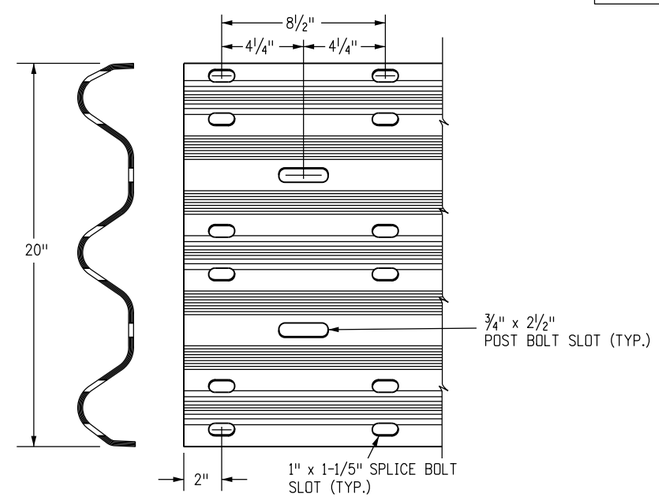

THRIE BEAM DETAIL

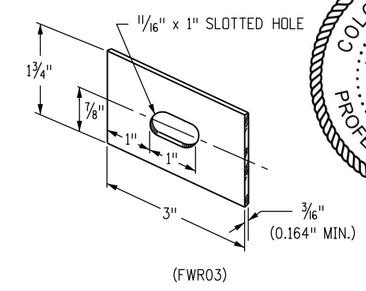

RECTANGULAR WASHER

(TO BE USED ONLY WHERE SPECIFIED.)

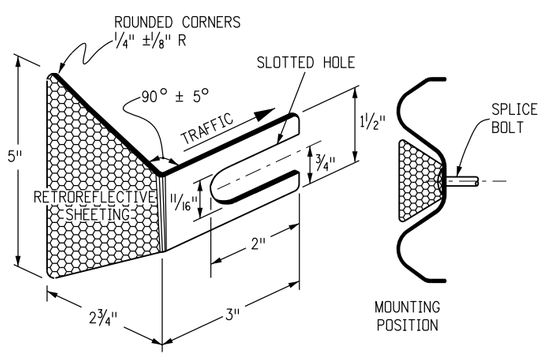

RETROREFLECTOR TAB

NOTE: RETROREFLECTOR TABS SHALL BE MANUFACTURED FROM 12 TO 14 GAUGE STEEL AND SHALL CONFORM TO THE REQUIREMENTS OF S STANDARD S-612-1.

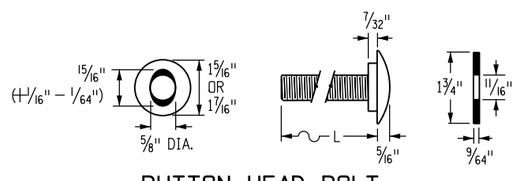

BUTTON HEAD BOLT WITH OVAL SHOULDER

WASHER

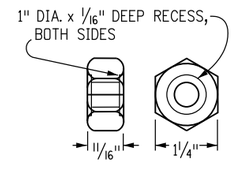

HEX NUT

DIAMETER & TYPE (INCHES)	12" BLOCKS L = LENGTH (INCHES)	THREAD LENGTH (INCHES)	INTENDED USE	AASHTO-AGC-ARTBA STANDARD NUMBER	NO. BOLTS, NUTS & WASHERS
⅝	1¼	FULL (1 1/32)	ALL RAIL SPLICES	FBB01	8 PER SPLICE*
BUTTONHEAD OVAL SHLDR.	22	MIN. 2½	SINGLE BLOCK & POST (TIMBER)	FBB04	1 PER POST
	33	MIN. 2	DOUBLE BLOCK & POST (TIMBER)	FBB05	1 PER POST
	14	MIN. 2	FASTEN NOTCHED BLOCK TO STEEL POST	FBB03	1 PER BLOCK
WASHERS NOT USED AT RAIL SPLICES					

COLORADO LICENSED
JOSHUA J. PALMER
50188
03/23/20
PROFESSIONAL ENGINEER

Computer File Information	
Creation Date: 07/31/19	
Designer Initials: JBK	(R-X)
Last Modification Date: 03/05/20	(R-X)
Detailer Initials: LTA	(R-X)
CAD Ver.: MicroStation V8 Scale: Not to Scale Units: English	(R-X)

Sheet Revisions	
Date:	Comments

Colorado Department of Transportation
2829 West Howard Place
CDOT HQ, 3rd Floor
Denver, CO 80204
Phone: 303-757-9021 FAX: 303-757-9868
Project Development Branch JBK

MIDWEST GUARDRAIL SYSTEM (MGS) TYPE 3 W-BEAM 31 INCHES

Issued by the Project Development Branch: July 31, 2019

STANDARD PLAN NO.
M-606-1
Standard Sheet No. 3 of 19
Project Sheet Number:

NOTES

1. THE MGS TRANSITION FROM A TYPE 3 GUARDRAIL SHALL BE COMPLETED OUTSIDE THE MGS END ANCHORAGE LIMITS.

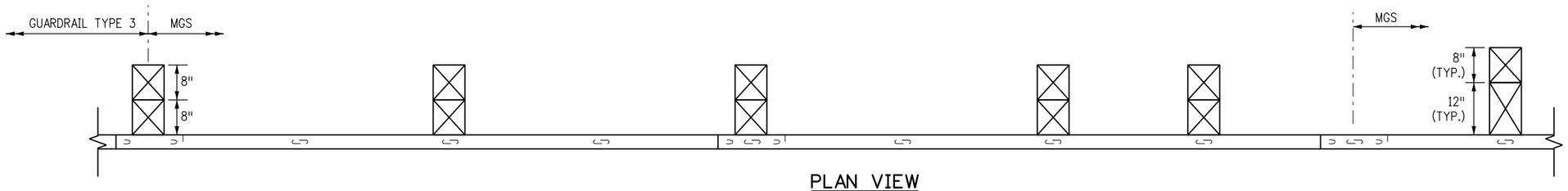

PLAN VIEW

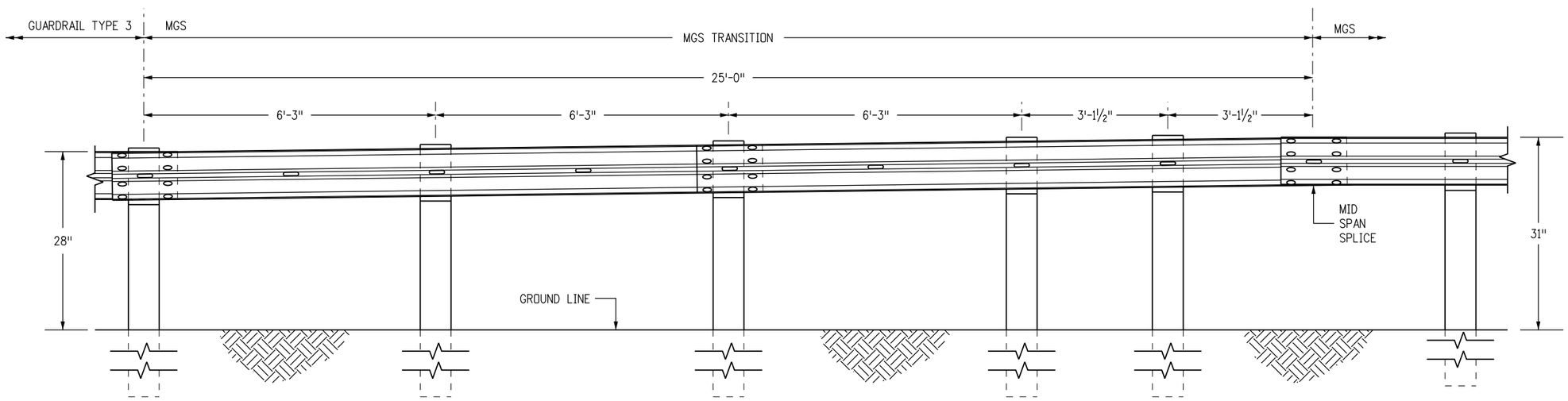

ELEVATION VIEW

TRANSITION FROM 28 INCH GUARDRAIL TO 31 INCH MGS

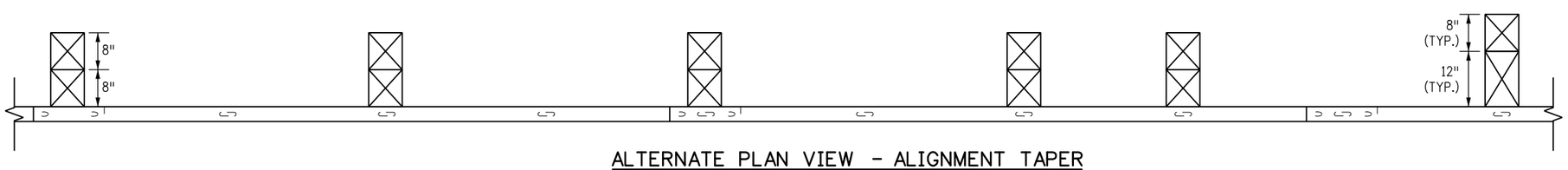

ALTERNATE PLAN VIEW - ALIGNMENT TAPER

COLORADO LICENSED
JOSHUA J. PALMER
50188
03/23/20
PROFESSIONAL ENGINEER

Computer File Information	
Creation Date: 07/31/19	
Designer Initials: JBK	(R-X)
Last Modification Date: 03/05/20	(R-X)
Detailer Initials: LTA	(R-X)
CAD Ver.: MicroStation V8 Scale: Not to Scale Units: English	(R-X)

Sheet Revisions	
Date:	Comments

Colorado Department of Transportation
2829 West Howard Place
CDOT HQ, 3rd Floor
Denver, CO 80204
Phone: 303-757-9021 FAX: 303-757-9868
Project Development Branch JBK

MIDWEST
GUARDRAIL SYSTEM (MGS)
TYPE 3 W-BEAM 31 INCHES

Issued by the Project Development Branch: July 31, 2019

STANDARD PLAN NO.
M-606-1
Standard Sheet No. 4 of 19
Project Sheet Number:

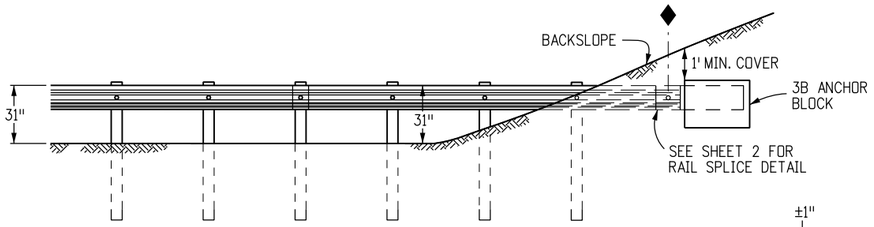

SEE TYPE 3B (RUB RAIL) PLAN VIEW FOR ALIGNMENT. THE 100 FT. FLARE LENGTH MAY BE SHORTENED IF THE SLOPE IS LESS THAN 8 FT. WIDE.

END ANCHORAGE TYPE 3B

(WITHOUT ROADSIDE DITCH AT GUARDRAIL)

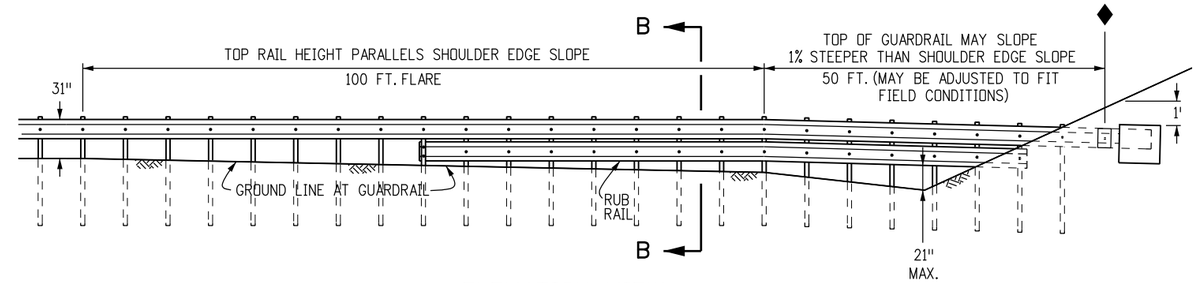

ELEVATION VIEW

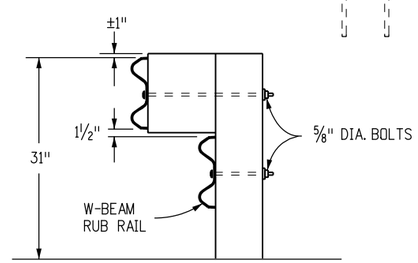

SECTION B-B

MOUNT A W-BEAM RUB RAIL 1-½ IN. BELOW THE TOP RAIL WHEN THE TOP RAIL HEIGHT EXCEEDS 33 IN. ABOVE THE GROUND

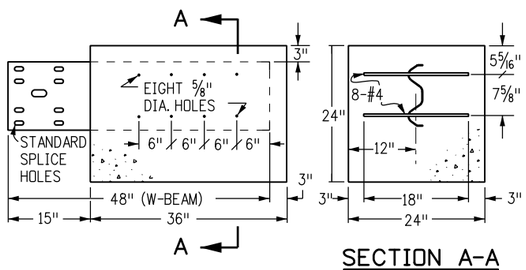

SECTION A-A

TYPE 3B ANCHOR BLOCK DETAIL

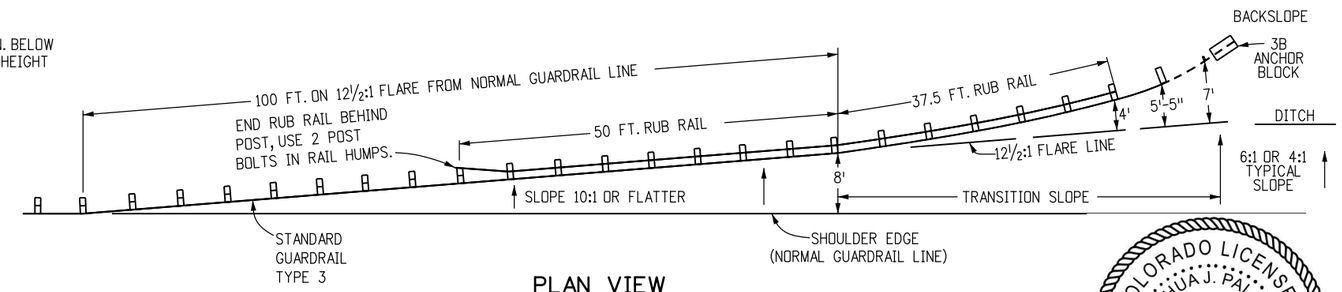

PLAN VIEW

END ANCHORAGE TYPE 3B (RUB RAIL)

(WITH ROADSIDE DITCH AT GUARDRAIL)

◆ END OF GUARDRAIL PAY LENGTH

COLORADO LICENSED
JOSHUA J. PALMER
50188
03/23/20
PROFESSIONAL ENGINEER

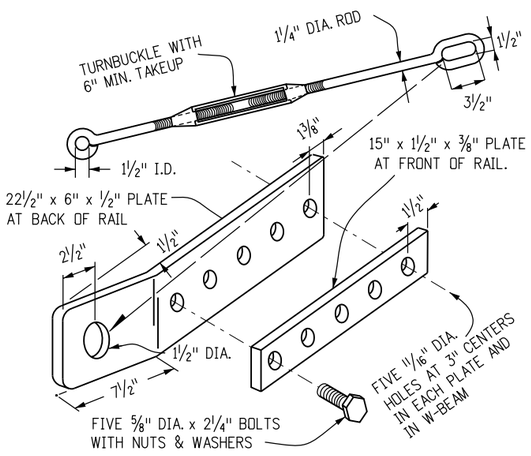

TYPE 3D HARDWARE DETAILS

NOTE: ALL PARTS SHALL BE GALVANIZED

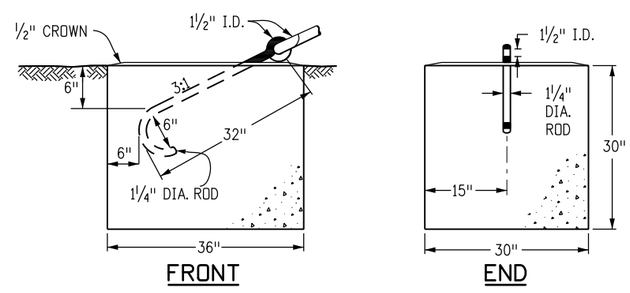

FRONT END

TYPE 3D ANCHOR BLOCK DETAIL

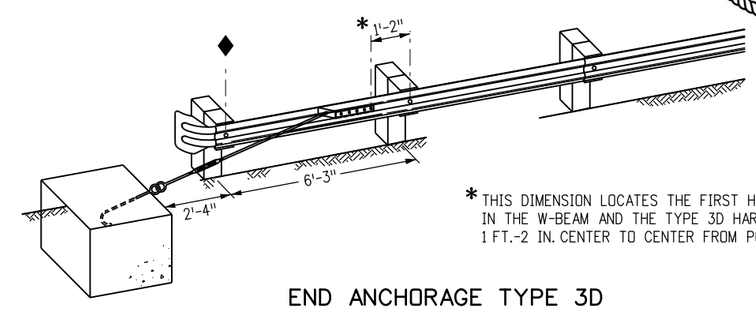

* THIS DIMENSION LOCATES THE FIRST HOLE IN THE W-BEAM AND THE TYPE 3D HARDWARE. 1 FT.-2 IN. CENTER TO CENTER FROM POST BOLT HOLE.

END ANCHORAGE TYPE 3D DEPARTURE TERMINAL

Computer File Information		Sheet Revisions	
Creation Date: 07/31/19		Date:	Comments
Designer Initials: JBK	(R-X)		
Last Modification Date: 03/05/20	(R-X)		
Detailer Initials: LTA	(R-X)		
CAD Ver.: MicroStation V8 Scale: Not to Scale Units: English	(R-X)		

Colorado Department of Transportation
2829 West Howard Place
CDOT HQ, 3rd Floor
Denver, CO 80204
Phone: 303-757-9021 FAX: 303-757-9868
Project Development Branch JBK

MIDWEST GUARDRAIL SYSTEM (MGS) TYPE 3 W-BEAM 31 INCHES

Issued by the Project Development Branch: July 31, 2019

STANDARD PLAN NO.
M-606-1
Standard Sheet No. 5 of 19
Project Sheet Number:

OFFSET NOTES

1. POST OFFSET DIMENSIONS ARE GIVEN TO THE CENTER OF THE TRAFFIC FACE OF POSTS.
2. THE GUARDRAIL BETWEEN POST (1) THRU (8) IS ON A STRAIGHT LINE FLARE.

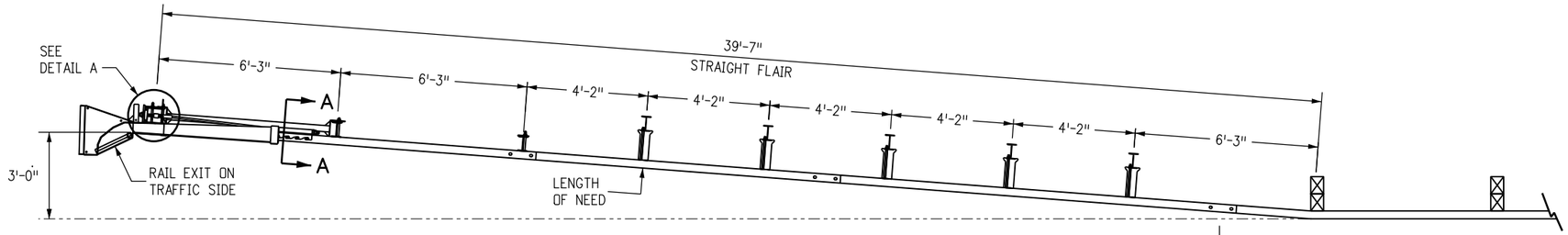

PLAN

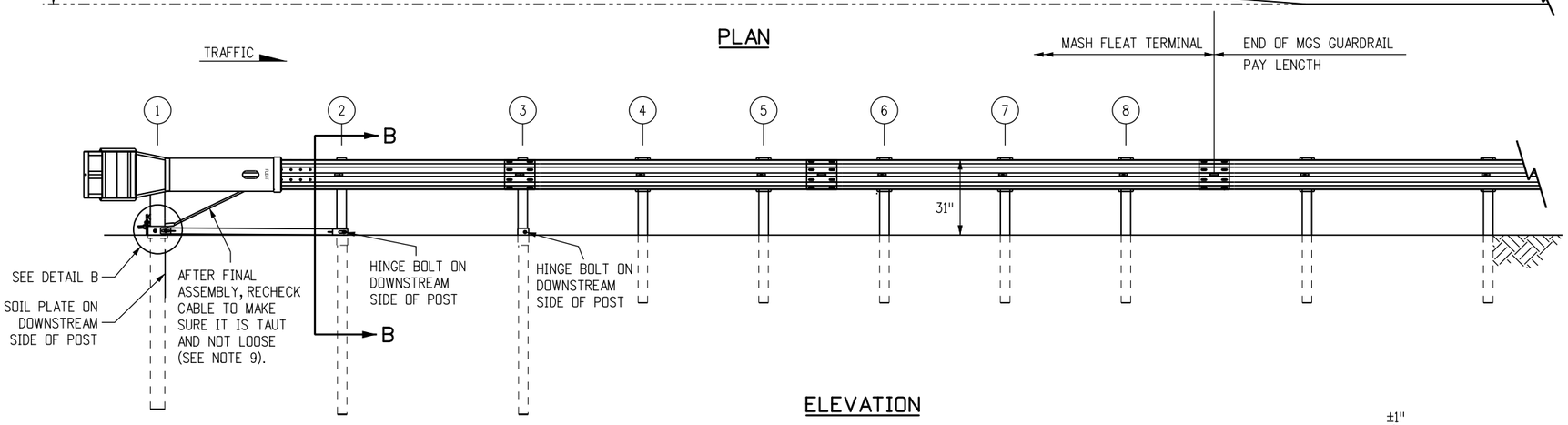

ELEVATION

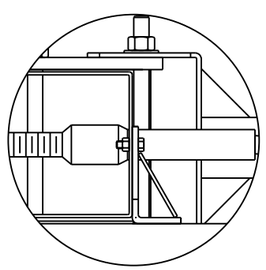

DETAIL A
IMPACT HEAD CONNETION

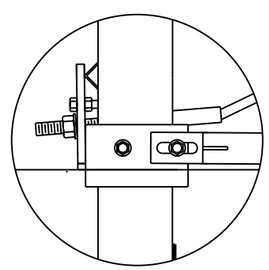

DETAIL B
POST #1 CONNECTION

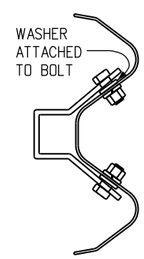

SECTION A-A
ANCHOR BRACKET

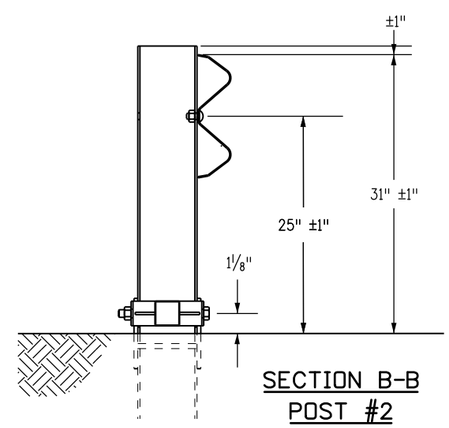

SECTION B-B
POST #2

MFLEAT TERMINAL
(MASH CERTIFIED)

NOTES

1. THE END ANCHORAGE (FLARED) SHALL BE THE MFLEAT TERMINAL, AS MANUFACTURED BY ROAD SYSTEMS INC. (TELEPHONE #: 432-263-2435). ONE END ANCHORAGE (FLARED) SHALL INCLUDE ALL POST, RAIL, AND ALL HARDWARE ITEMS REQUIRED FOR A COMPLETE UNIT. THE END ANCHORAGE (FLARED) SHALL BE INSTALLED CONFORMING TO THE MANUFACTURER'S RECOMMENDATIONS. THE CONTRACTOR SHALL PROVIDE A COPY OF THE MANUFACTURER'S INSTALLATION INSTRUCTIONS AND PARTS LIST TO THE ENGINEER PRIOR TO INSTALLATION OF THE DEVICE.
2. RETROREFLECTOR TABS SHALL NOT BE USED ON END ANCHORAGE POSTS.
3. DELINEATION SHALL BE APPLIED TO THE END PIECE, AND SHALL NOT BE PAID FOR SEPARATELY BUT SHALL BE INCLUDED IN THE WORK.
4. AESTHETIC TREATMENT OPTIONS MAY BE AVAILABLE WITH PRIOR APPROVAL OF THE PROJECT ENGINEER. CONTACT THE MANUFACTURER FOR APPROVED AESTHETIC TREATMENT OPTIONS.
5. ALL BOLTS, NUTS, CABLE ASSEMBLIES, CABLE ANCHORS AND BEARING PLATES SHALL BE GALVANIZED.
6. THE LOWER SECTIONS OF THE POSTS 1, 2, AND 3 SHALL NOT PROTRUDE MORE THAN 4 INCHES ABOVE THE GROUND (MEASURED ALONG A 5 FOOT CORD). SITE GRADING MAY BE NECESSARY TO MEET THIS REQUIREMENT.
7. THE LOWER SECTIONS OF THE HINGED POSTS SHOULD NOT BE DRIVEN WITH THE UPPER POST ATTACHED. IF THE POST IS PLACED IN A DRILLED HOLE, THE BACKFILL MATERIAL MUST BE SATISFACTORILY COMPACTED TO PREVENT SETTLEMENT.
8. WHEN COMPETENT ROCK IS ENCOUNTERED, A 12 INCH DIA. POST HOLE, DRILLED 20 INCHES DEEP INTO THE ROCK SURFACE SHALL BE USED IF APPROVED BY THE ENGINEER FOR POSTS 1 AND/OR 2. GRANULAR MATERIAL SHALL BE PLACED IN THE BOTTOM OF THE HOLE, APPROXIMATELY 2.5 INCHES DEEP TO PROVIDE DRAINAGE. THE FIRST AND/OR SECOND POST SHALL BE FIELD CUT TO LENGTH, PLACED IN THE HOLE AND BACKFILLED WITH SUITABLE BACKFILL. THE SOIL PLATE MAY BE TRIMMED IF REQUIRED.
9. THE BREAKAWAY CABLE ASSEMBLY SHALL BE TAUT. A LOCKING DEVICE (VICE GRIPS OR CHANNEL LOCK PLIERS) SHOULD BE USED TO PREVENT THE CABLE FROM TWISTING WHEN TIGHTENING NUTS.

END ANCHORAGES (FLARED)

Computer File Information		Sheet Revisions	
Creation Date: 07/31/19		Date:	Comments
Designer Initials: JBK	(R-X)	03/05/20	Replaced the SRT-31 and FLEAT 350 flared terminals with the MFLEAT flared terminal to be MASH compliant.
Last Modification Date: 03/05/20	(R-X)		
Detailer Initials: LTA	(R-X)		
CAD Ver.: MicroStation V8 Scale: Not to Scale Units: English	(R-X)		

Colorado Department of Transportation
2829 West Howard Place
CDOT HQ, 3rd Floor
Denver, CO 80204
Phone: 303-757-9021 FAX: 303-757-9868
Project Development Branch JBK

MIDWEST GUARDRAIL SYSTEM (MGS) TYPE 3 W-BEAM 31 INCHES

Issued by the Project Development Branch: July 31, 2019

STANDARD PLAN NO.
M-606-1
Standard Sheet No. 6 of 19
Project Sheet Number:

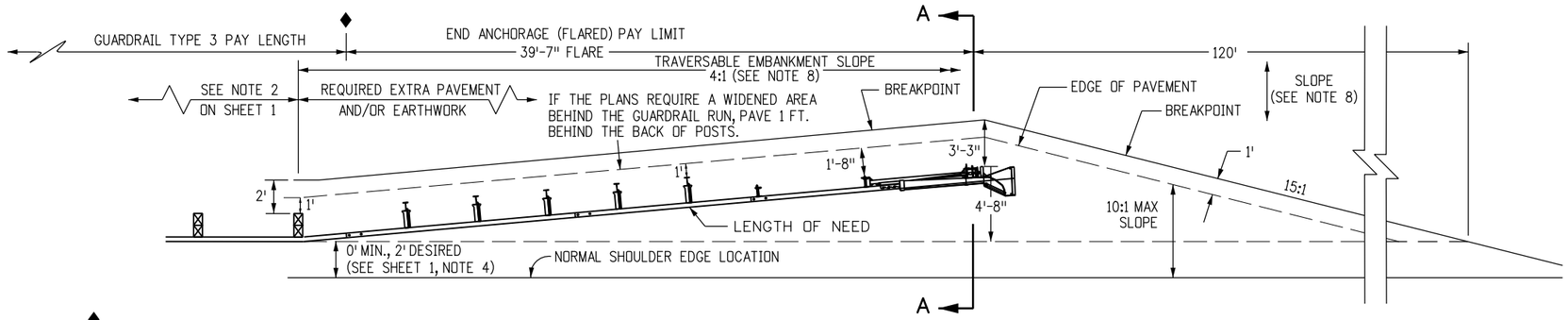

PLAN VIEW
WIDENING FOR END ANCHORAGE (FLARED) *

* THIS PLAN VIEW SHOWS ONLY THE SRT-31. THE FLEAT-350 USES THE SAME WIDENING DETAILS.

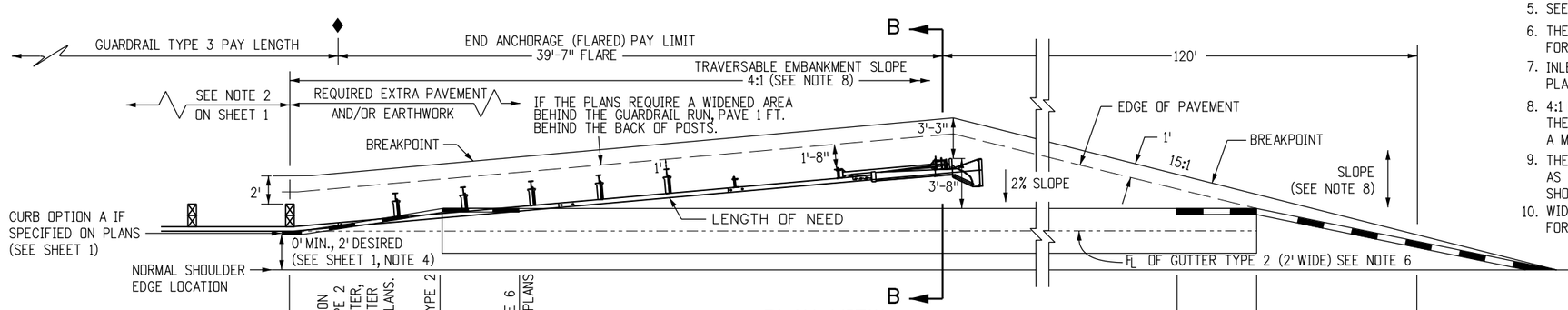

PLAN VIEW
WIDENING FOR END ANCHORAGE (FLARED)
WITH CURB OPTION A *

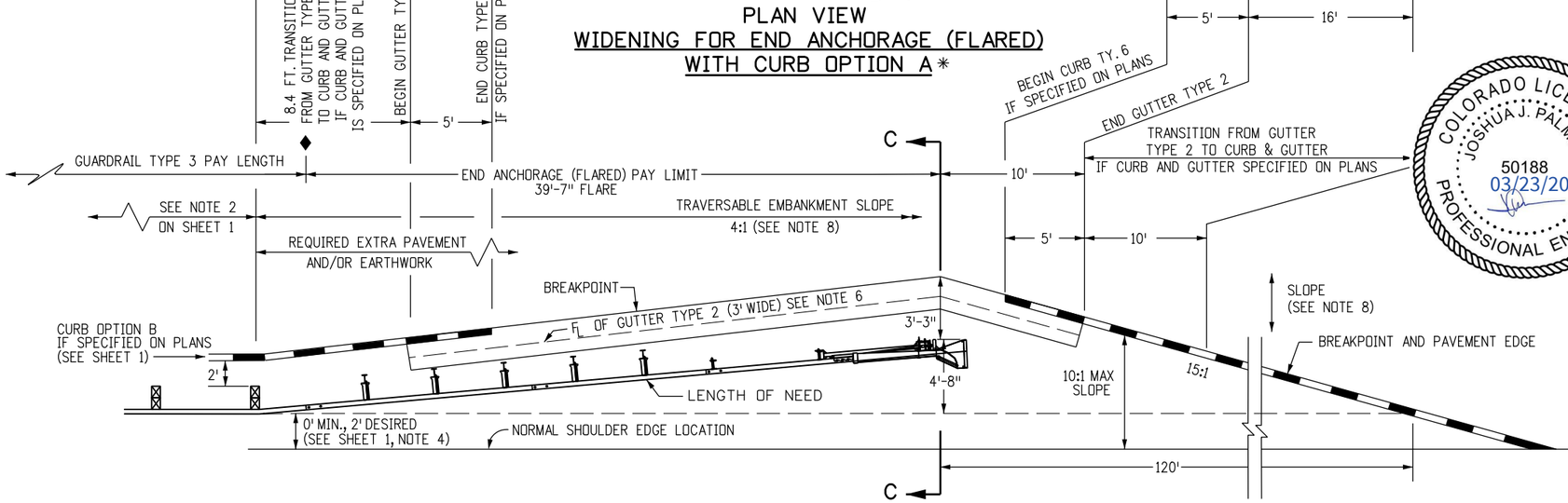

PLAN VIEW
WIDENING FOR END ANCHORAGE (FLARED) WITH CURB OPTION B *

NOTES

1. PAYMENT FOR THE ADDED EMBANKMENT (APPROXIMATELY 45 CU. YDS.) FOR THE FLARE SHALL BE AS FOLLOWS:
   A. UNDER PAY ITEM 203 WHEN THE CONTRACT PLAN INCLUDES PAY ITEM 203
   B. INCLUDED IN THE COST OF THE END ANCHORAGE (FLARED) WHEN THE CONTRACT PLANS DO NOT INCLUDE PAY ITEM 203. THE ADDED EMBANKMENT SHALL BE CONSTRUCTED IN ACCORDANCE WITH SUBSECTION 203.07, AASHTO T 99.
2. WHEN THE WIDENED AREA IS PAVED, PAYMENT FOR THE PAVEMENT (APPROX. 70 SQ. YDS.) SHALL BE AS FOLLOWS:
   A. UNDER PAY ITEM 403 OR 412 WHEN THE CONTRACT PLAN INCLUDES PAY ITEM 403 OR 412
   B. INCLUDED IN THE COST OF THE END ANCHORAGE (FLARED) WHEN THE CONTRACT PLAN DOES NOT INCLUDE PAY ITEM 403 OR 412 (SEE SHEET 1, NOTE 2 FOR PAVEMENT TYPES)
3. CONCRETE PAVED AREAS SHALL HAVE THEIR TAPERED ENDS SQUARED OFF AS DIRECTED BY THE ENGINEER.
4. WHEN OVERLAY PAVING, THE FINISHED SURFACE AT EACH POST SHALL NOT BE ABOVE THE TOP BREAKAWAY HOLE OR STRUT ASSEMBLY. THE WIDENED AREA AT THE FLARED END ANCHORAGE SHOULD NOT BE OVERLAYED UNLESS PAVEMENT CONDITIONS WARRANT IT BEING OVERLAYED. ANY OVERLAY PAVEMENT ABUTTING THE FLARED END ANCHORAGE SHALL BE TAPERED TO PREVENT A DROP IN THE PAVED SURFACE BELOW THE RAIL.
5. SEE SHEETS 1, 2, 3, AND 5 FOR STANDARD TYPE 3 GUARDRAIL INSTALLATION DETAILS.
6. THE COST OF THE GUTTER WILL BE PAID FOR AS "GUTTER TYPE 2 (2 FT.)" FOR A LENGTH OF 134 FT. OR "GUTTER TY. 2 (3 FT.)" FOR A LENGTH OF 40 FT.
7. INLETS OR RUNDOWNS MAY BE USED INSTEAD OF THE GUTTER IF SPECIFIED ON THE PLANS. NO ADDITIONAL CURB SHALL BE ADDED IN THE VICINITY OF THE END ANCHORAGE.
8. 4:1 OR FLATTER SLOPES IN THE TRAVERSABLE AREA SHALL BE USED BEHIND THE END ANCHORAGE, AND IN ADVANCE OF POST 1. IF THIS IS NOT POSSIBLE, A MINIMUM 3:1 SLOPE MAY BE USED IF APPROVED BY THE ENGINEER.
9. THE WIDENED AREA, EXCEPT FOR CURB OPTION A, SHALL HAVE THE SAME GRADING AS THE ADJACENT GUARDRAIL: 10:1 OR FLATTER IF MORE THAN 2 FT. FROM SHOULDER OR SLOPE EQUAL TO ROADWAY SLOPE IF 2 FT. OR LESS FROM SHOULDER.
10. WIDENING FOR END ANCHORAGES SHALL BE PAVED ON INTERSTATES AND FREEWAYS. FOR OTHER HIGHWAYS, PAVING SHALL BE AS SHOWN ON THE PLANS.

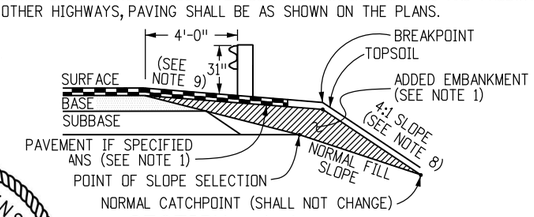

SECTION A-A

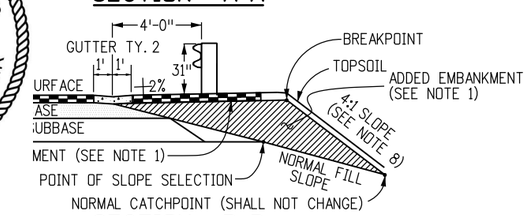

SECTION B-B

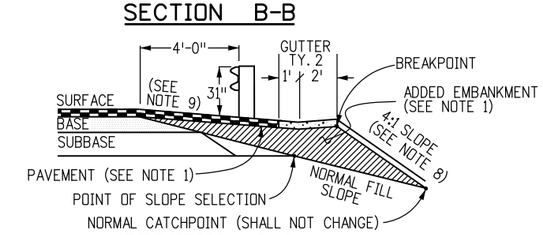

SECTION C-C

COLORADO LICENSED
JOSHUA J. PALMER
50188
03/23/20
PROFESSIONAL ENGINEER

Computer File Information		Sheet Revisions	
Creation Date: 07/31/19		Date:	Comments
Designer Initials: JBK	(R-X)	03/05/20	Replaced the old end anchorage drawings with the new MFLEAT end anchorage drawing.
Last Modification Date: 03/05/20	(R-X)		
Detailer Initials: LTA	(R-X)		
CAD Ver.: MicroStation V8 Scale: Not to Scale Units: English	(R-X)		

Colorado Department of Transportation
2829 West Howard Place
CDOT HQ, 3rd Floor
Denver, CO 80204
Phone: 303-757-9021 FAX: 303-757-9868
Project Development Branch JBK

MIDWEST
GUARDRAIL SYSTEM (MGS)
TYPE 3 W-BEAM 31 INCHES

Issued by the Project Development Branch: July 31, 2019

STANDARD PLAN NO.
M-606-1
Standard Sheet No. 7 of 19
Project Sheet Number:

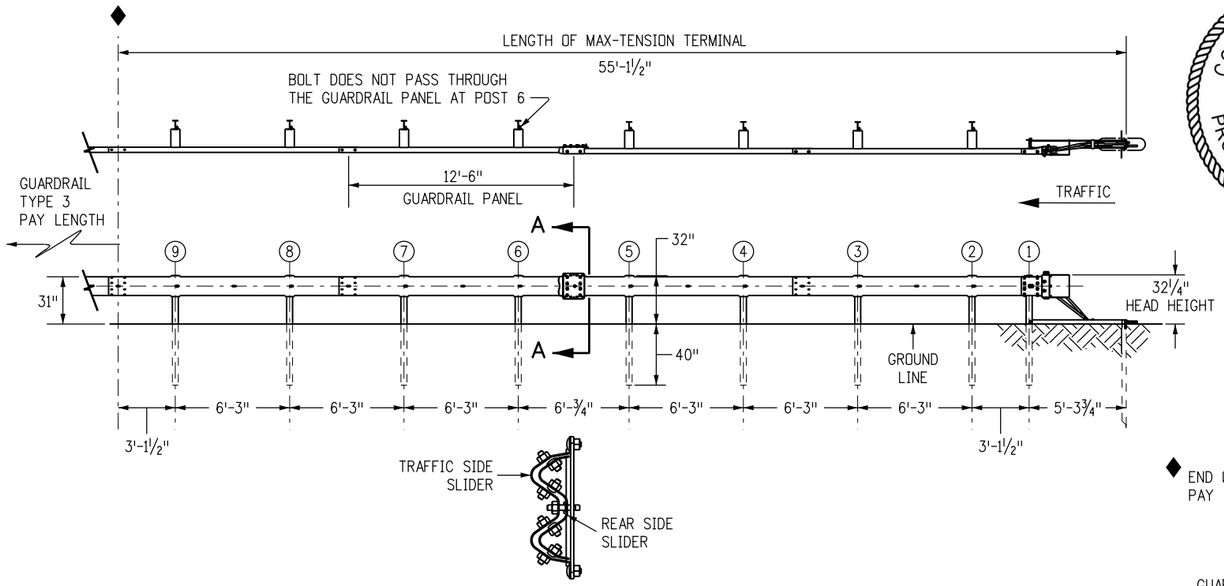

SECTION A-A

MAX-TENSION TERMINAL END ANCHORAGE (NONFLARED)

(MASH CERTIFIED)

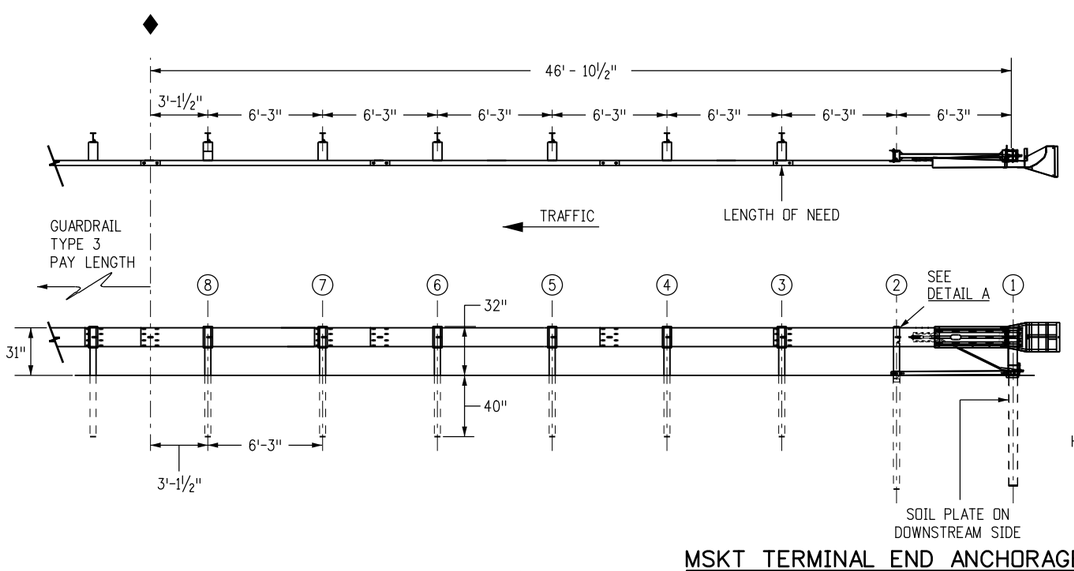

MSKT TERMINAL END ANCHORAGE (NONFLARED)

(MASH CERTIFIED)

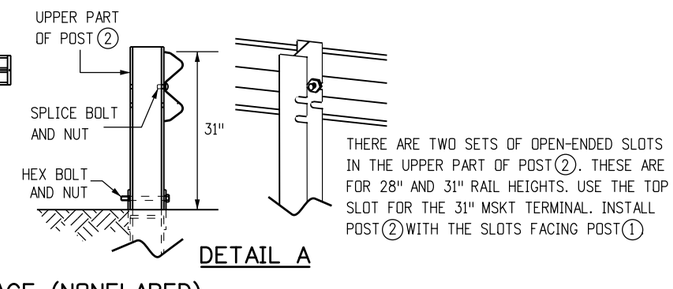

DETAIL A

END OF GUARDRAIL PAY LENGTH

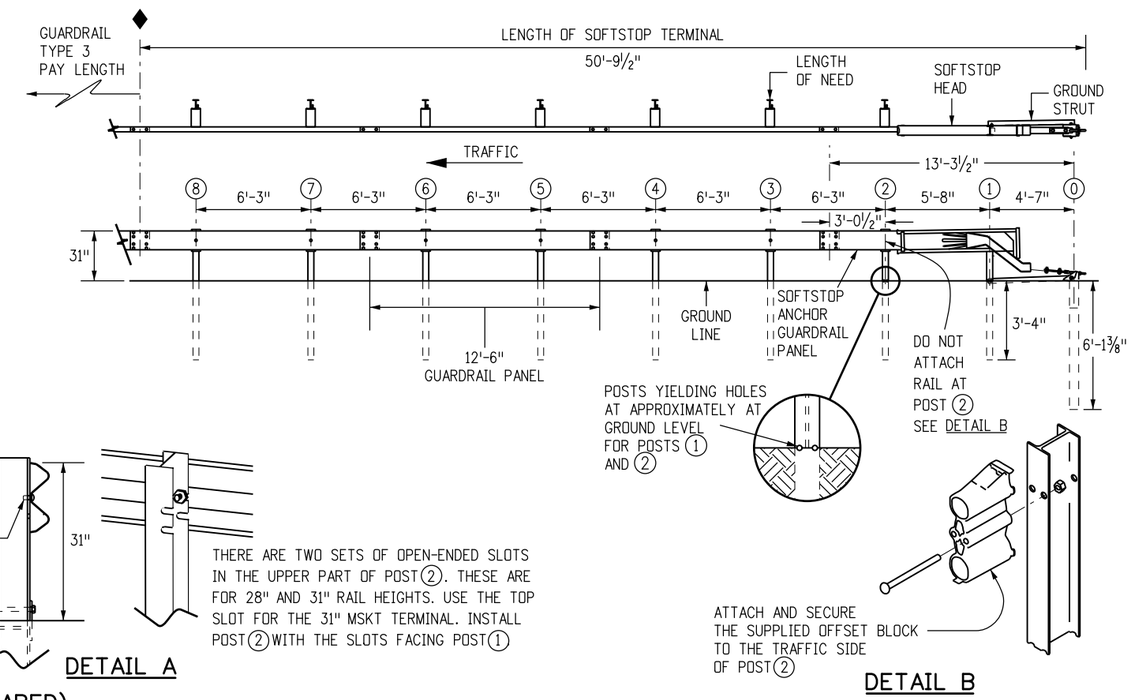

DETAIL B

SOFTSTOP TERMINAL END ANCHORAGE (NONFLARED)

(MASH CERTIFIED)

END ANCHORAGES (NONFLARED)

COLORADO LICENSED
JOSHUA J. PALMER
50188
03/23/20
PROFESSIONAL ENGINEER

NOTES FOR NONFLARED

1. THE END ANCHORAGE (NONFLARED) SHALL EITHER BE THE SOFTSTOP AS MANUFACTURED BY TRINITY INDUSTRIES, INC. (TEL. #: 1-888-356-2363), OR THE MAX-TENSION AS MANUFACTURED BY LINDSAY TRANSPORTATION SOLUTIONS (TEL. #: 402-829-6800), OR THE MSKT AS MANUFACTURED BY ROAD SYSTEMS, INC. (TEL. #: 432-263-2435). THE END ANCHORAGE (NONFLARED) SHALL INCLUDE ALL POST, RAIL, AND HARDWARE ITEMS REQUIRED FOR A COMPLETE UNIT. THE END ANCHORAGE (NONFLARED) SHALL BE INSTALLED CONFORMING TO THE MANUFACTURER'S RECOMMENDATIONS. THE CONTRACTOR SHALL PROVIDE A COPY OF THE MANUFACTURER'S INSTALLATION INSTRUCTIONS AND PARTS LIST TO THE ENGINEER PRIOR TO THE INSTALLATION OF THE DEVICE.
2. DO NOT ATTACH THESE END ANCHORAGES DIRECTLY TO A RIGID BARRIER (EX. CONCRETE BARRIER, STEEL BARRIER, CONCRETE STRUCTURE) WITHOUT A PROPER TRANSITION.
3. CONNECTIONS TO W-BEAMS WHERE THE SPLICE IS NOT AT MID-SPAN BUT AT A POST CAN BE MADE USING A 3'-1½", 9'-4½", OR 15'-7½" W-BEAM PANEL DOWNSTREAM OF TRAFFIC.
4. FOR MSKT END ANCHORAGES (NONFLARED), USE THE MANUFACTURER'S SPECIFIED STEEL FOUNDATION TUBES FOR POSTS 1 AND 2.
5. RETROREFLECTOR TABS SHALL NOT BE USED ON END ANCHORAGE POSTS.
6. DELINEATION SHALL BE APPLIED TO THE END PIECE AND SHALL NOT BE PAID FOR SEPARATELY BUT BE INCLUDED IN THE COST OF THE WORK. SEE STANDARD PLAN S-612-1.

Computer File Information		Sheet Revisions	
Creation Date: 07/31/19		Date:	Comments
Designer Initials: JBK	(R-X)		
Last Modification Date: 03/05/20	(R-X)		
Detailer Initials: LTA	(R-X)		
CAD Ver.: MicroStation V8 Scale: Not to Scale Units: English	(R-X)		

Colorado Department of Transportation
2829 West Howard Place
CDOT HQ, 3rd Floor
Denver, CO 80204
Phone: 303-757-9021 FAX: 303-757-9868
Project Development Branch JBK

MIDWEST GUARDRAIL SYSTEM (MGS) TYPE 3 W-BEAM 31 INCHES

Issued by the Project Development Branch: July 31, 2019

STANDARD PLAN NO.
M-606-1
Standard Sheet No. 8 of 19
Project Sheet Number:

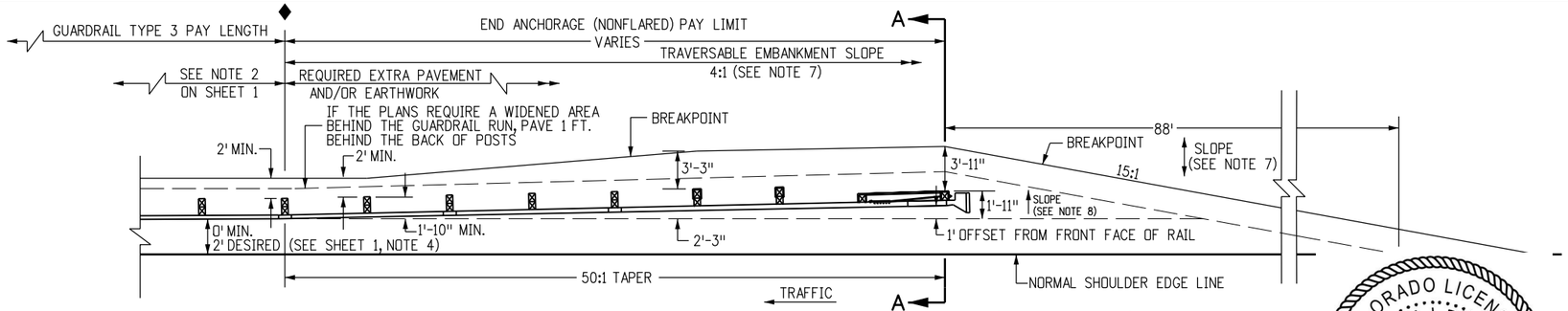

WIDENED AREA FOR END ANCHORAGE (NONFLARED)
PLAN VIEW

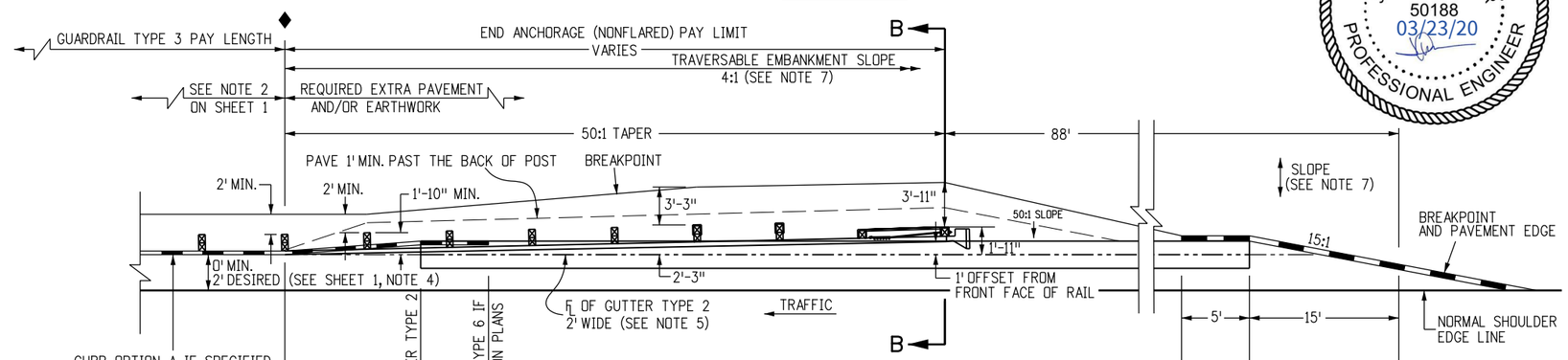

WIDENED AREA FOR END ANCHORAGE (NONFLARED)
WITH CURB OPTION A
PLAN VIEW

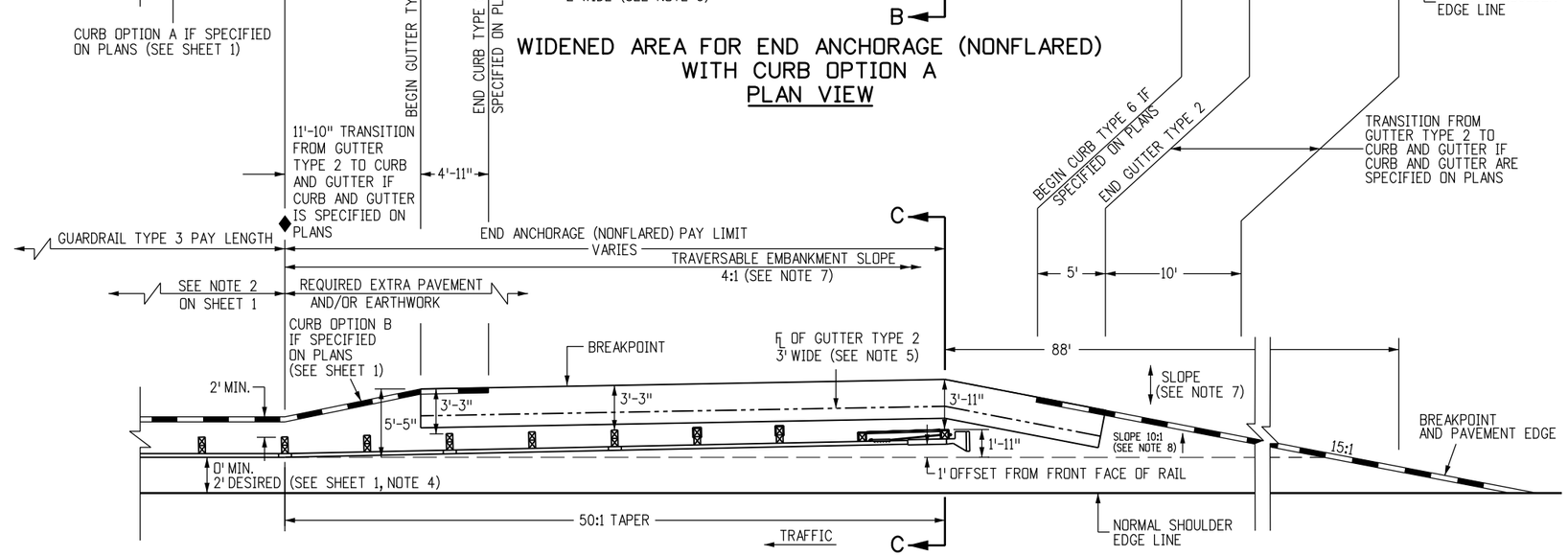

WIDENED AREA FOR END ANCHORAGE (NONFLARED) WITH CURB OPTION B
PLAN VIEW

COLORADO LICENSED
JOSHUA J. PALMER
50188
03/23/20
PROFESSIONAL ENGINEER

NOTES

1. PAYMENT FOR THE ADDED EMBANKMENT (APPROXIMATELY 25 CU. YDS.) FOR THE FLARE SHALL BE AS FOLLOWS:
   A. UNDER PAY ITEM 203 WHEN THE CONTRACT PLAN INCLUDES PAY ITEM 203.
   B. INCLUDED IN THE COST OF THE END ANCHORAGE (NONFLARED) WHEN THE CONTRACT PLANS DOES NOT INCLUDE PAY ITEM 203. THE ADDED EMBANKMENT SHALL BE BE CONSTRUCTED IN ACCORDANCE WITH SUBSECTION 203.07, AASHTO T 99.
2. WHEN THE WIDENED AREA IS PAVED, PAYMENT FOR THE PAVEMENT (APPROX. 39 SQ. YDS.) SHALL BE AS FOLLOWS:
   A. UNDER PAY ITEM 403 OR 412 WHEN THE CONTRACT PLAN INCLUDES PAY ITEM 403 OR 412.
   B. INCLUDED IN THE COST OF THE END ANCHORAGE (NONFLARED) WHEN THE CONTRACT PLAN DOES NOT INCLUDE PAY ITEM 403 OR 412, (SEE SHEET 1, NOTE 2 FOR PAYMENT TYPES).
3. WHEN OVERLAY PAVING, THE FINISHED SURFACE AT EACH POST SHALL NOT BE ABOVE THE TOP BREAKWAY HOLE OR STRUT ASSEMBLY. THE WIDENED AREA AT THE END ANCHORAGE (NONFLARED) SHALL NOT BE OVERLAYED UNLESS PAVEMENT CONDITIONS WARRANT IT BEING OVERLAYED. ANY OVERLAY PAVEMENT ABUTTING THE END ANCHORAGE (NONFLARED) SHALL BE TAPERED TO PREVENT A DROP IN THE PAVED SURFACE BELOW THE RAIL.
4. SEE SHEETS 1, 2, 3, AND 5 FOR STANDARD TYPE 3 GUARDRAIL INSTALLATION DETAILS.
5. THE COST OF THE GUTTER WILL BE PAID FOR AS "GUTTER TYPE 2 (2 FT.)" FOR A LENGTH OF 111 FT., OR "GUTTER TY. 2 (3 FT.)" FOR A LENGTH OF 50 FT.
6. INLETS OR RUNDOWNS MAY BE USED INSTEAD OF THE GUTTER IF SPECIFIED ON THE PLANS. NO ADDITIONAL CURB SHALL BE ADDED IN THE VICINITY OF THE END TREATMENT.
7. 4:1 OR FLATTER SLOPES IN THE TRAVERSABLE AREA SHALL BE USED BEHIND THE END ANCHORAGE AREA, AND IN ADVANCE OF POST 1. IF THIS IS NOT POSSIBLE A MINIMUM 3:1 SLOPE MAY BE USED IF APPROVED BY THE ENGINEER.
8. THE WIDENED AREA, EXCEPT FOR CURB OPTION A, SHALL HAVE THE SAME GRADING AS BENEATH THE ADJACENT GUARDRAIL: 10:1 OR FLATTER IF MORE THAN 2 FT. FROM SHOULDER, OR SLOPE EQUAL TO ROADWAY SLOPE IF 2 FT. OR LESS FROM SHOULDER.
9. WIDENING FOR END ANCHORAGES SHALL BE PAVED ON INTERSTATES AND FREEWAYS. FOR OTHER HIGHWAYS, PAVING SHALL BE AS SHOWN ON THE PLANS.

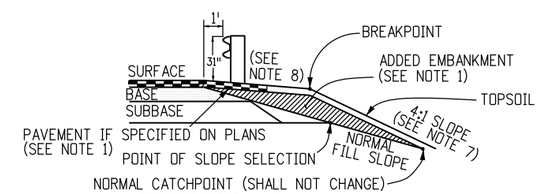

SECTION A-A

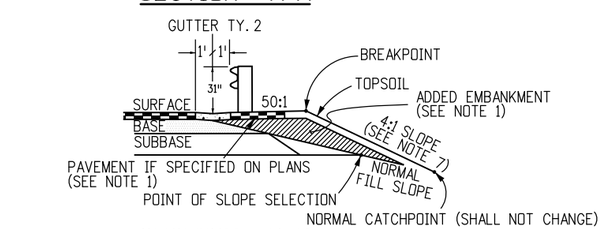

SECTION B-B

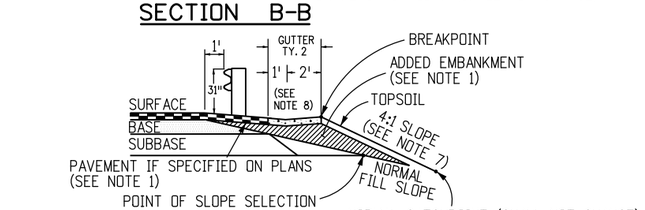

SECTION C-C

Computer File Information		Sheet Revisions	
Creation Date: 07/31/19		Date:	Comments
Designer Initials: JBK	R-X		
Last Modification Date: 03/05/20	R-X		
Detailer Initials: LTA	R-X		
CAD Ver.: MicroStation V8 Scale: Not to Scale Units: English	R-X		

Colorado Department of Transportation
2829 West Howard Place
CDOT HQ, 3rd Floor
Denver, CO 80204
Phone: 303-757-9021 FAX: 303-757-9868
Project Development Branch JBK

MIDWEST
GUARDRAIL SYSTEM (MGS)
TYPE 3 W-BEAM 31 INCHES

Issued by the Project Development Branch: July 31, 2019

STANDARD PLAN NO.
M-606-1
Standard Sheet No. 9 of 19
Project Sheet Number:

MEDIAN TERMINAL NOTES

1. THE MEDIAN TERMINAL SHALL BE THE MAX-TENSION MEDIAN AS MANUFACTURED BY BY BARRIER SYSTEM BY LINDSAY (LINDSAY TRANSPORTATION SOLUTIONS) (TEL #: 888 800-3691).
2. THE MAX-TENSION SHALL BE APPLIED DIRECTLY TO W-BEAM GUARDRAIL SYSTEMS AT, OR TRANSITIONED TO, 31 INCH WITH PANELS AND POST SPACING CONFIGURED AT MID-SPAN SPLICE. TRANSITIONS TO STRONG POST W-BEAM GUARDRAIL SYSTEMS OR OTHER BARRIERS WHERE THE SPLICE IS NOT MID-SPAN SHALL BE ACCOMPLISHED USING A 3 FT. 1-1/2 INCH, 9 FT. 4-1/2 INCH OR 15 FT. 7-1/2 INCH PANELS AFTER THE MAX-TENSION SYSTEM (MIN. OF 50 FT. DOWNSTREAM OF THE FIRST POST). TRANSITIONS TO OTHER BARRIER SYSTEMS SHALL ALSO BE AT A MIN. OF 50 FT. DOWNSTREAM FROM THE FIRST POST. SEE SHEET 4.
3. THE MAX-TENSION SHALL NOT BE ATTACHED DIRECTLY TO RIGID BARRIERS SUCH AS CONCRETE BARRIERS, STEEL BARRIERS OR CONCRETE STRUCTURES WITHOUT PROPER TRANSITION. IF ROCK OR STIFF SOIL IS ENCOUNTERED, THE POSTS AND SOIL ANCHOR MAY BE INSTALLED BY AUGURING AND BACKFILLING THE HOLE.
4. EITHER 8 INCH OR 12 INCH COMPOSITE OR TIMBER BLOCKOUTS SHALL BE USED PER MANUFACTURE'S RECOMMENDATIONS.
5. EITHER 12 FT.-6 INCH OR 25 FOOT PANELS SHALL BE USED DEPENDING ON SITE CONDITIONS OR CONNECTED BARRIER SYSTEMS.
6. RAIL PANELS SHALL BE LAPPED PER MANUFACTURER'S INSTALLATION MANUAL, REGARDLESS OF AN UPSTREAM OR DOWNSTREAM END SYSTEM POSITION.
7. ALL STEEL COMPONENTS SHALL BE GALVANIZED PER ASTM A123 OR EQUIVALENT UNLESS OTHERWISE STATED.
8. ONE MEDIAN TERMINAL SHALL INCLUDE ALL POSTS, RAIL, AND HARDWARE ITEMS REQUIRED FOR A COMPLETE UNIT. THE DEVICE SHALL BE INSTALLED IN CONFORMANCE WITH THE MANUFACTURER'S INSTRUCTIONS. THE CONTRACTOR SHALL PROVIDE A COPY OF THE MANUFACTURER'S INSTALLATION INSTRUCTIONS AND PARTS LISTS TO THE ENGINEER PRIOR TO THE INSTALLATION OF THE DEVICE.
9. UNLESS OTHERWISE SPECIFIED ON THE PLANS, THE MEDIAN TERMINAL SHALL BE INSTALLED FOR BIDIRECTIONAL TRAFFIC APPLICATION.
10. EACH INSTALLATION SHALL BE SUPERVISED AND CERTIFIED AS CORRECT UPON COMPLETION BY A REPRESENTATIVE OF THE DEVICE MANUFACTURER OR BY AN EMPLOYEE OF THE CONTRACTOR WHO IS A CERTIFIED INSTALLER. THE CERTIFIED INSTALLER SHALL HAVE COMPLETED DEVICE TRAINING AND SHALL BE REGISTERED WITH THE MANUFACTURER AS A CERTIFIED INSTALLER.
11. DELINEATION, IF REQUIRED, SHALL BE APPLIED TO THE END PIECE AND WILL NOT BE PAID FOR SEPARATELY BUT SHALL BE INCLUDED IN THE COST OF THE WORK. SEE STANDARD PLAN S-612-1.

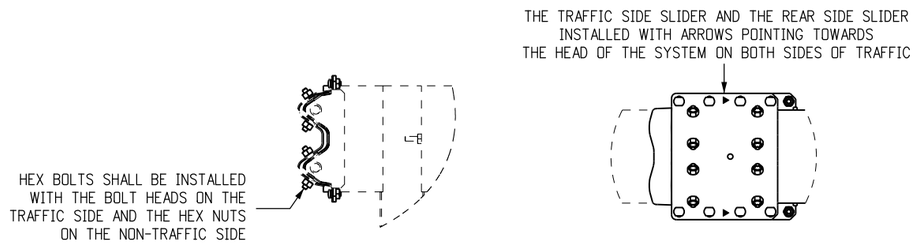

SECTION A-A

DETAIL A

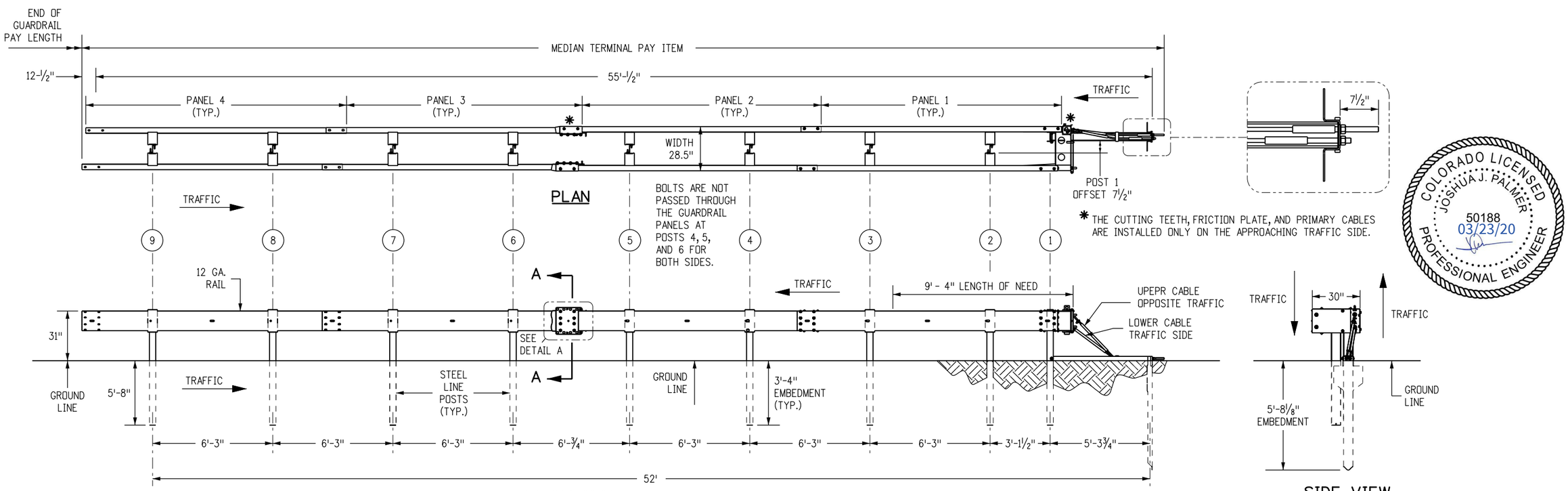

MAX-TENSION MEDIAN

(MASH CERTIFIED)

COLORADO LICENSED JOSHUA J. PALMER 50188 03/23/20 PROFESSIONAL ENGINEER

Computer File Information		Sheet Revisions	
Creation Date: 07/31/19		Date:	Comments
Designer Initials: JBK	(R-X)		
Last Modification Date: 03/05/20	(R-X)		
Detailer Initials: LTA	(R-X)		
CAD Ver.: MicroStation V8 Scale: Not to Scale Units: English	(R-X)		

Colorado Department of Transportation
2829 West Howard Place
CDOT HQ, 3rd Floor
Denver, CO 80204
Phone: 303-757-9021 FAX: 303-757-9868
Project Development Branch JBK

MIDWEST GUARDRAIL SYSTEM (MGS) TYPE 3 W-BEAM 31 INCHES

Issued by the Project Development Branch: July 31, 2019

STANDARD PLAN NO.
M-606-1
Standard Sheet No. 10 of 19
Project Sheet Number:

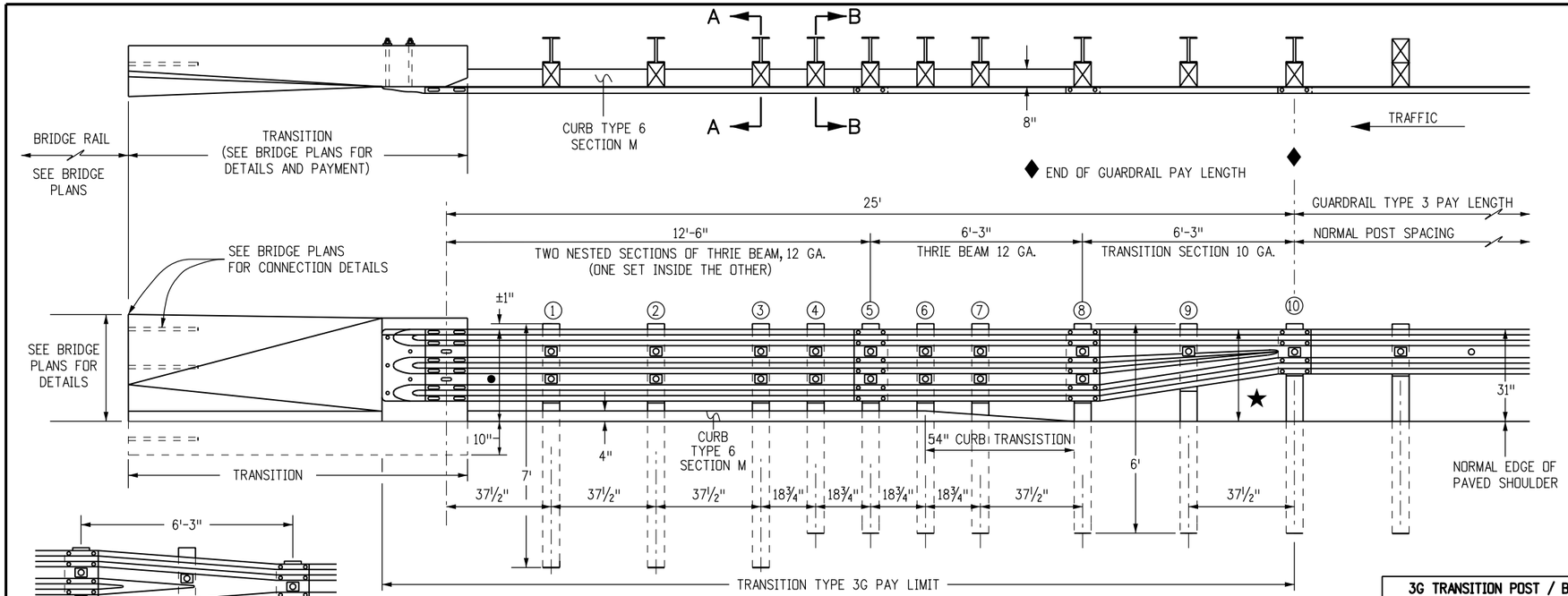

TRANSITION TYPE 3G

ALL POSTS SHALL BE STEEL

★ IF THE HEIGHT OF THE TRANSITION TYPES 3G OR 3H IS MORE THAN 31", THEN A SYMMETRICAL TRANSITION SECTION SHALL BE USED HERE.

● 31" FOR ASPHALT BRIDGE OVERLAY. 33.25" FOR POLYMER CONCRETE BRIDGE OVERLAY.

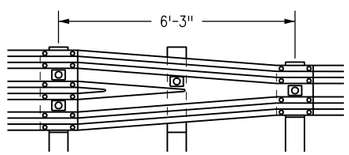

SYMMETRICAL TRANSITION SECTION

NOTES

1. TRANSITION TYPE 3G IS FOR USE AT BOTH ENDS OF BRIDGES ON TWO-WAY HIGHWAYS AND AT THE APPROACH END OF BRIDGES ON ONE-WAY HIGHWAYS.
2. TRANSITION TYPE 3H IS FOR USE AT THE TRAILING END OF BRIDGES ON ONE-WAY HIGHWAYS.
3. THE THRIE BEAM SECTION IN TRANSITION TYPES 3G AND 3H MAY BE SHOP BENT TO FIT CORRESPONDING RADIUS CURVES. HOWEVER, THE 6 FT.-3 IN. TRANSITION SECTION SHALL NOT BE BENT.
4. A TRANSITION SHALL BE REQUIRED BETWEEN TYPES 3G OR 3H AND THE BRIDGE RAILS. SEE STANDARD PLAN M-606-15 FOR THE TRANSITION TO TYPE 9 GUARDRAIL BARRIER.
5. TRANSITION TYPES 3G AND 3H ARE BOTH MASH COMPLIANT.
6. BACKUP PLATE IS NOT REQUIRED AT POSTS ON TYPE 3G AND 3H.
7. ⊡ THIS SYMBOL IN THE ELEVATION DRAWINGS SHOWS THE LOCATIONS WHERE A RECTANGULAR WASHER IS REQUIRED UNDER THE POST BOLT HEAD.
8. CURB TYPE 6 SECTION M, MAY BE ASPHALT OR CONCRETE. THE COST OF CURB IS INCLUDED IN THE WORK, UNLESS A SEPARATE PAY ITEM IS INCLUDED IN THE BID SCHEDULE.
9. FOR TYPE 3G, POSTS ① THRU ③ ARE 7 FT. LONG. ALL OTHER POSTS SHALL BE A STANDARD 6 FT. LONG UNLESS OTHERWISE SPECIFIED IN THE CONTRACT.
10. NOTCHED RAIL BLOCKS MANUFACTURED FROM SYNTHETIC MATERIAL WILL BE ACCEPTED AS ALTERNATIVES TO WOOD NOTCHED BLOCKS FOR USE WITH STEEL POSTS PROVIDED THAT THE BLOCKS HAVE RECEIVED FHWA APPROVAL AND ARE CERTIFIED AS IDENTICAL TO THE SPECIMENS USED FOR TESTING AND APPROVAL. STEEL BLOCKS ARE NOT ALLOWED.

3G TRANSITION POST / BLOCK SIZING

POST #	STEEL POST SIZE	BLOCKOUT SIZE
1 - 3	84" W6 X 15	6" X 12" X 19"
4 - 9	72" W6 X 9	6" X 12" X 19"
10	72" W6 X 9	6" X 12" X 14"

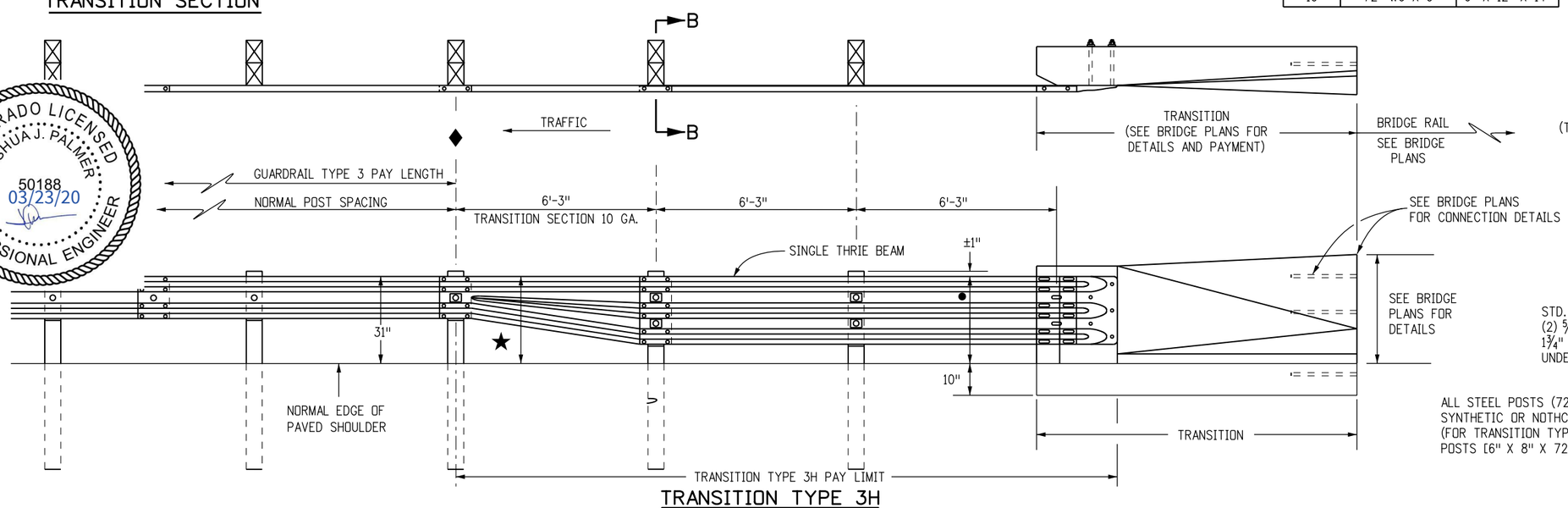

TRANSITION TYPE 3H

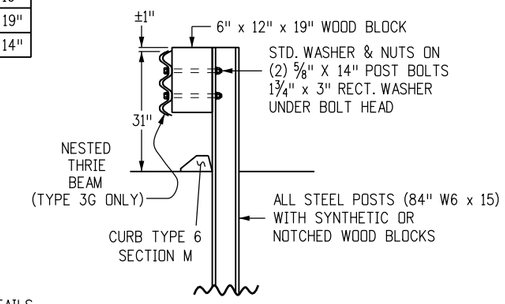

SECTION A-A

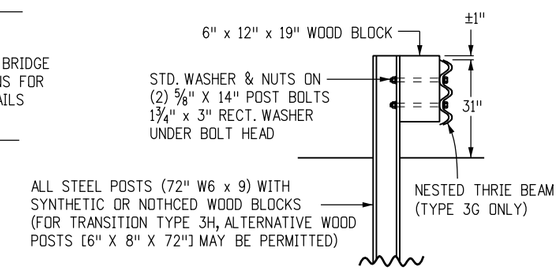

SECTION B-B

COLORADO LICENSED
JOSHUA J. PALMER
50188
03/23/20
PROFESSIONAL ENGINEER

Computer File Information	
Creation Date: 07/31/19	
Designer Initials: JBK	(R-X)
Last Modification Date: 03/05/20	(R-X)
Detailer Initials: LTA	(R-X)
CAD Ver.: MicroStation V8 Scale: Not to Scale Units: English	(R-X)

Sheet Revisions	
Date:	Comments
03/05/20	Revised Gen. Notes 3 & 5. Revised transition sections notes to see the "Bridge Plans" and deleted their x-sections details. Revised the ★ note.

Colorado Department of Transportation
2829 West Howard Place
CDOT HQ, 3rd Floor
Denver, CO 80204
Phone: 303-757-9021 FAX: 303-757-9868
Project Development Branch JBK

MIDWEST GUARDRAIL SYSTEM (MGS) TYPE 3 W-BEAM 31 INCHES

Issued by the Project Development Branch: July 31, 2019

STANDARD PLAN NO.
M-606-1
Standard Sheet No. 11 of 19
Project Sheet Number:

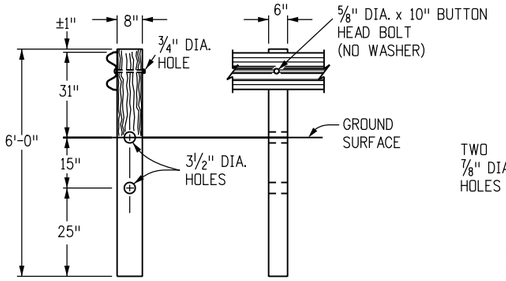

CONTROLLED RELEASING TERMINAL (CRT) POST ①

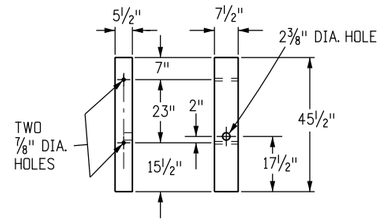

WOOD BREAKAWAY POST ②

POST	DIMENSIONS	TYPE
①	6" x 8" x 6'	CRT
②	5 1/2" x 7 1/2" x 45 1/2"	BREAKAWAY

POSTS

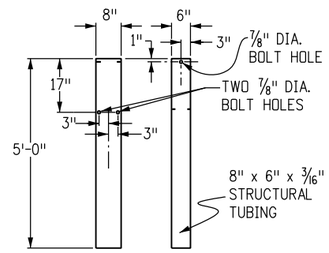

STEEL TUBE

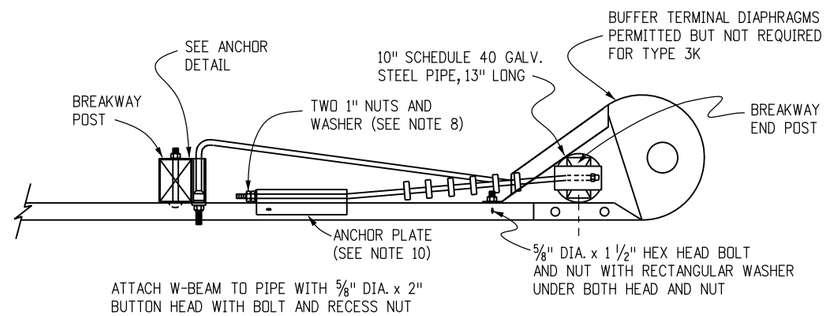

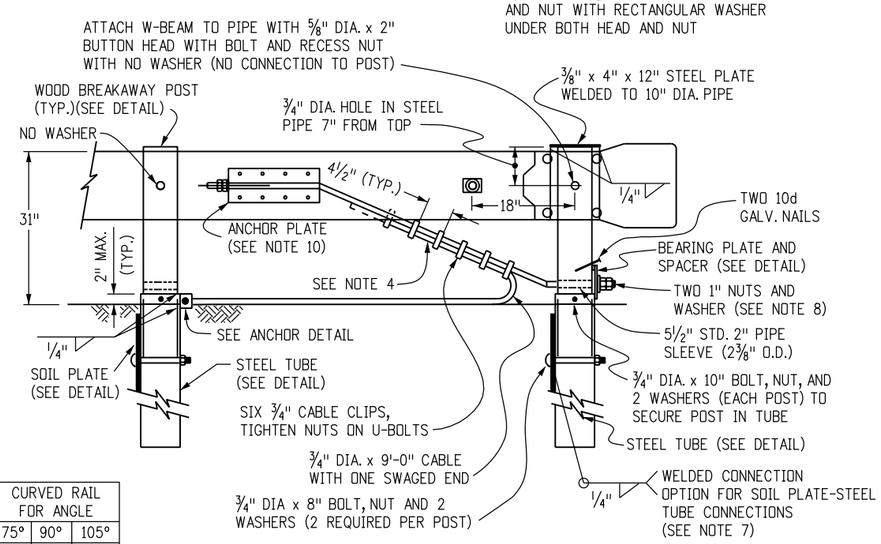

LOW SPEED END ANCHORAGE - TYPE 3K

NOTES

1. APPLICATION: THE TRANSITION TYPE 3J MAY BE USED TO SHIELD HAZARDS AT THE INTERSECTION OF TWO ROADWAYS. TYPICAL APPLICATIONS INCLUDE, BUT ARE NOT LIMITED TO, THE FOLLOWING:
   A. CANAL SERVICE ROADS AT BRIDGE ENDS.
   B. INTERRUPTIONS IN GUARDRAIL RUNS BY INTERSECTING ROADWAYS, ETC..

   THE LOW SPEED (<45 MPH) END ANCHORAGE TYPE 3K SHALL BE USED ONLY ON DRIVEWAYS AND LOW SPEED SERVICE ROADS. WHEN AN APPROVED CRASH-TESTED END TREATMENT IS REQUIRED USE THE END ANCHORAGE (FLARED) OR (NONFLARED) WITH 37 FT.-6 IN. LENGTH.
2. GRADING AND PAVING FOR THE 3J & 3K SHALL MATCH THE GRADING AND PAVING OF THE GUARDRAIL TO WHICH THEY ARE ATTACHED, AND SHALL BE IN ACCORDANCE WITH SHEET ONE OF THIS STANDARD. MAXIMUM FILL SLOPE SHALL BE 2:1.
3. THE RAIL IS NOT BOLTED TO THE CRT POST AT THE CENTER OF THE CURVE FOR THE 8 FT.-6 IN., 17 FT., AND 25 FT.-6 IN. RADII. PLATES SHALL CONFORM TO ASTM A 36, AND THE STRUCTURAL TUBING TO ASTM A 500.
4. THE 3/4IN. GALVANIZED WIRE ROPE (CABLE) SHALL CONFORM TO AASHTO M 30 TYPE II.
5. PLATES SHALL CONFORM TO ASTM A 36, AND STRUCTURAL TUBING TO ASTM A 500. WELDING SHALL MEET ALL REQUIREMENTS OF THE AMERICAN WELDING SOCIETY.
6. ALL STRUCTURAL STEEL SHALL BE GALVANIZED IN CONFORMANCE WITH ASTM A 123. POSTS SHALL NOT BE PUNCHED, DRILLED, CUT, OR WELDED AFTER GALVANIZING.
7. WHEN THE SOIL PLATE WELDED OPTION IS SELECTED, SOIL PLATE CONNECTION BOLT HOLES ARE NOT REQUIRED.
8. OUTSIDE NUT SHALL BE TORQUED AGAINST INSIDE NUT WITH THE CABLE INSTALLED TAUT BETWEEN THE ANCHOR PLATE AND FIRST POST.
9. ALL CURVED GUARDRAIL SHALL BE SHOP BENT.
10. SEE SHEET 5 FOR ANCHOR PLATE AND OTHER DETAILS.
11. THE STEEL TUBE MAY BE DRIVEN WITH WOOD POST INSERTED IF NO DAMAGE OCCURS TO THE POST OR BOLTS.

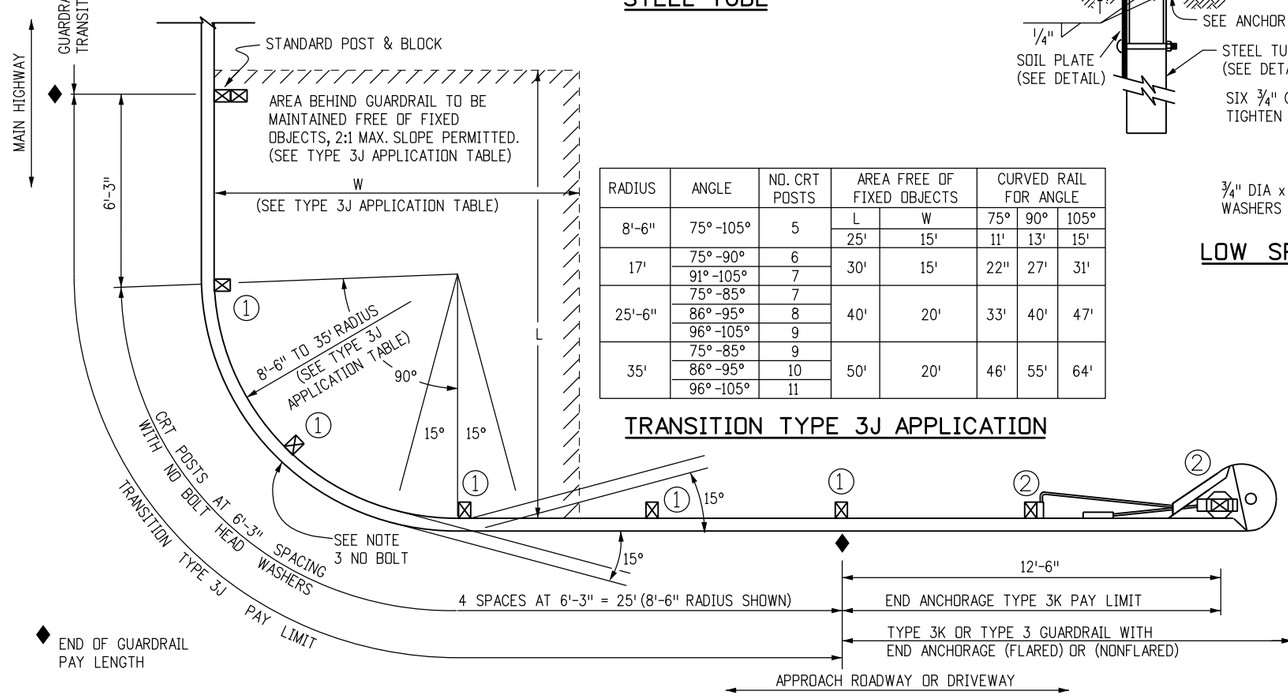

RADIUS	ANGLE	NO. CRT POSTS	AREA FREE OF FIXED OBJECTS		CURVED RAIL FOR ANGLE		
			L	W	75°	90°	105°
8'-6"	75°-105°	5	25'	15'	11'	13'	15'
17'	75°-90°	6	30'	15'	22"	27'	31'
	91°-105°	7					
25'-6"	75°-85°	7	40'	20'	33'	40'	47'
	86°-95°	8					
	96°-105°	9					
35'	75°-85°	9	50'	20'	46'	55'	64'
	86°-95°	10					
	96°-105°	11					

TRANSITION TYPE 3J APPLICATION

INTERSECTING ROADWAYS TRANSITION - TYPE 3J TRANSITION

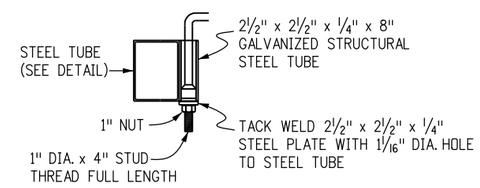

ANCHOR DETAIL

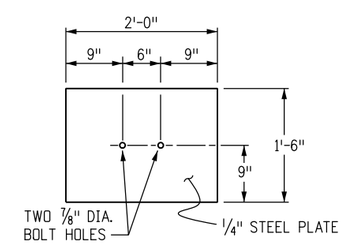

SOIL PLATE

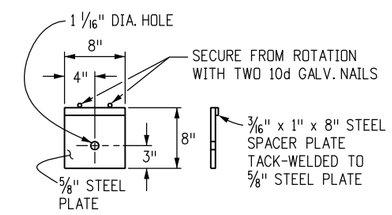

BEARING PLATE FOR STEEL TUBE

Computer File Information		Sheet Revisions	
Creation Date: 07/31/19		Date:	Comments
Designer Initials: JBK	R-X		
Last Modification Date: 03/05/20	R-X		
Detailer Initials: LTA	R-X		
CAD Ver.: MicroStation V8 Scale: Not to Scale Units: English	R-X		

Colorado Department of Transportation
2829 West Howard Place
CDOT HQ, 3rd Floor
Denver, CO 80204
Phone: 303-757-9021 FAX: 303-757-9868
Project Development Branch JBK

MIDWEST GUARDRAIL SYSTEM (MGS) TYPE 3 W-BEAM 31 INCHES

Issued by the Project Development Branch: July 31, 2019

STANDARD PLAN NO.
M-606-1
Standard Sheet No. 12 of 19
Project Sheet Number:

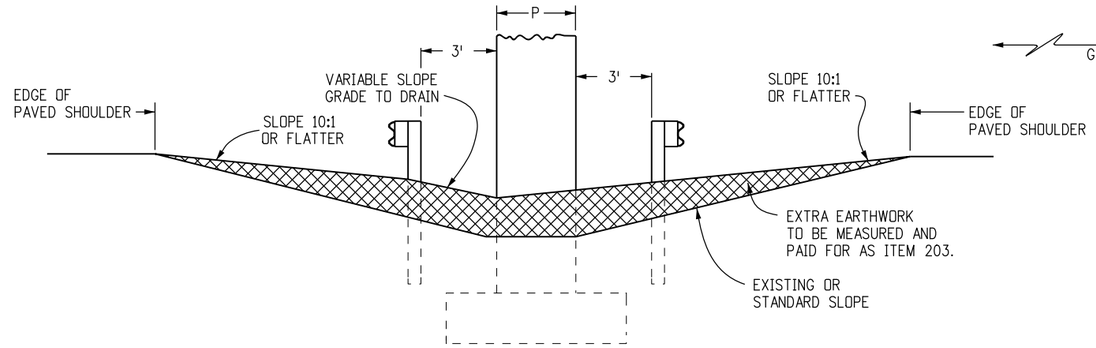

SECTION J-J

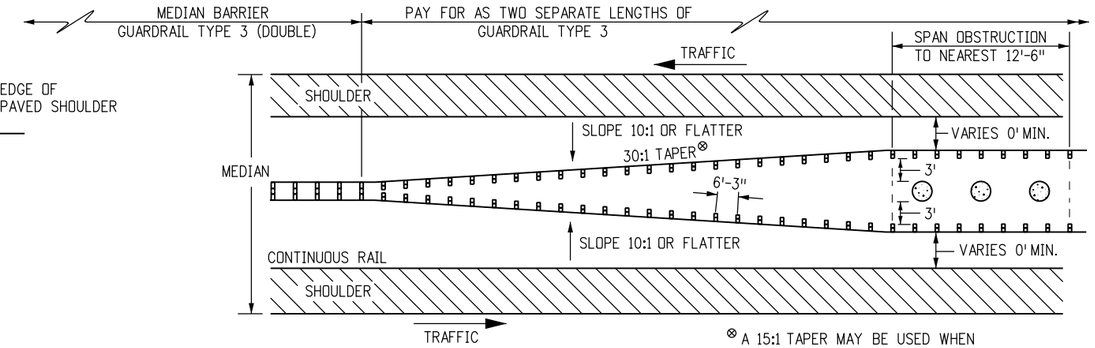

⊗ A 15:1 TAPER MAY BE USED WHEN THE BARRIER ENDS IN THE MEDIAN TERMINAL

OBSTRUCTION IN MEDIAN 30 FT. WIDE OR LESS

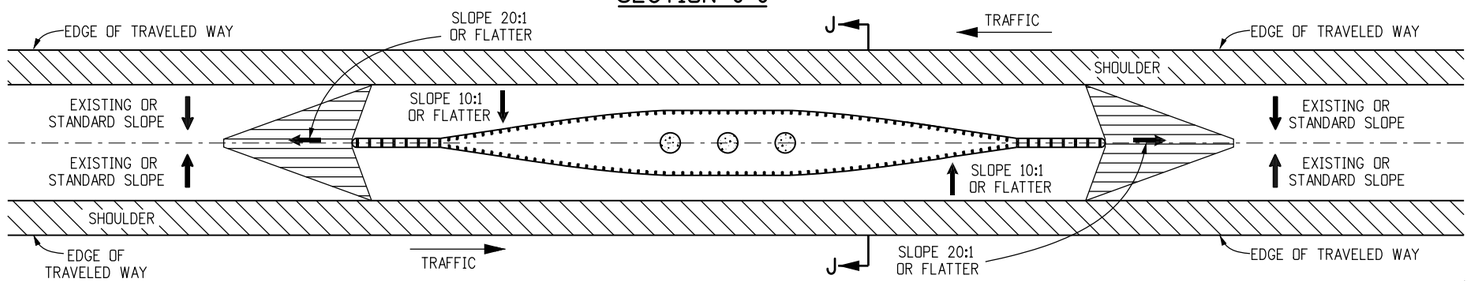

GRADING FOR MEDIAN OBSTRUCTION

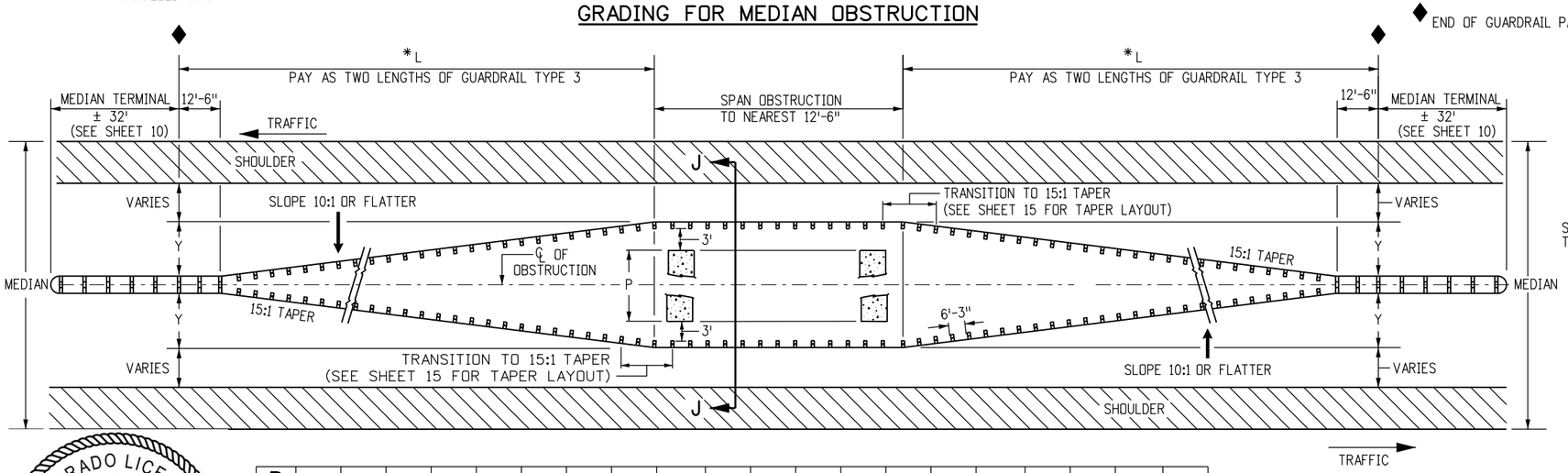

P	1'	2'	3'	4'	5'	6'	7'	8'	9'	10'	11'	12'	13'	14'	15'	16'	17'	18'	19'	20'
Y	4'-1"	4'-7"	5'-1"	5'-7"	6'-1"	6'-7"	7'-1"	7'-7"	8'-1"	8'-7"	9'-1"	9'-7"	10'-1"	10'-7"	11'-1"	11'-7"	12'-1"	12'-7"	13'-1"	13'-7"
L	75'	87'-6"		100'	112'-6"		125'		137'-6"	150'		162'-6"		175'		187'-6"	200'		212'-6"	225'

*L IS MEASURED ALONG FACE OF GUARDRAIL

GUARDRAIL FOR OBSTRUCTION IN MEDIANS WIDER THAN 30 FT.

NOTE: FOR OBSTRUCTIONS (P) THAT ARE WIDER THAN 20 FT. IN MEDIANS USE SHEET 16.

D	F
1'	10'
2'	18'
3'	28'
4'	38'
5'	48'

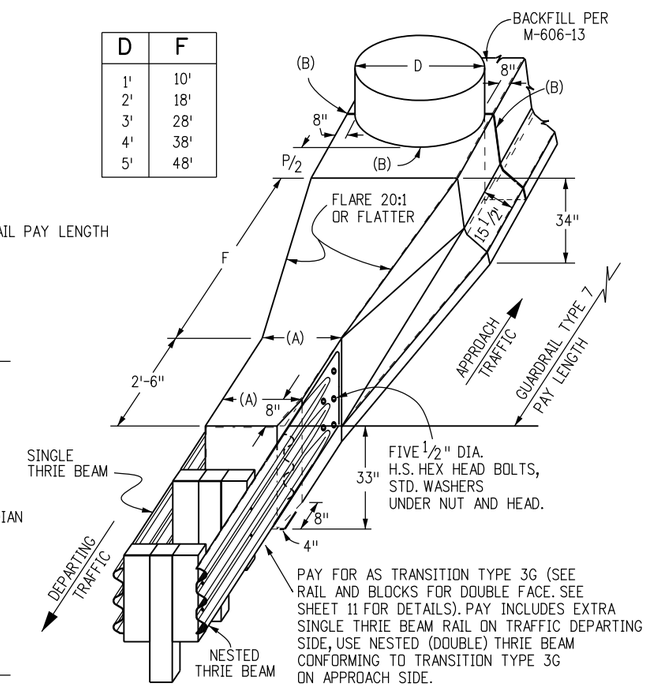

(A). TIMBER POSTS 2 FT., STEEL POSTS 1 FT.-9½IN.

(B). ½ IN. PREFORMED JOINT MATERIAL

NARROW MEDIAN DETAIL

USUALLY LESS THAN 30 FT. WIDE MEDIAN WITH ALL PAVED SURFACE

COLORADO LICENSED
JOSHUA J. PALMER
50188
03/23/20
PROFESSIONAL ENGINEER

OBSTRUCTIONS IN MEDIANS

Computer File Information		Sheet Revisions	
Creation Date: 07/31/19		Date:	Comments
Designer Initials: JBK	(R-X)		
Last Modification Date: 03/05/20	(R-X)		
Detailer Initials: LTA	(R-X)		
CAD Ver.: MicroStation V8 Scale: Not to Scale Units: English	(R-X)		

Colorado Department of Transportation
2829 West Howard Place
CDOT HQ, 3rd Floor
Denver, CO 80204
Phone: 303-757-9021 FAX: 303-757-9868
Project Development Branch JBK

MIDWEST GUARDRAIL SYSTEM (MGS) TYPE 3 W-BEAM 31 INCHES

Issued by the Project Development Branch: July 31, 2019

STANDARD PLAN NO.
M-606-1
Standard Sheet No. 13 of 19
Project Sheet Number:

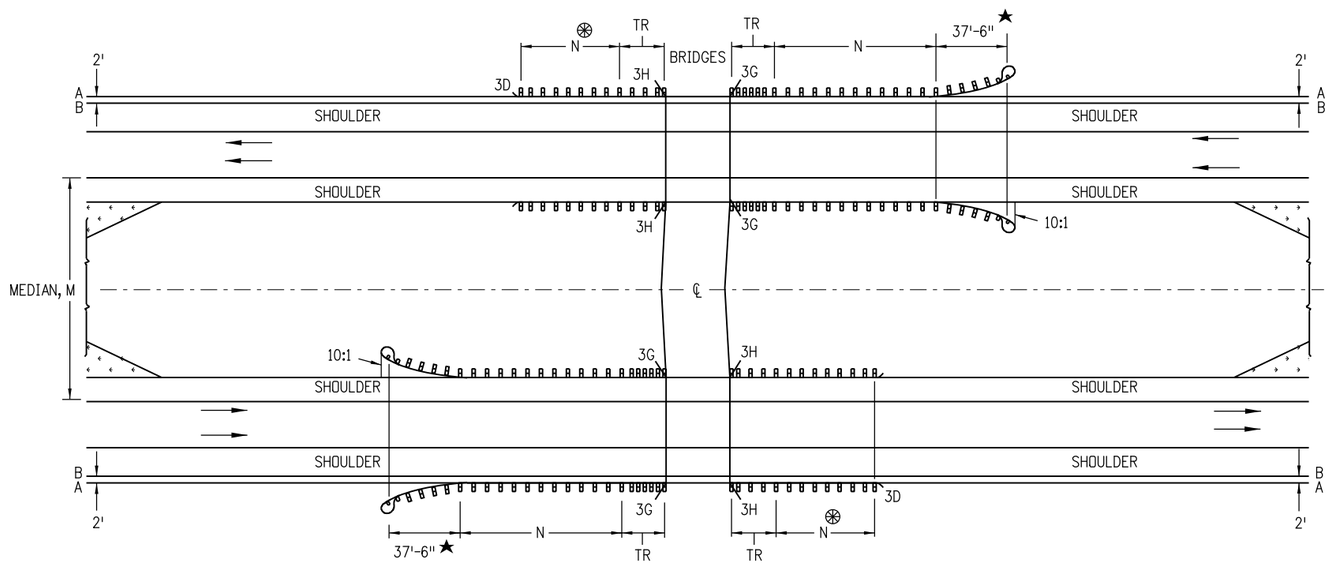

MULTILANE DIVIDED HIGHWAYS FOR STEEP EMBANKMENTS IN MEDIAN

NOTES

1. MEDIAN BARRIERS TANGENT TO THE ROADWAY MAY BE USED WHERE THE SHOULDER SLOPES IN THE MEDIAN ARE STEEP.
2. BARRIER LENGTHS SHALL BE INCREASED TO ACCOUNT FOR STEEP EMBANKMENTS OR OTHER HAZARDS WITHIN CLOSE PROXIMITY OF BRIDGES.

⊛ — DO NOT CONSTRUCT THE TR AND GUARDRAIL ON THE TRAILING BRIDGE ENDS IF SITE CONDITIONS DO NOT WARRANT THE USE OF GUARDRAIL.

N — SHOWN ON PLANS. LENGTH TO SHIELD ALL HAZARDS IS BASED ON GUARDRAIL'S LENGTH OF NEED COMPUTATION. SEE AASHTO ROADWAY DESIGN GUIDE. THE MINIMUM SHALL BE 12 FT. - 6 IN., WHERE SITE CONDITIONS ALLOW. THE TOTAL LENGTH OF NEED WILL INCLUDE THE LENGTH OF TRANSITION, THE LENGTH OF RAIL (N), AND ANY REDIRECTIVE LENGTH IN THE RAIL END TREATMENT.

TR — 25 FEET FOR TRANSITION TYPES 3G AND 3H.

A — EDGE OF 8 FT. OR 10 FT. SHOULDER.

B — EDGE OF 6 FT. OR LESS SHOULDER.

★ — END ANCHORAGE CAN BE FLARED OR NONFLARED.

COLORADO LICENSED
JOSHUA J. PALMER
50188
03/23/20
PROFESSIONAL ENGINEER

Computer File Information		Sheet Revisions	
Creation Date: 07/31/19		Date:	Comments
Designer Initials: JBK	(R-X)		
Last Modification Date: 03/05/20	(R-X)		
Detailer Initials: LTA	(R-X)		
CAD Ver.: MicroStation V8 Scale: Not to Scale Units: English	(R-X)		

Colorado Department of Transportation
2829 West Howard Place
CDOT HQ, 3rd Floor
Denver, CO 80204
Phone: 303-757-9021 FAX: 303-757-9868
Project Development Branch JBK

MIDWEST GUARDRAIL SYSTEM (MGS) TYPE 3 W-BEAM 31 INCHES

Issued by the Project Development Branch: July 31, 2019

STANDARD PLAN NO.
M-606-1
Standard Sheet No. 14 of 19
Project Sheet Number:

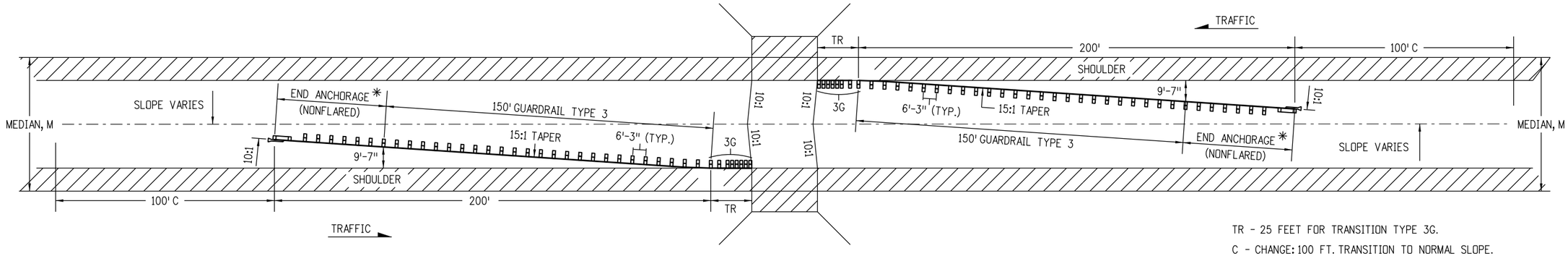

TR - 25 FEET FOR TRANSITION TYPE 3G.

C - CHANGE: 100 FT. TRANSITION TO NORMAL SLOPE.

M - WIDTH OF MEDIAN.

MEDIANS 60 FT. AND OVER WITH 10 FT. OR WIDER SHOULDERS.

* END ANCHORAGE LENGTH AND FLARE RATES VARY BY DEVICE.
SEE MANUFACTUERER/SUPPLIER FOR INSTALLATION REQUIREMENTS.

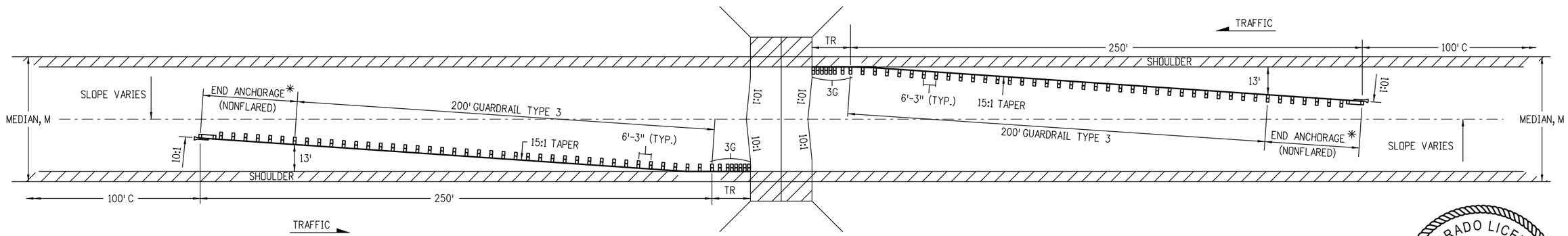

MEDIANS 60 FT. AND OVER WITH 4 to 8 FT. SHOULDERS.

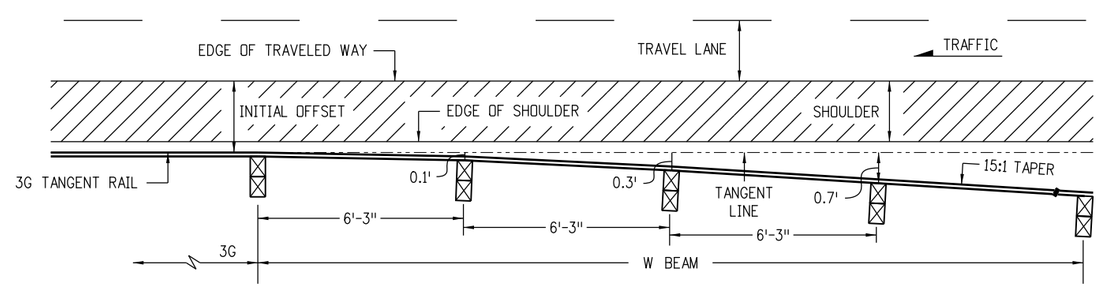

TRANSITION TO TYPICAL 15:1 TAPER

COLORADO LICENSED
JOSHUA J. PALMER
50188
03/23/20
PROFESSIONAL ENGINEER

NOTES

1. GUARDRAIL TRANSITIONS FROM PARALLEL TO ROADWAY SHOULDER AT 3G SEGMENT TO 15:1 TAPER WITHIN 25 FEET BASED ON POST OFFSET DIMENSIONS SHOWN.
2. SEE SHEET 14 FOR THE RIGHT SHOULDER GUARDRAIL LAYOUT.

MULTILANE DIVIDED HIGHWAYS - (DEPRESSED MEDIANS, 60 FT. AND OVER WITH OPEN HAZARDS OR OBSTRUCTIONS)

Computer File Information		Sheet Revisions	
Creation Date: 07/31/19		Date:	Comments
Designer Initials: JBK	(R-X)		
Last Modification Date: 03/05/20	(R-X)		
Detailer Initials: LTA	(R-X)		
CAD Ver.: MicroStation V8 Scale: Not to Scale Units: English	(R-X)		

Colorado Department of Transportation
2829 West Howard Place
CDOT HQ, 3rd Floor
Denver, CO 80204
Phone: 303-757-9021 FAX: 303-757-9868
Project Development Branch JBK

MIDWEST GUARDRAIL SYSTEM (MGS) TYPE 3 W-BEAM 31 INCHES

Issued by the Project Development Branch: July 31, 2019

STANDARD PLAN NO.
M-606-1
Standard Sheet No. 15 of 19
Project Sheet Number:

NOTES

1. GUARDRAIL TRANSITIONS FROM PARALLEL TO ROADWAY SHOULDER AT 3G SEGMENT TO 15:1 TAPER WITHIN 25 FEET BASED ON POST OFFSET DIMENSIONS SHOWN.
2. THE OPTION 1 LAYOUT SHALL BE USED WHEN "Y" EXCEEDS 16 FEET OR WHEN MEDIAN BARRIER IS CONTINUOUS.
3. THE OPTION 2 LAYOUT SHALL BE USED WHEN "Y" IS 16 FEET OR LESS.
4. SEE SHEET 14 FOR RIGHT SHOULDER GUARDRAIL LAYOUT.

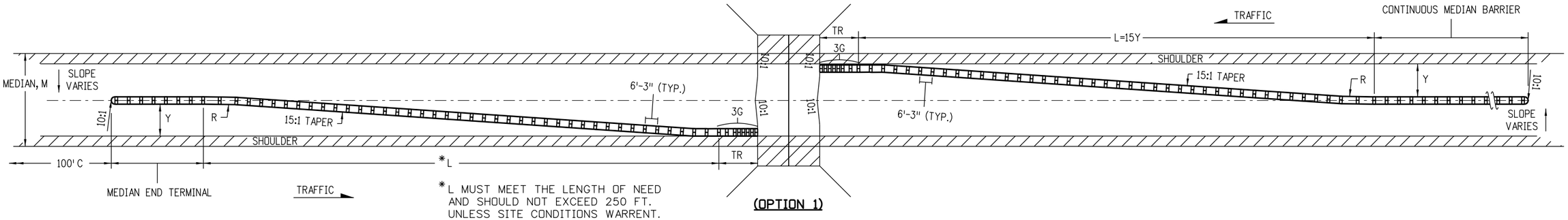

*L MUST MEET THE LENGTH OF NEED AND SHOULD NOT EXCEED 250 FT. UNLESS SITE CONDITIONS WARRENT.

(OPTION 1)

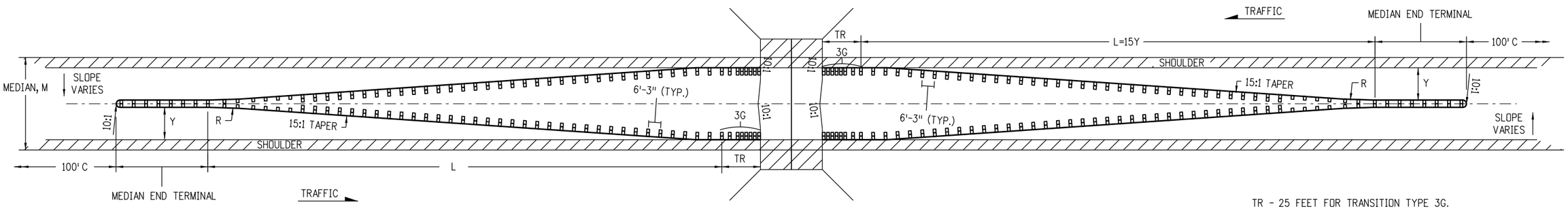

(OPTION 2)

TR - 25 FEET FOR TRANSITION TYPE 3G.
C - CHANGE: 100 FT. TRANSITION TO NORMAL SLOPE.
M - WIDTH OF MEDIAN.
L - TOTAL LENGTH PAID AS GUARDRAIL TYPE 3.
Y - FINAL OFFSET AT END.

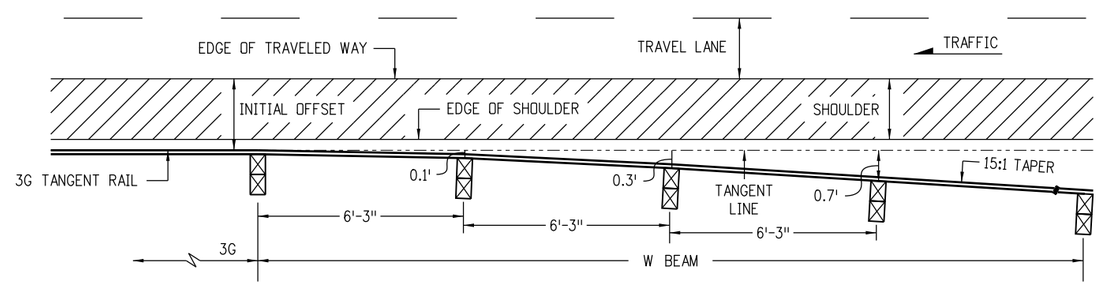

TRANSITION TO TYPICAL 15:1 TAPER

COLORADO LICENSED
JOSHUA J. PALMER
50188
03/23/20
PROFESSIONAL ENGINEER

MULTILANE DIVIDED HIGHWAYS - (DEPRESSED MEDIANS, 21 - 59 FT. WITH OPEN HAZARDS OR OBSTRUCTIONS)

Computer File Information		Sheet Revisions	
Creation Date: 07/31/19		Date:	Comments
Designer Initials: JBK	(R-X)		
Last Modification Date: 03/05/20	(R-X)		
Detailer Initials: LTA	(R-X)		
CAD Ver.: MicroStation V8 Scale: Not to Scale Units: English	(R-X)		

Colorado Department of Transportation
2829 West Howard Place
CDOT HQ, 3rd Floor
Denver, CO 80204
Phone: 303-757-9021 FAX: 303-757-9868
Project Development Branch JBK

MIDWEST GUARDRAIL SYSTEM (MGS) TYPE 3 W-BEAM 31 INCHES

Issued by the Project Development Branch: July 31, 2019

STANDARD PLAN NO.
M-606-1
Standard Sheet No. 16 of 19
Project Sheet Number:

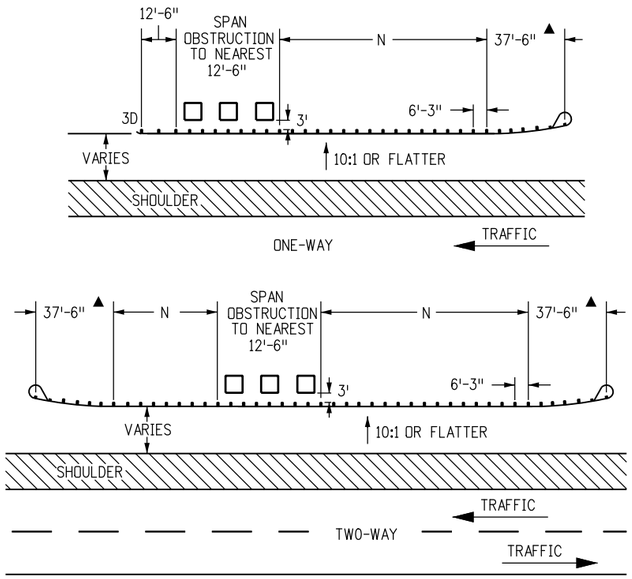

GUARDRAIL FOR ROADSIDE OBSTRUCTIONS

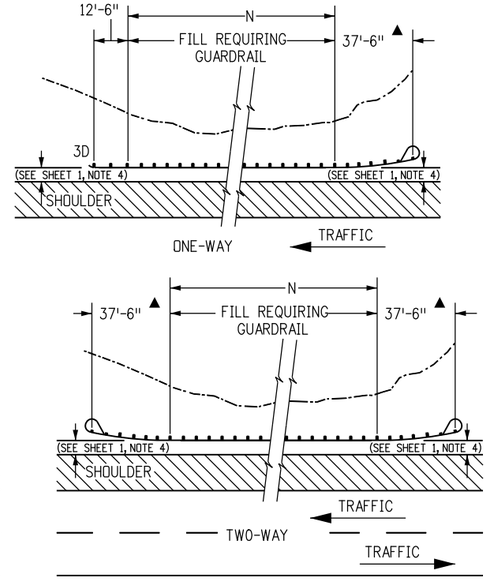

GUARDRAIL FOR ROADSIDE FILL CONSTRUCTION

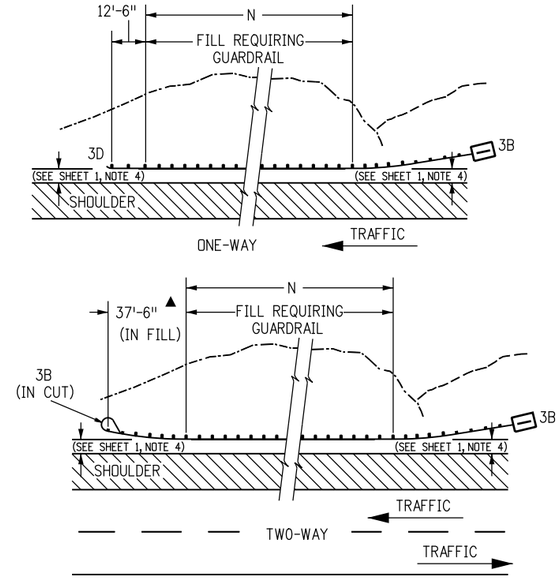

GUARDRAIL FOR ROADSIDE CUT-TO-FILL CONDITION

NOTES

1. A TYPE 3G OR 3H TRANSITION (SEE SHEET 11) SHALL BE USED TO CONNECT THE TYPE 3 W-BEAM TO A TYPE 9 CONCRETE BARRIER (SEE M-606-15) OR TO A TYPE 8 OR 10 BRIDGE RAIL.
2. "TR" SHALL BE 25 FEET FOR THE TRANSITION TYPES 3G AND 3H.
3. THE GUARDRAIL LENGTH DIMENSION "N" IS THE LENGTH AS DETERMINED BY THE LENGTH OF NEED COMPUTATION AND IS SHOWN ON THE PLANS. THE MINIMUM IS 12 FT.-6 IN. WHERE SITE CONDITIONS ALLOW. THE OVERALL REQUIRED LENGTH OF NEED CAN INCLUDE THE LENGTH OF TRANSITION, THE LENGTH OF RAIL (N), AND ANY REDIRECTIVE LENGTH IN THE RAIL END TREATMENT. A TRAVERSABLE SLOPE SHALL BE PROVIDED BEHIND THE TERMINAL TO DIMENSION "N" PRIOR TO THE OBSTRUCTION UNLESS OTHERWISE APPROVED BY THE ENGINEER.

▲ END ANCHORAGE CAN BE FLARED OR NONFLARED

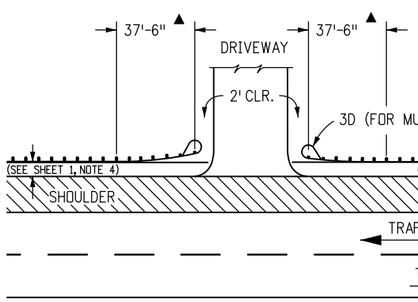

LAYOUT FOR DRIVEWAY APPROACH

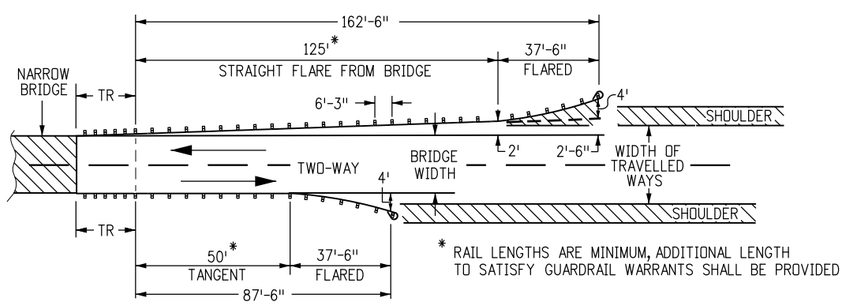

* RAIL LENGTHS ARE MINIMUM, ADDITIONAL LENGTH TO SATISFY GUARDRAIL WARRANTS SHALL BE PROVIDED

2-WAY NARROW APPLICATION

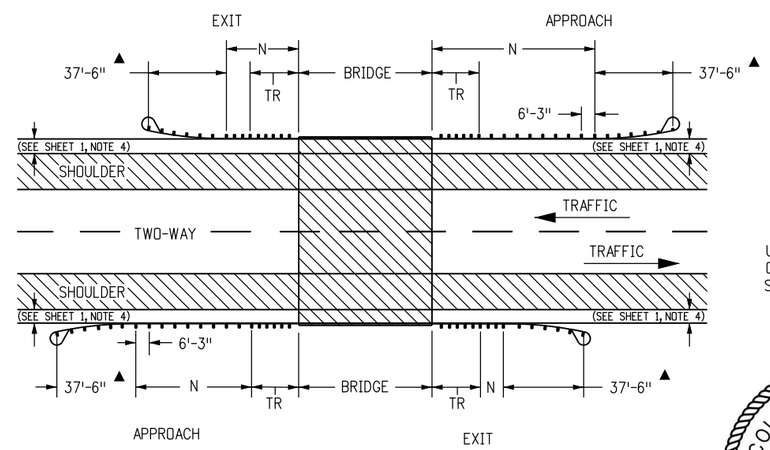

2-WAY NORMAL BRIDGE APPLICATION

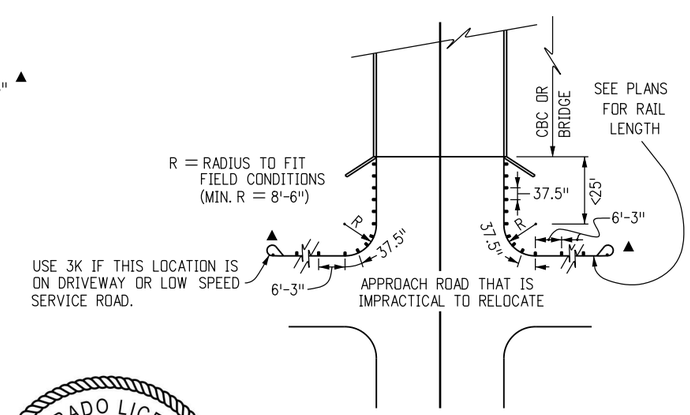

GUARDRAIL TYPE 3 WITH BLOCKED OUT POSTS SPACED AT 3'-1½" FROM STRUCTURE AROUND CURVE.

INTERRUPTED STRUCTURE APPROACH

(USE TYPE 3J ON SHEET 12 WHEN PRACTICAL)

COLORADO LICENSED
JOSHUA J. PALMER
50188
03/23/20
PROFESSIONAL ENGINEER

Computer File Information		Sheet Revisions	
		Date:	Comments
Creation Date: 07/31/19			
Designer Initials: JBK	(R-X)		
Last Modification Date: 03/05/20	(R-X)		
Detailer Initials: LTA	(R-X)		
CAD Ver.: MicroStation V8 Scale: Not to Scale Units: English	(R-X)		

Colorado Department of Transportation
2829 West Howard Place
CDOT HQ, 3rd Floor
Denver, CO 80204
Phone: 303-757-9021 FAX: 303-757-9868
Project Development Branch JBK

MIDWEST GUARDRAIL SYSTEM (MGS) TYPE 3 W-BEAM 31 INCHES

Issued by the Project Development Branch: July 31, 2019

STANDARD PLAN NO.
M-606-1
Standard Sheet No. 17 of 19
Project Sheet Number:

NOTES

1. POSTS 1, 2, 9, and 10 MAY BE TIMBER OR STEEL.
2. THE NUMBER OF OMITTED POSTS IS DEPENDENT ON THE LENGTH OF THE GAP.
3. ONE POST MAY BE OMITTED WITHOUT ANY MODIFICATION TO THE GUARDRAIL RUN.

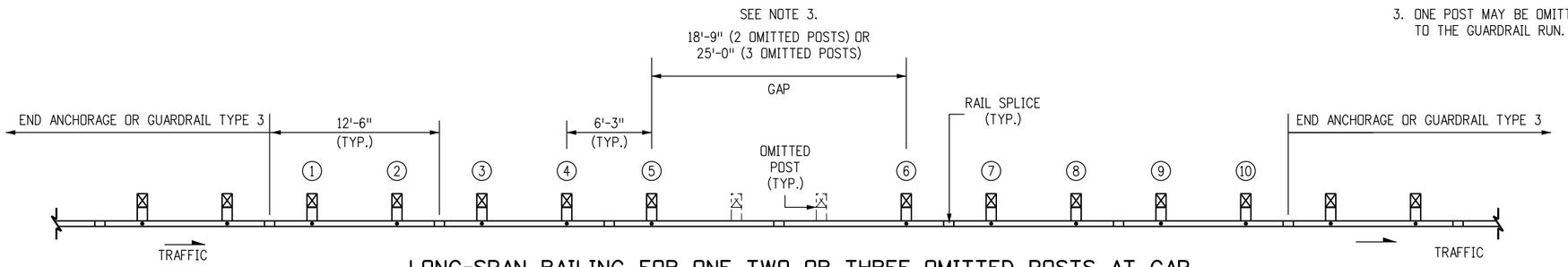

LONG-SPAN RAILING FOR ONE, TWO, OR THREE OMITTED POSTS AT GAP

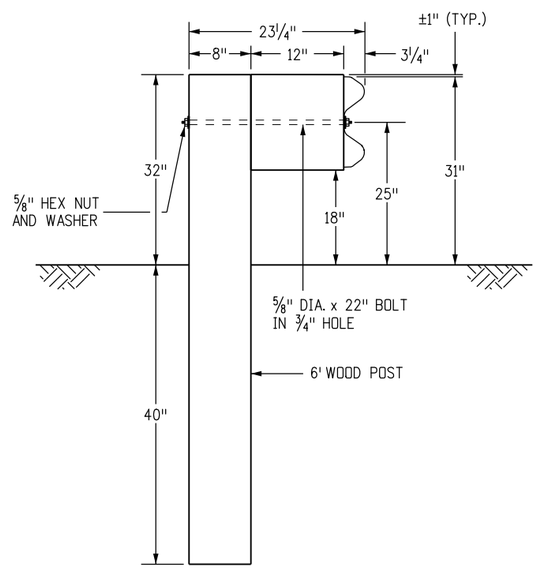

TIMBER POST

POSTS 1-2 AND 9-10
(SEE NOTE 1)

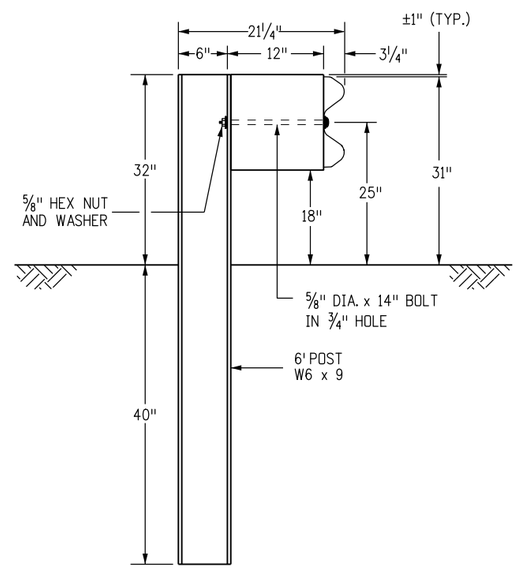

STEEL POST

POSTS 1-2 AND 9-10
(SEE NOTE 1)

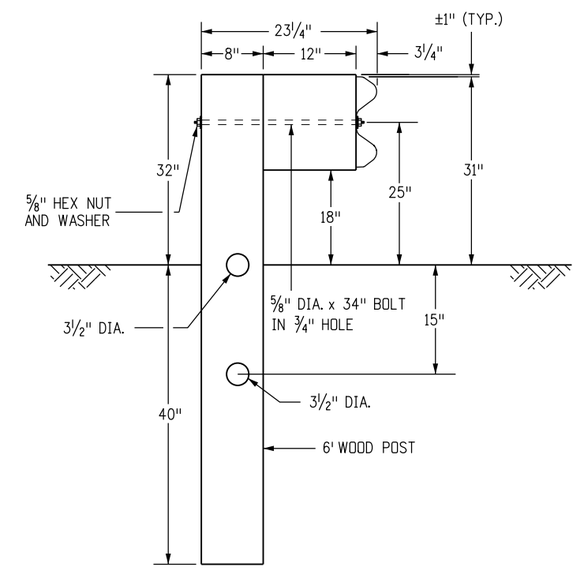

BREAKWAY TIMBER POST

POSTS 3 - 8

COLORADO LICENSED
JOSHUA J. PALMER
50188
03/23/20
PROFESSIONAL ENGINEER

Computer File Information		Sheet Revisions	
Creation Date: 07/31/19		Date:	Comments
Designer Initials: JBK	R-X		
Last Modification Date: 03/05/20	R-X		
Detailer Initials: LTA	R-X		
CAD Ver.: MicroStation V8 Scale: Not to Scale Units: English	R-X		

Colorado Department of Transportation
2829 West Howard Place
CDOT HQ, 3rd Floor
Denver, CO 80204
Phone: 303-757-9021 FAX: 303-757-9868
Project Development Branch JBK

MIDWEST
GUARDRAIL SYSTEM (MGS)
TYPE 3 W-BEAM 31 INCHES

Issued by the Project Development Branch: July 31, 2019

STANDARD PLAN NO.
M-606-1
Standard Sheet No. 18 of 19
Project Sheet Number:

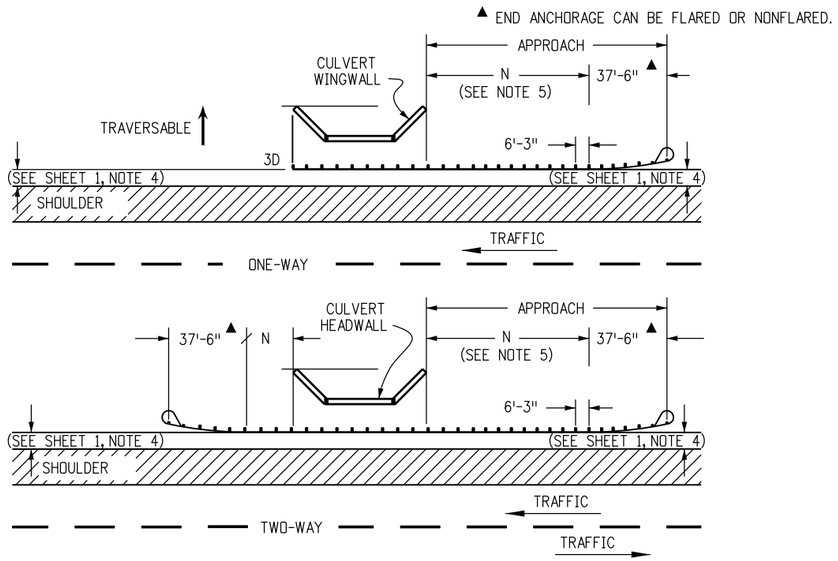

GUARDRAIL FOR CULVERTS

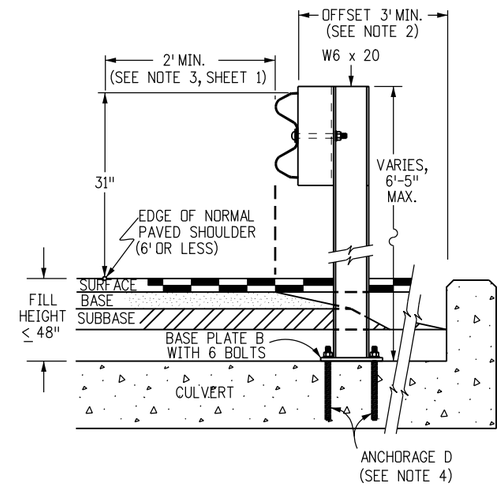

INSIDE MOUNT ON CBC

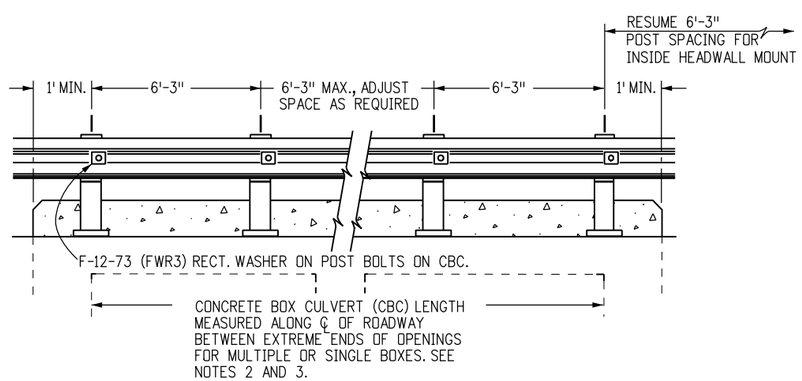

RAIL PLACEMENT FOR INSIDE MOUNT

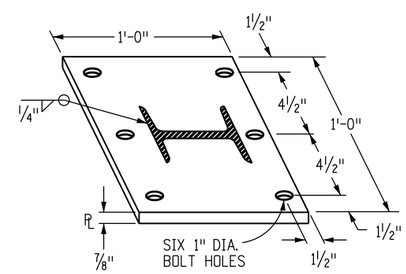

BASE PLATE B

(FOR INSIDE MOUNT)

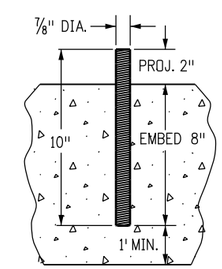

ANCHORAGE D

(FOR INSIDE MOUNT)

NOTES

1. LOCATION AND LENGTH OF MEDIAN GUARDRAIL APPROACHES TO CULVERTS WITH FULL HEADWALL AND WINGWALLS SHALL BE AS SHOWN FOR BRIDGES ON SHEET 15. THE GUARDRAIL TYPE 3 SHALL CONTINUE ACROSS THE CULVERT AS SHOWN ON THIS SHEET.

2. RIGHT SHOULDER BOX CULVERT TREATMENT IS SHOWN ON THIS SHEET FOR CULVERTS 20 FT. OR LESS IN LENGTH.

3. CONSTRUCTION AND PAYMENT FOR FILL HEIGHTS SHALL BE INCLUDED IN THE COST OF THE GUARDRAIL TYPE 3.

4. ANCHORAGE D: SIX BOLTS FOR BASE PLATE "B" WITH INSIDE MOUNT. THE BOLTS SHALL BE 7/8 IN. DIA X 10 IN. HIGH STRENGTH RODS THREADED FULL LENGTH AND ALL GALVANIZED. RODS SHALL BE CAST-IN-PLACE FOR NEW STRUCTURES. FOR EXISTING STRUCTURES, THE RODS SHALL BE INSTALLED IN 1-1/4 IN. DIA HOLES WITH NON-SHRINK GROUT OR EPOXY CONFORMING TO ASTM C 881. IF THE THICKNESS OF A CULVERT'S TOP PANEL REQUIRES BOLTS TO BE LESS THAN 10 IN. HIGH, THE BOLTS SHALL BE APPROVED BY THE ENGINEER.

5. THE GUARDRAIL LENGTH DIMENSION "N" IS THE LENGTH AS DETERMINED BY THE LENGTH OF NEED COMPUTATION AND IS SHOWN ON THE PLANS. THE MINIMUM IS 12 FT.-6 IN. WHERE SITE CONDITIONS ALLOW. THE OVERALL REQUIRED LENGTH OF NEED CAN INCLUDE THE LENGTH OF TRANSITION, THE LENGTH OF RAIL (N), AND ANY REDIRECTIVE LENGTH IN THE RAIL END TREATMENT.

6. ALL POSTS, BASE PLATES, AND ANCHOR BOLTS SHALL BE FABRICATED FROM ASTM A 36 STEEL. THE ABOVE MATERIAL, W-BEAM, AND ALL ANCHOR BOLTS AND MISCELLANEOUS BOLTS, NUTS, AND WASHERS SHALL BE GALVANIZED AFTER FABRICATION INACCORDANCE WITH SECTION 509. CONCRETE, REINFORCING STEEL, AND STRUCTURAL STEEL ELEMENTS SHALL BE IN ACCORDANCE WITH SECTIONS 601, 602, AND 509, RESPECTIVELY.

7. POST ANCHORS, ENCASED IN CONCRETE, SHALL BE ASTM A 36 STEEL, AND NEED NOT BE GALVANIZED.

8. PRIOR TO INSTALLATION OF GUARDRAIL ON CULVERTS, THREE SETS OF WORKING DRAWINGS WHICH COMPLY WITH THE REQUIREMENTS OF SECTION 105 SHALL BE SUBMITTED TO THE ENGINEER FOR INFORMATION ONLY.

Computer File Information		Sheet Revisions	
Creation Date: 07/31/19		Date:	Comments
Designer Initials: JBK	R-X		
Last Modification Date: 03/05/20	R-X		
Detailer Initials: LTA	R-X		
CAD Ver.: MicroStation V8 Scale: Not to Scale Units: English	R-X		

Colorado Department of Transportation
2829 West Howard Place
CDOT HQ, 3rd Floor
Denver, CO 80204
Phone: 303-757-9021 FAX: 303-757-9868
Project Development Branch JBK

MIDWEST GUARDRAIL SYSTEM (MGS) TYPE 3 W-BEAM 31 INCHES

Issued by the Project Development Branch: July 31, 2019

STANDARD PLAN NO.
M-606-1
Standard Sheet No. 19 of 19
Project Sheet Number:

GENERAL NOTES

1. RUMBLE STRIPS SHALL BE OMITTED AT TURN AND AUXILIARY LANES, ROAD APPROACHES, RESIDENCES, 250 FT. BEFORE ROAD INTERSECTIONS, AND OTHER INTERRUPTIONS AS DIRECTED BY THE ENGINEER.
2. RUMBLE STRIPS MAY BE INSTALLED BY GRINDING, ROLLING, OR FORMING ON CONCRETE PAVEMENT, AND BY GRINDING ONLY ON HMA PAVEMENT. RUMBLE STRIP WIDTH SHALL BE 12 IN. FOR GRIND-IN AND 18 IN. FOR FORMED OR ROLLED.
3. MINIMIZE THE DISTANCE BETWEEN RUMBLE STRIP AND EDGE LINE ON CONCRETE PAVEMENTS WITH 14 FT. WIDE SLABS.
4. BEGIN RUMBLE STRIPS ON THE OUTSIDE EDGE OF THE TRAVEL LANE EDGE LINE.
5. DO NOT INSTALL RUMBLE STRIPS ON SHOULDERS LESS THAN 6 FT. WIDE WHEN GUARDRAIL IS PLACED ALONG THE EDGE OF THE SHOULDER.
6. APPLY THE 60 FT. GAP PATTERN WHEN RUMBLE STRIPS (GRIND-IN) ARE INSTALLED IN CONCRETE PAVEMENT.

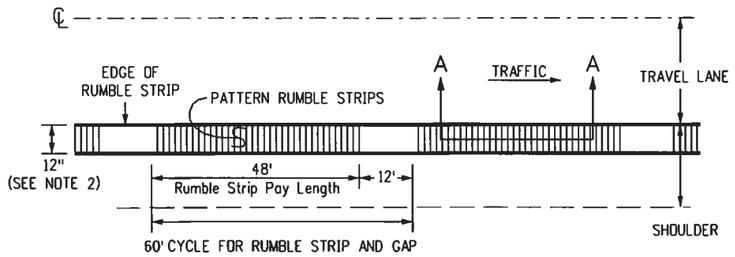

INTERMITTENT RUMBLE STRIP
TWO-LANE ROADWAY (HMA)

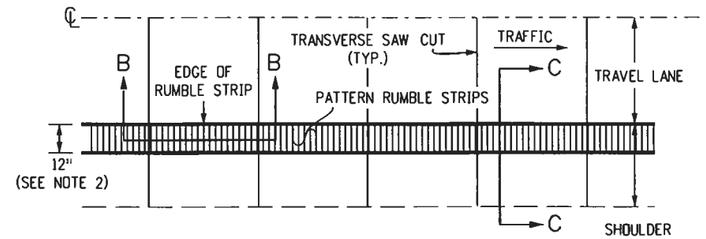

CONTINUOUS RUMBLE STRIP
TWO-LANE ROADWAY (CONCRETE)

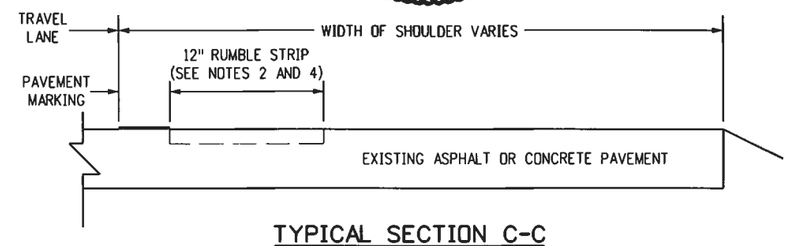

TYPICAL SECTION C-C

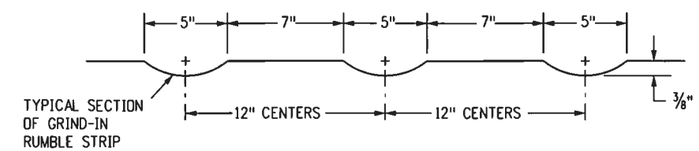

TYPICAL SECTIONS A-A AND B-B
FOR GRIND-IN RUMBLE STRIP
ON EXISTING HMA OR CONCRETE PAVEMENT

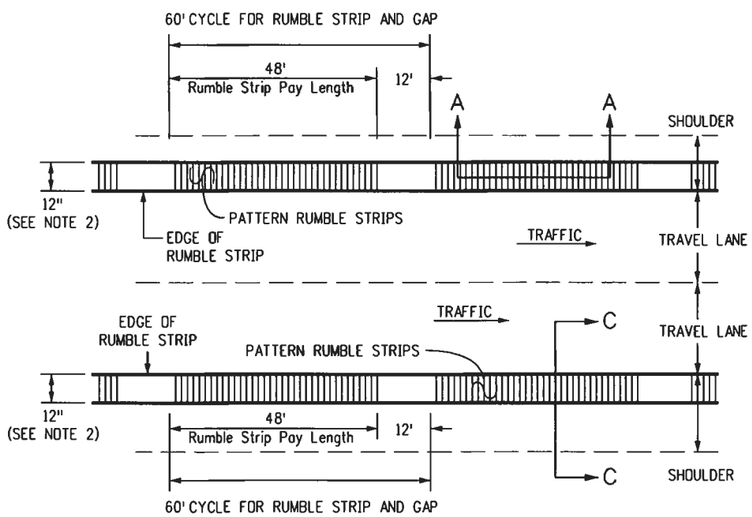

INTERMITTENT RUMBLE STRIP
FOUR-LANE DIVIDED ROADWAY (HMA)

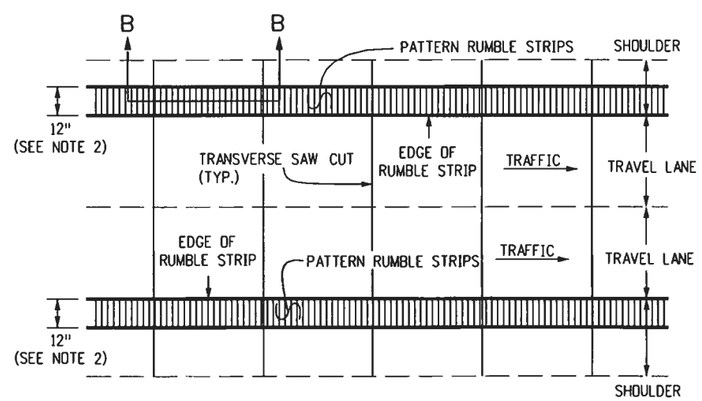

CONTINUOUS RUMBLE STRIP
FOUR-LANE DIVIDED ROADWAY (CONCRETE)

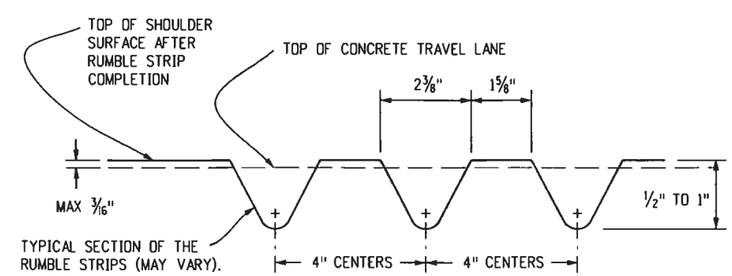

TYPICAL SECTION B-B
FOR FORMED OR ROLLED ON CONCRETE PAVEMENTS ONLY

Computer File Information		Sheet Revisions	
Creation Date: 07/31/19		Date:	Comments
Designer Initials: JBK	(R-X)		
Last Modification Date: 07/31/19	(R-X)		
Detailer Initials: LTA	(R-X)		
CAD Ver.: MicroStotion V8 Scale: Not to Scole Units: English	(R-X)		

Colorado Department of Transportation
2829 West Howard Place
CDOT HQ, 3rd Floor
Denver, CO 80204
Phone: 303-757-9021 FAX: 303-757-9868
Project Development Branch JBK

RUMBLE STRIPS

Issued by the Project Development Branch: July 31, 2019

STANDARD PLAN NO.
M-614-1
Standard Sheet No. 1 of 3
Project Sheet Number:

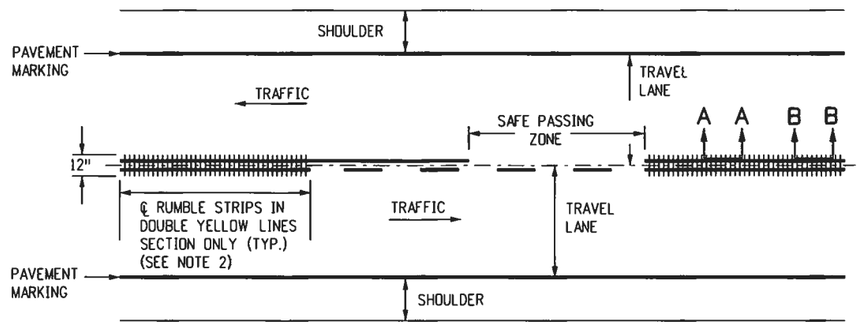

TWO LANE HIGHWAY (HMA AND CONCRETE)
CONTINUOUS CENTER LINE RUMBLE STRIPS

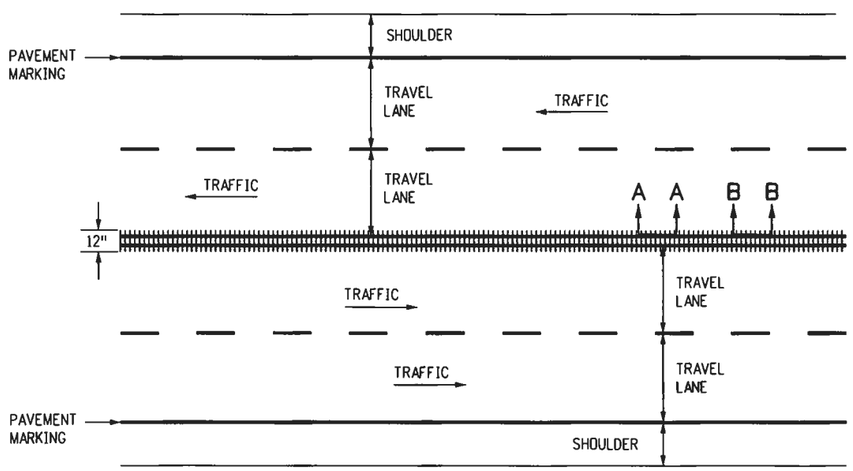

FOUR LANE UNDIVIDED HIGHWAY (HMA AND CONCRETE)
CONTINUOUS CENTER LINE RUMBLE STRIPS

NOTES

1. RUMBLE STRIP WIDTH SHALL BE 12 IN. FOR GRIND-IN, FORMED, OR ROLLED.
2. CENTERLINE RUMBLE STRIPS MAY BE CONTINUOUS THROUGH PASSING ZONES AS DETERMINED BY THE ENGINEER AND SHOWN ON THE PLANS.

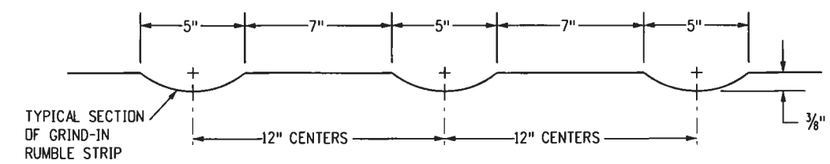

TYPICAL SECTIONS A-A AND B-B

FOR GRIND-IN RUMBLE STRIP
ON EXISTING ASPHALT OR CONCRETE PAVEMENT

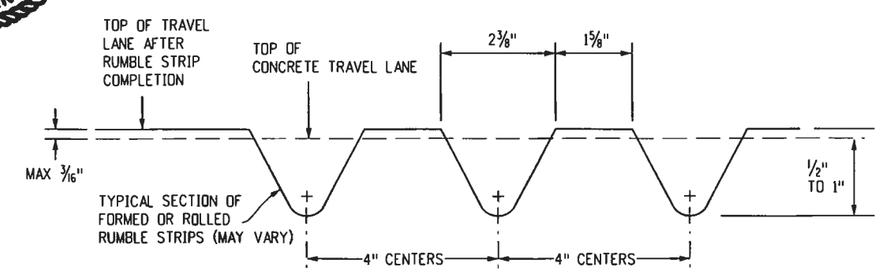

TYPICAL SECTION B-B

FOR FORMED OR ROLLED ON CONCRETE PAVEMENTS ONLY

DETAILS FOR CENTER LINE RUMBLE STRIPS

Computer File Information		Sheet Revisions	
Creation Date: 07/31/19		Date:	Comments
Designer Initials: JBK	R-X		
Last Modification Date: 07/31/19	R-X		
Detailer Initials: LTA	R-X		
CAD Ver.: MicroStation V8 Scale: Not to Scale Units: English	R-X		

Colorado Department of Transportation
2829 West Howard Place
CDOT HQ, 3rd Floor
Denver, CO 80204
Phone: 303-757-9021 FAX: 303-757-9868
Engineering and Standards Services JBK

RUMBLE STRIPS

Issued by Engineering and Standards Services: July 31, 2019

STANDARD PLAN NO.
M-614-1
Standard Sheet No. 2 of 3
Project Sheet Number:

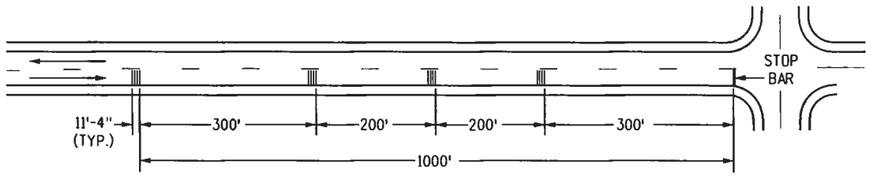

STOP SIGN APPROACH

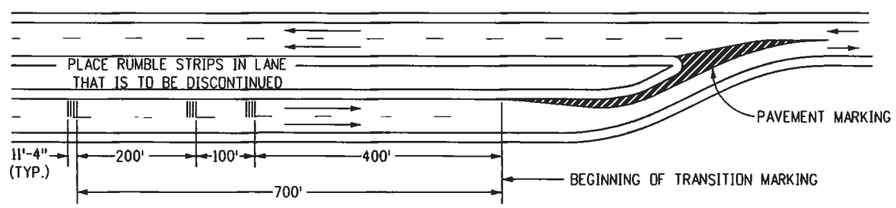

LANE REDUCTION TRANSITION

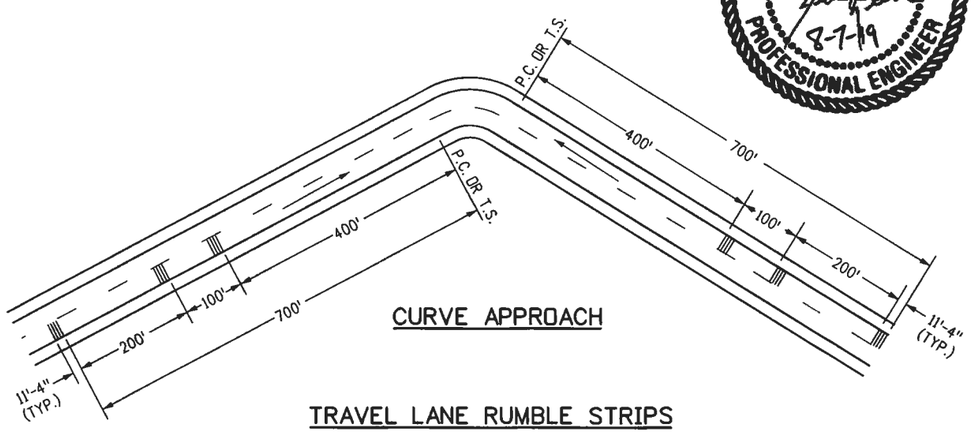

CURVE APPROACH

TRAVEL LANE RUMBLE STRIPS

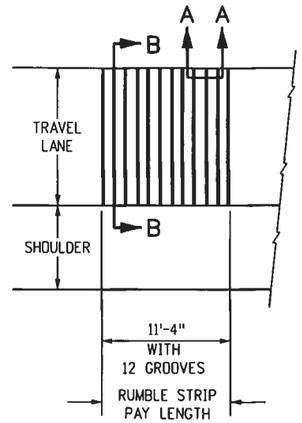

TYPICAL RUMBLE STRIP CLUSTER

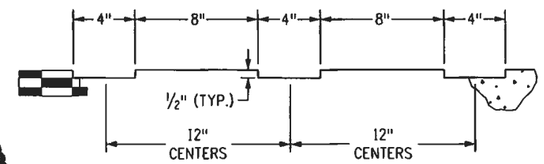

RUMBLE STRIP GROOVES IN HMA OR CONCRETE SURFACE
12 STRIPS PER CLUSTER TYPICAL

SECTION
A-A
(GROOVED)

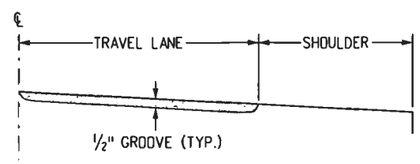

SECTION
B-B
(GROOVED)

PERMANENT GROOVED RUMBLE STRIPS

NOTES

1. GROOVED RUMBLE STRIP SKEW OR CLUSTER SPACING SHALL BE MODIFIED TO AVOID LOCATING A GROOVE ON A CONCRETE PAVEMENT TRANSVERSE JOINT.
2. PERMANENT TRAVEL LANE RUMBLE STRIPS SHALL BE THE GROOVE DESIGN, AND MAY BE CUT IN EXISTING, NEW HMA, OR CONCRETE PAVEMENT. THE GROOVES MAY BE CUT BY SAWING, GRINDING, OR OTHER METHOD AS APPROVED.
3. TEMPORARY RUMBLE STRIPS SHOULD NORMALLY BE THE RAISED DESIGN. THEY MAY BE GROOVES IF LOCATED IN A PAVEMENT THAT WILL BE REMOVED OR COVERED WITH A PAVEMENT COURSE BEFORE COMPLETION OF THE PROJECT. TYPICAL USES OF TEMPORARY RUMBLE STRIPS ARE FOR LANE CLOSURES OR ALIGNMENT CHANGES IN CONSTRUCTION ZONES.
4. THE HMA (RAISED RUMBLE STRIPS) SHALL BE PLACED ON A CLEAN, TACK COATED TREATED PAVEMENT IN ⅜ IN. HIGH FORMS. THE FORMS SHALL BE REMOVED AND THE ASPHALT COMPACTED BY ROLLING ALONG THE STRIPS. EPOXY MORTAR SHALL BE FORMED, TROWELED, AND LEVELED WITH A ROLLER AND THE TOP EDGES ROUNDED, THERMOPLASTIC STRIPS SHALL BE APPLIED BY THE EXTRUSION PROCESS. PREFORMED PLASTIC SHALL BE INSTALLED IN CONFORMANCE WITH THE INSTRUCTIONS OF THE MANUFACTURER.

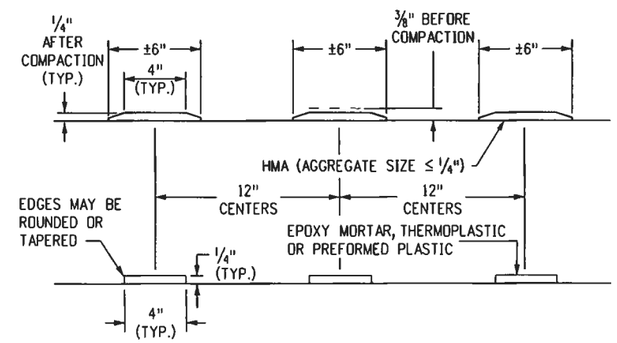

PREFORMED PLASTIC STRIPS SHALL BE SPACED ON 12 IN. CENTERS AND MAY VARY FROM THE 4 IN. TYPICAL WIDTH.
12 STRIPS PER CLUSTER TYPICAL

SECTION
A-A
(RAISED)

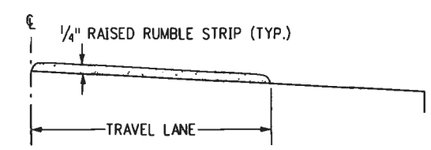

SECTION
B-B
(RAISED)

TEMPORARY RAISED RUMBLE STRIPS

COLORADO LICENSED
JOSHUA B. KEVER
44328
8-7-19
PROFESSIONAL ENGINEER

Computer File Information		Sheet Revisions	
Creation Date: 07/31/19		Date:	Comments
Designer Initials: JBK	(R-X)		
Last Modification Date: 07/31/19	(R-X)		
Detailer Initials: LTA	(R-X)		
CAD Ver.: MicroStation V8 Scale: Not to Scale Units: English	(R-X)		

Colorado Department of Transportation
2829 West Howard Place
CDOT HQ, 3rd Floor
Denver, CO 80204
Phone: 303-757-9021 FAX: 303-757-9868
Engineering and Standards Services JBK

RUMBLE STRIPS

Issued by Engineering and Standards Services: July 31, 2019

STANDARD PLAN NO.
M-614-1
Standard Sheet No. 3 of 3
Project Sheet Number:

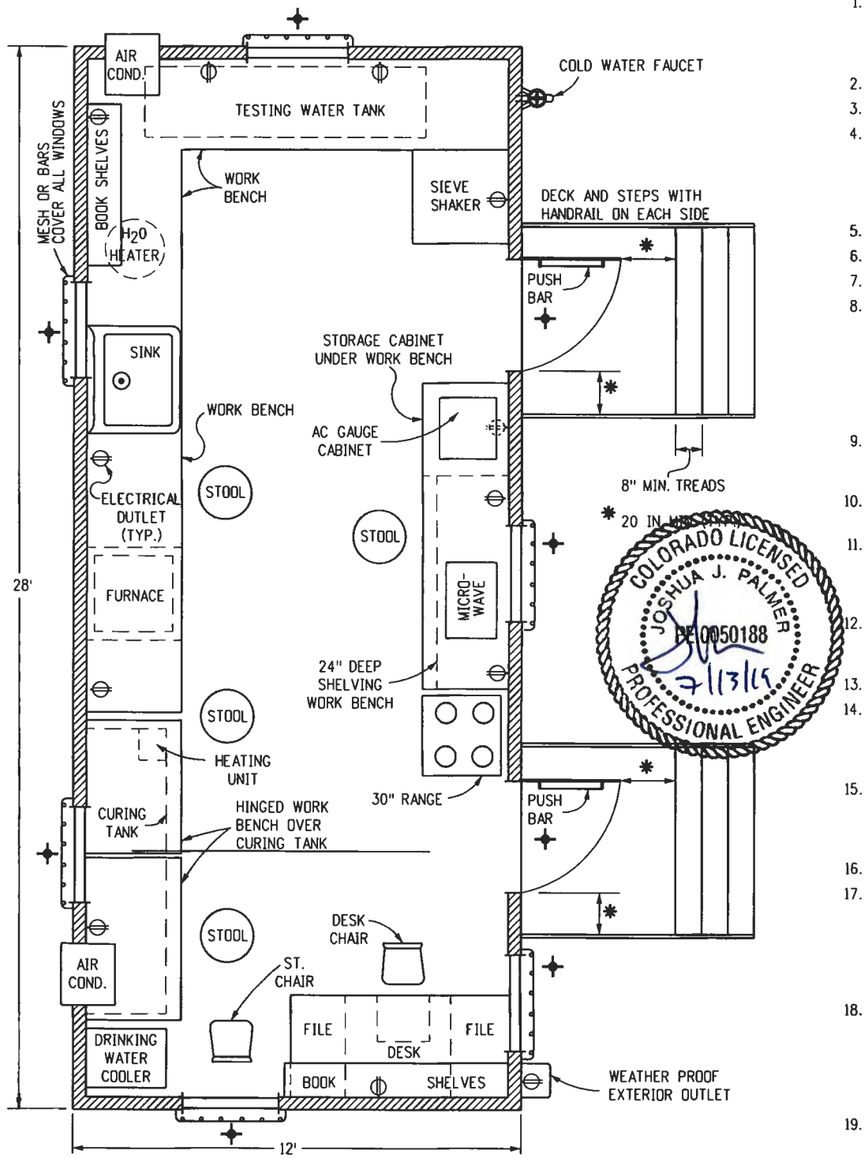

FLOOR PLAN

COLORADO LICENSED
JOSHUA J. PALMER
PE 0050188
7/13/19
PROFESSIONAL ENGINEER

GENERAL NOTES

1. CLASS 2 FIELD LABORATORIES SHALL CONSIST OF A WEATHERPROOF, INSULATED, TEMPORARY OFFICE TYPE TRAILER, CONSTRUCTED TO THE UNIFORM BUILDING CODE SERIES, WITH FLOOR PLAN AND EQUIPMENT LAYOUT SIMILAR TO THE DRAWING ON THIS SHEET. IT SHALL MEET OR EXCEED THE FOLLOWING REQUIREMENTS.
2. **DIMENSIONS:** 28 FT. LONG x 12 FT. WIDE OUTSIDE, 7 FT.-6 IN. HEIGHT INSIDE.
3. **WINDOWS:** SIX, 30 IN x 27 IN., CAPABLE OF OPENING AND LOCKING.
4. **DOORS:** TWO, EQUIPPED WITH DEADBOLT LOCKS, 36 IN. x 80 IN., INSULATED STEEL WITH SMALL CLEAR GLASS WINDOW. EQUIPPED WITH HORIZONTAL PUSH BAR, HEAVY DUTY DOOR CLOSER, AND PULL HANDLE MOUNTED ABOVE PUSH BAR. EACH DOOR SHALL HAVE A SET OF STEPS WITH DECK, AND HANDRAILS. THE STEPS SHALL BE PLACED SO THE DECK CAN BE ACCESSED EITHER FROM THE SIDE OR FROM THE FRONT. THE DECK, RAILS, AND STEPS SHALL MEET OSHA REQUIREMENTS.
5. **FLOOR:** ADEQUATE INSULATION UNDER THE FLOOR. FLOOR COVERING SHALL BE SKID RESISTANT.
6. **HEATING:** FURNACE, 55,000 BTU, FORCED AIR TYPE.
7. **AIR CONDITIONING:** TWO, 8,300 BTU MINIMUM.
8. **ELECTRICAL:** WORK SHALL CONFORM TO THE NATIONAL ELECTRICAL CODE FOR 110/220 VOLTS, 60 HZ, APPLICATIONS AND PROVIDE RELIABLE UNIFORM POWER TO PROPERLY OPERATE ALL FIELD LABORATORY EQUIPMENT. ALL TRAILERS CONSTRUCTED AFTER JULY 1, 2006 SHALL HAVE AN APPROPRIATELY SIZED CIRCUIT BREAKER TO HANDLE THE LOAD OF ALL LABORATORY AND ENVIRONMENTAL EQUIPMENT OPERATING AT ONE TIME. PROVIDE A SEPARATE ELECTRICAL CIRCUIT TO SUPPLY POWER TO THE ASPHALT CONTENT GAUGE AND THE OUTLET IN THE STORAGE CABINET UNDER THE WORK BENCH.
9. **LIGHTING:** ADEQUATE FLUORESCENT LIGHTING DIRECTLY OVER ALL WORK BENCH AND DESK AREAS. THERE SHALL BE ONE 110 VOLT EXTERIOR PORCH LIGHT FIXTURE WITHIN 2 FT. OF EACH EXTERIOR DOOR.
10. **VENT FAN:** ONE, GENERAL VENTILATION WITH 800 CFM CAPACITY AND 2 SPEED SWITCH. MOUNTED IN THE ROOF OR AT TOP OF WALL NEAR THE RANGE.
11. **FURNITURE:** TWO, TWO-DRAWER, LEGAL SIZE FILE CABINETS BUILT INTO DESK AREA. DESK SHALL BE BUILT-IN WITH ONE CENTER DRAWER. ONE DESK CHAIR WITH ROLLERS, ONE STRAIGHT CHAIR, AND FOUR STOOLS FOR WORK AREA WITH HEIGHT COMPATIBLE WITH WORK BENCHES. ALL CHAIRS SHALL BE ERGONOMICALLY BUILT.
12. **BOOK SHELVES:** A MINIMUM OF 10 LINEAR FT. LONG BUILT OVER DESK AREA AND 8 LINEAR FT. LONG BUILT OVER WORK BENCH. ALL SHELVES SHALL BE 10 IN. DEEP. TOP SHELF SHALL BE AT LEAST 14 IN. BELOW CEILING.
13. **WORK BENCHES:** 30 IN. DEEP x 36 IN. HIGH WITH A DURABLE WORKING SURFACE SUCH AS FORMICA.
14. **STORAGE CABINETS:** TWO, ONE BUILT-IN UNDER THE WORK BENCH WITH A 28 IN. x 28 IN. LOCK EQUIPPED DOOR, WITH ELECTRICAL OUTLET INSIDE. ONE REMOVABLE, WITH OPEN BOTTOM, LOCK EQUIPPED TO SECURE CABINET TO TOP OF WORK BENCH, AND LARGE ENOUGH TO COVER A 22 IN. x 18 IN. x 18 IN. HIGH ASPHALT CONTENT (AC) GAUGE.
15. **SINK:** ONE, SINGLE TUB, STAINLESS STEEL, 25 IN. x 22 IN. x 6½ IN. EQUIPPED WITH SPRAY NOZZLE, ONE COMBINATION (MIXING) HOT AND COLD WATER FAUCET AND ONE SINGLE COLD WATER FAUCET. ALL FAUCETS SHALL BE EQUIPPED WITH STANDARD HOSE THREAD SPIGOTS. DRAIN SHALL HAVE NO TRAP.
16. **DRINKING WATER SUPPLY:** DRINKING WATER DISPENSED FROM AN ACCEPTABLE WATER COOLING DEVICE.
17. **TESTING WATER SUPPLY:** 300 GALLON WATER CAPACITY, IN ONE OR MORE TANKS LOCATED ALONG THE TRAILER END OR ALONG BOTH SIDES OF THE TRAILER END, VENTED WITH MEANS OF DETERMINING WATER LEVEL, WITH ONE PRESSURE PUMP, MINIMUM 30 PSI DELIVERY PRESSURE. TEN GALLON ELECTRIC WATER HEATER. ONE COLD WATER FAUCET WITH BACK FLOW PREVENTER LOCATED ON OUTSIDE OF TRAILER. WATER PIPES SHALL BE LOCATED SO THEY ARE UNEXPOSED AND PROTECTED FROM DAMAGE. WATER SHALL BE SUPPLIED BY THE CONTRACTOR. USE POTABLE WATER ONLY.
18. **TELEPHONES:** TWO TELEPHONES. TWO PRIVATE LINES (IFB) WITH TOUCH TONE SERVICE (IF AVAILABLE) FROM THE LOCAL CARRIER. ONE LINE SHALL BE SHARED BY THE TWO TELEPHONES. THE SECOND LINE SHALL BE SHARED BY A COMPUTER AND FACSIMILE MACHINE. THE CONTRACTOR SHALL PROVIDE AN EXCLUSION SWITCH (AB SWITCH) FOR THE COMPUTER AND FAX. TRAILER WIRING SHALL INCLUDE FOUR BOXES EQUIPPED WITH RJ-11 JACKS (TWO WIRE PAIRS PER JACK). TWO AT EACH END OF THE TRAILER. LOCATIONS WHERE PRIVATE LINE SERVICE IS NOT AVAILABLE, PROVIDE ONLY ONE LINE.
19. **FIRE EXTINGUISHER:** ONE, DRY CHEMICAL, 10 LBS. CLASS ABC, UNDERWRITERS LABORATORIES, INC. APPROVED.
20. **RANGE:** 30 IN. KITCHEN RANGE, ELECTRIC OR GAS, HAVING FOUR SURFACE BURNERS AND A 3.5 CU. FT. OVEN WITH REINFORCED OVEN RACKS.
21. **MICROWAVE OVEN:** ONE, 1.5 CU. FT. WITH AT LEAST FIVE POWER LEVELS AND A REVOLVING FLOOR OR ROTATING POWER SOURCE.
22. **SECURITY:** THIS SYMBOL ✦ ON THE FLOOR PLAN DENOTES AREAS ON THE TRAILER WHERE ADEQUATE PROTECTION AGAINST ILLEGAL ENTRY, VANDALISM AND THEFT SHALL BE PROVIDED.
23. **SIEVE SHAKER:** ONE MOTOR DRIVEN STANDARD PORTABLE SHAKER INCLUDING:
    A. A SAFETY SHIELD ON DRIVE BELT.
    B. AN ADJUSTABLE TIMED - ON/OFF SWITCH LOCATED NEAR THE SHAKER.
    C. ADAPTERS TO HANDLE EITHER 8 IN. OR 12 IN. SIEVES.

    THE SHAKER SHALL BE CAPABLE OF SHAKING A FULL SET OF 8 IN. SIEVES AS WELL AS 12 IN. SIEVES, AND SHALL BE MOUNTED 24 IN. ABOVE THE FLOOR IN A SOUND PROOF, INSULATED ENCLOSURE HAVING HINGED OPENINGS.

    THE SIEVE SHAKER SHALL BE A RO-TAP, ENDOCOTT FROM SOILTEST, SS-12R FROM GILSON OR APPROVED EQUAL. THE SHAKER SHALL BE SECURELY BOLTED TO A RIGID, STURDY SURFACE.
24. **ELECTRONIC BALANCE:** THE BALANCE SHALL COMPLY WITH ASSHTO M 231 FOR GENERAL PURPOSE, CLASS G2 BALANCES, AND THE FOLLOWING:
    A. POWER: 115 VAC
    B. MODEL: TOP LOADING
    C. CAPACITY: MINIMUM OF 35 LBS.
    D. READABILITY AND SENSITIVITY: 0.0005 LB.
    E. ACCURACY: 0.001 LB. OR 0.1%
    F. DISPLAY PANEL: SHALL BE EQUIPPED WITH THE FOLLOWING: LED DISPLAY, ON/OFF KEY, PRINT KEY, RE-ZERO KEY, WEIGHING MODE KEY, SAMPLE % KEY, SERIAL RS- 232C PORT, AND A CALIBRATION SWITCH.
    G. WEIGHING MODES: GRAMS, POUNDS, AND PERCENT OF TARGET MASS (WEIGHT).
    H. WEIGHING SURFACE DIMENSION: MINIMUM OF 9 IN. WIDE BY 12 IN. DEEP.
    I. BASE: SHALL HAVE ADJUSTABLE LEVELING FEET AND A LEVEL VIAL ATTACHED.

    THE BALANCE SHALL BE EQUIPPED WITH AN UNDERHOOK WEIGHING DEVICE AND ONE COPY OF THE OWNER'S MANUAL.
25. **RECORDING THERMOMETER:** RECORDING THERMOMETER FOR CURING TANKS SHALL BE EITHER ELECTRICAL OR MECHANICAL TYPE.
    A. THE ELECTRICAL RECORDING THERMOMETER SHALL BE EQUIPPED WITH THE FOLLOWING:
        (1) 120 VAC/60 Hz WITH A MINIMUM 3 FT. LONG POWER CORD.
        (2) MINIMUM 6 IN. DIAMETER CIRCULAR PAPER CHART WITH A BOX OF BLANK CHARTS.
        (3) A SELECTABLE TEMPERATURE SCALE WITH ONE SCALE THAT HAS A RANGE FROM 50° F. TO 120° F.
        (4) A SELECTABLE CHART SPEED WITH ONE SPEED OF 24 HOURS AND ONE SPEED OF 7 DAYS. THE SPEED ACCURACY SHALL BE ± 1.5%.
        (5) THE DISPLAY SHALL BE A MINIMUM 3 DIGIT LED WITH A MINIMUM DIGIT SIZE OF 0.5 IN.
        (6) THE TEMPERATURE ACCURACY OF THE MONITOR SHALL BE ± 1° F
        (7) THE MONITOR SHALL HAVE A CHART ADVANCE BUTTON, A TIME POINTER, A PEN ADJUST BUTTON, AND A TEMPERATURE ADJUST KNOB.

    THE RECORDING PEN SHALL BE AN INK TYPE WITH A SPARE PEN INCLUDED.

    THE TEMPERATURE PROBE SHALL BE SUBMERSIBLE TYPE J THERMOCOUPLE WITH A 15 FT. MINIMUM CORD LENGTH.

    B. THE MECHANICAL RECORDING THERMOMETER SHALL BE EQUIPPED WITH THE FOLLOWING:
        (1) MINIMUM 3 IN. DIAMETER PRESSURE SENSITIVE PAPER CHART WITH A BOX OF BLANK CHARTS.
        (2) THE STEM OF THE THERMOMETER SHALL BE A MINIMUM OF 12 IN. LONG.
        (3) THE THERMOMETER SHALL BE A KEY TYPE, WINDING MODEL CAPABLE OF 7 DAY, 24 HOUR RECORDING.
        (4) THE DRIVE MECHANISM SHALL BE CAPABLE OF OPERATING BEYOND ITS FULL RECORDING RANGE BY A MINIMUM OF 20%.
        (5) THE THERMOMETER SHALL BE CAPABLE OF OPERATING FROM 0° F TO 200° F.
        (6) THE CLOCK MECHANISM ACCURACY SHALL BE A MINIMUM OF 2% OF THE FULL-SCALE RANGE BEING USED.
        (7) THE RECORDING RANGE SHALL BE A MINIMUM OF 20° F TO 220° F.

    THE RECORDING THERMOMETER SHALL BE MOUNTED IN SUCH A WAY THAT A MINIMUM 8 IN. OF THE STEM IS IMMERSED IN THE CURING TANKS AND IS EASILY ACCESSIBLE TO CHANGE THE RECORDING TEMPERATURE CHARTS.
26. THE REQUIREMENTS LISTED HEREIN ARE INTENDED TO MEET THE NEEDS OF THE CDOT TESTING PERSONNEL CONCERNING TESTING FACILITIES. THERE IS NO INTENT TO SPECIFY ANY STRUCTURAL PORTIONS OF THE SUBJECT LABORATORY EXCEPT AS NEEDED TO SATISFACTORILY PERFORM THE REQUIRED TESTING OF MATERIALS.

THE GENERAL NOTES ARE CONTINUED ON SHEET 2.

Computer File Information		Sheet Revisions	
Creation Date: 07/31/19		Date:	Comments
Designer Initials: JBK	R-X		
Last Modification Date: 07/31/19	R-X		
Detailer Initials: LTA	R-X		
CAD Ver.: MicroStation V8 Scale: Not to Scale Units: English	R-X		

Colorado Department of Transportation
2829 West Howard Place
CDOT HQ, 3rd Floor
Denver, CO 80204
Phone: 303-757-9021 FAX: 303-757-9868
Engineering and Standards Services JBK

FIELD LABORATORY CLASS 2

Issued by Engineering and Standards Services: July 31, 2019

STANDARD PLAN NO.
M-620-2
Standard Sheet No. 1 of 2
Project Sheet Number:

GENERAL NOTES (CONTINUED FROM SHEET 1)

27. **FORCED AIR CONVECTION OVEN:** REQUIRED ON PROJECTS WITH 5,000 OR MORE TONS OF HMA OR WHEN SPECIFIED IN THE PLANS. THE FORCED AIR OVEN REPLACES THE RANGE. THE OVEN SHALL BE RATED TO AT LEAST 1500 WATTS INCLUDING:
    1. AT LEAST ONE BLOWER TO CIRCULATE AIR INSIDE WITHOUT DISTURBING FINE GRAINED SOILS PLACED IN THE OVEN.
    2. A MINIMUM INTERIOR CAPACITY OF 4.8 CUBIC FEET.
    3. AN EXHAUST CHAMBER ADAPTER TO CONNECT TO A 3 INCH PIPE WHICH SHALL BE VENTED TO THE OUTSIDE.
    4. AT LEAST TWO ADJUSTABLE SHELVES.
    5. AN OVER-TEMPERATURE PROTECTION DEVICE.
    6. AN ELECTRONIC CONTROL SYSTEM WITH DIGITAL TEMPERATURE READ-OUT AND DIGITAL TEMPERATURE SET POINTS TO PRECISELY READ AND SET THE OVEN TEMPERATURE.

    THE OVEN SHALL HAVE A TEMPERATURE RANGE FROM 104 °F TO 464 °F AND HAVE A UNIFORM TEMPERATURE OF ± 3 °F AT 230 °F.

    THE OVEN SHALL BE CAPABLE OF MAINTAINING A CONSTANT TEMPERATURE, ± 5 °F, THROUGHOUT ITS TEMPERATURE RANGE.

    THE OVEN HEATING ELEMENTS SHALL NOT BE ALLOWED TO OPERATE WITHOUT THE BLOWER.

    THE FIELD LABORATORY SHALL BE EQUIPPED WITH A SEPARATE ELECTRICAL CIRCUIT TO SUPPLY POWER TO THE FORCED CONVECTION OVEN.

    IN ADDITION TO THE ABOVE FORCED AIR CONVECTION OVEN, A HOT PLATE CONFORMING TO THE FOLLOWING SHALL BE PROVIDED:
    1. TWO BURNER, PORTABLE, ELECTRICAL "CAL-ROD" OR "RANGETTE" TYPE.
    2. AT LEAST ONE BURNER SHALL BE RATED A MINIMUM OF 800 WATTS.
    3. EACH HOT PLATE SHALL BE EQUIPPED WITH AN ON-OFF INDICATOR LIGHT.

28. **CURING TANK:** MINIMUM 95 GALLON CAPACITY WITH A CIRCULATING PUMP WITH A 120 GPH RATING. TANK CAPACITY WILL INCREASE FOR LARGE CONCRETE PROJECTS WHEN SPECIFIED IN THE PLANS.

COLORADO LICENSED
JOSHUA J. PALMER
PE 0050188
9/13/19
PROFESSIONAL ENGINEER

Computer File Information		Sheet Revisions	
Creation Date: 07/31/19		Date:	Comments
Designer Initials: JBK	R-X		
Last Modification Date: 07/31/19	R-X		
Detailer Initials: LTA	R-X		
CAD Ver.: MicroStation V8 Scale: Not to Scale Units: English	R-X		

Colorado Department of Transportation
2829 West Howard Place
CDOT HQ, 3rd Floor
Denver, CO 80204
Phone: 303-757-9021 FAX: 303-757-9868
Engineering and Standards Services JBK

FIELD LABORATORY CLASS 2

Issued by Engineering and Standards Services: July 31, 2019

STANDARD PLAN NO.
M-620-2
Standard Sheet No. 2 of 2
Project Sheet Number:

GENERAL NOTES

1. CLASS 2 FIELD OFFICES SHALL CONSIST OF A WEATHERPROOF, INSULATED, TEMPORARY OFFICE TYPE TRAILER, BUILT TO THE UNIFORM BUILDING CODE SERIES OF CODES, WITH FLOOR PLAN AND EQUIPMENT LAYOUT SIMILAR TO THE DRAWING ON THIS SHEET. IT SHALL MEET OR EXCEED THE FOLLOWING REQUIREMENTS.
2. **DIMENSIONS:** 50 FT. LONG x 12 FT. WIDE OUTSIDE, 7 FT.-6 IN. HEIGHT INSIDE.
3. **WINDOWS:** A MINIMUM OF 6, WITH PROVISION FOR CROSS VENTILATION AND LOCKING.
4. **DOORS:** TWO INSIDE DOORS, MAY BE LOCATED EITHER TO ONE SIDE OR AT CENTER OF PARTITION. ONE CLOSET DOOR. TWO OUTSIDE DOORS SHALL BE REINFORCED AND HAVE DEADBOLT LOCKS. DECK, STEPS, AND HANDRAILS AT EACH OUTER DOOR. THE STEPS SHALL BE PLACED SO THE DECK CAN BE ACCESSED EITHER FROM THE SIDE OR FROM THE FRONT. THE DECK, RAILS, AND STEPS SHALL MEET OSHA REQUIREMENTS.
5. **HEATING & AIR CONDITIONING:** THREE TON CAPACITY AIR CONDITIONING AND 80,000 BTU CAPACITY HEATING, CONNECTED TO DUCTING & THERMOSTAT CONTROLLED.
6. **ELECTRICAL:** WORK SHALL CONFORM TO THE NATIONAL ELECTRICAL CODE FOR 110/220 VOLTS, 60 Hz, APPLICATIONS AND PROVIDE RELIABLE UNIFORM POWER TO PROPERLY OPERATE ALL FIELD OFFICE EQUIPMENT.
7. **LIGHTING:** ADEQUATE FLUORESCENT LIGHTING OVER ALL DRAFTING TABLES AND DESK AREAS. THERE SHALL BE ONE 110 VOLT EXTERIOR PORCH LIGHT FIXTURE WITHIN 2 FT. OF EACH EXTERIOR DOOR.
8. **DESKS:** ONE 30 IN. x FULL INSIDE WIDTH x 30 IN. HIGH AT EACH END OF THE TRAILER, SUPPORTED BY A LEGAL SIZE 2 DRAWER METAL FILE CENTER PEDESTAL. EACH DESK TOP SHALL HAVE AN OVERHEAD SHELF AND TWO PEN DRAWERS.
9. **DRAFTING TABLE:** ONE 38 IN. x 96 IN. TABLE, SLOPED 12:1 TO 37 IN. HEIGHT AT FRONT EDGE OR WITH PROVISION FOR ADJUSTING THE SLOPE.
10. **WORK TABLE:** ONE 72 IN. x 36 IN. TABLE. THE TOP OF THE TABLE SHALL BE FREE OF ALL SCRATCHES, CHIPS, AND DENTS.
11. **OFFICE DESK:** ONE 72 IN. x 36 IN. DESK WITH SIX DRAWERS AND ONE CENTER PEN DRAWER. THE TOP OF THE DESK SHALL BE FREE OF ALL SCRATCHES, CHIPS, AND DENTS.
12. **FURNITURE:** EIGHT CHAIRS WITH ROLLERS AND TWO DRAFTING STOOLS. EACH OF APPROPRIATE HEIGHT. ONE WORK TABLE OR DESK. ALL CHAIRS SHALL BE ERGONOMICALLY BUILT.
13. **PLAN STORAGE:** A PLAN RACK OR FILE FOR FULL SIZE PLANS.
14. **CLOSET:** A LOCKED STORAGE AREA OF 15 SQ. FT.
15. **DRINKING WATER SUPPLY:** DRINKING WATER DISPENSED FROM AN ACCEPTABLE WATER COOLING DEVICE.
16. **TELEPHONES:** THREE, 2-LINE TELEPHONES. FOUR PRIVATE LINES (IFB) WITH TOUCH TONE SERVICE. TWO LINES ARE FOR TELEPHONE SERVICES, WITH ROLL-OVER CAPABILITY FOR THE THREE TELEPHONES. ONE LINE SHALL BE USED FOR THE COMPUTER, AND ONE LINE SHALL BE USED FOR THE FACSIMILE MACHINE. TRAILER WIRING SHALL INCLUDE 9 RJ-11 JACKS, ONE JACK EACH FOR A TWO-LINE TELEPHONE, A COMPUTER LINE, AND A FACSIMILE MACHINE LINE AT EACH END OF THE OFFICE, AND IN THE CENTER AREA OF THE OFFICE.
17. **FIRE EXTINGUISHER:** TWO, DRY CHEMICAL, 10 LBS. CLASS ABC, UNDERWRITERS LABORATORIES, INC. APPROVED.
18. **SECURITY:** THIS SYMBOL ✦ ON THE FLOOR PLAN DENOTES AREAS ON THE TRAILER WHERE ADEQUATE PROTECTION AGAINST ILLEGAL ENTRY, VANDALISM AND THEFT SHALL BE PROVIDED.

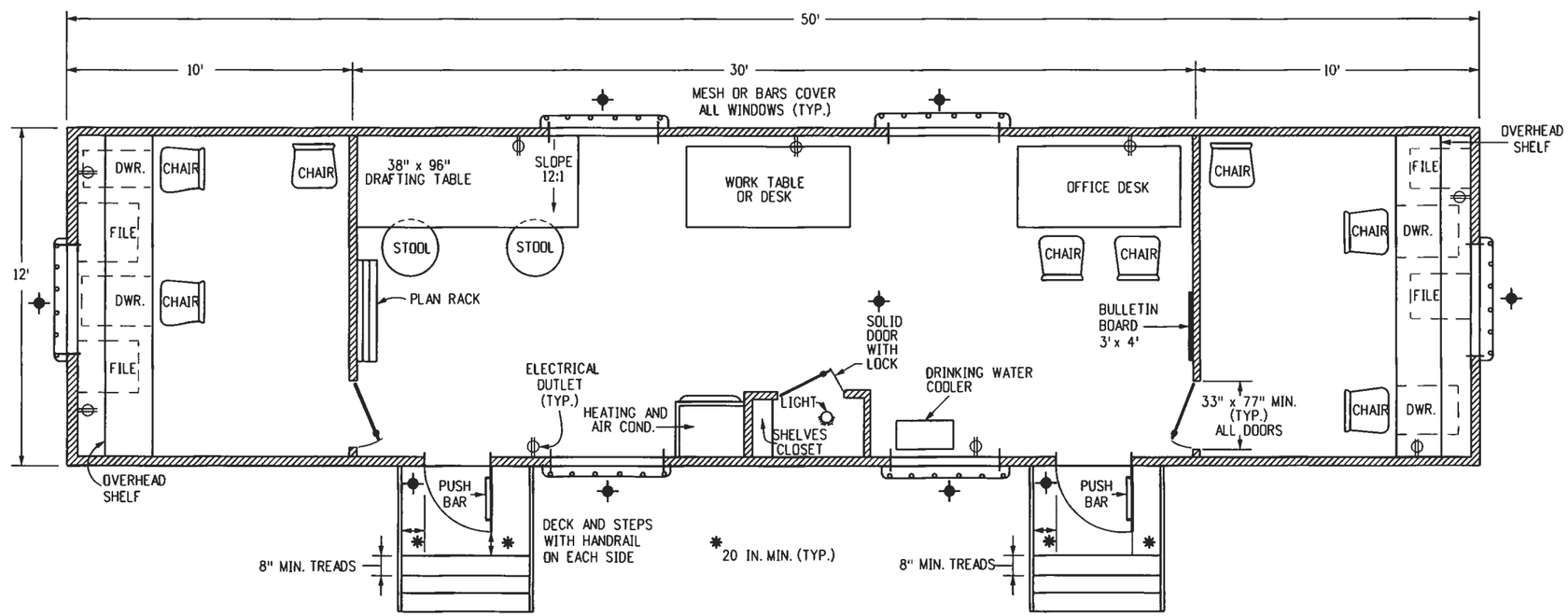

FLOOR PLAN

Computer File Information		Sheet Revisions	
Creation Date: 07/31/19		Date:	Comments
Designer Initials: JBK	(R-X)		
Last Modification Date: 07/31/19	(R-X)		
Detailer Initials: LTA	(R-X)		
CAD Ver.: MicroStation V8 Scale: Not to Scale Units: English	(R-X)		

Colorado Department of Transportation
2829 West Howard Place
CDOT HQ, 3rd Floor
Denver, CO 80204
Phone: 303-757-9021 FAX: 303-757-9868
Engineering and Standards Services JBK

FIELD OFFICE CLASS 2

Issued by Engineering and Standards Services: July 31, 2019

STANDARD PLAN NO.
M-620-12
Standard Sheet No. 1 of 1
Project Sheet Number:

SPACING FOR DELINEATOR POSTS ON HORIZONTAL CURVES

'R' RADIUS (FEET)	'D' DEGREE OF CURVE	* - ● SPACING ON CURVE (FEET)	* SPACING IN ADVANCE OF AND BEYOND CURVE (FEET)		
			FIRST SPACE	SECOND SPACE	THIRD SPACE
20000	0° 17'	300	300	300	300
17000	0° 20'	300	300	300	300
14000	0° 25'	300	300	300	300
12000	0° 29'	300	300	300	300
10000	0° 34'	299	300	300	300
8000	0° 43'	267	300	300	300
6000	0° 57'	231	300	300	300
5000	1° 09'	211	300	300	300
4000	1° 26'	189	300	300	300
3500	1° 38'	176	300	300	300
3000	1° 55'	163	300	300	300
2500	2° 18'	148	297	300	300
2000	2° 52'	132	265	300	300
1800	3° 11'	125	251	300	300
1600	3° 35'	118	236	300	300
1400	4° 06'	110	220	300	300
1200	4° 47'	102	203	300	300
1000	5° 44'	92	185	277	300
900	6° 22'	87	175	262	300
800	7° 10'	82	164	246	300
700	8° 11'	76	153	229	300
600	9° 33'	70	141	211	300
500	11° 28'	64	127	191	300
450	12° 44'	60	120	180	300
400	14° 20'	56	112	168	300
350	16° 22'	52	104	156	300
300	19° 06'	47	95	142	285
250	22° 55'	42	85	127	255
200	28° 39'	37	73	110	220
150	38° 12'	30	60	90	180
100	57° 18'	21	42	64	127
75	76° 24'	20	30	45	90

* ON CONVENTIONAL ROADWAYS OMIT THE "THIRD SPACE" AND DOUBLE THE SPACING "ON THE CURVE" AND "IN ADVANCE OF AND BEYOND THE CURVE" (300' MAX.)

● SPACING FOR CURVES NOT SHOWN MAY BE COMPUTED FROM THE FORMULA: $S = 3\sqrt{R-50}$

SPACING IN ADVANCE OF AND BEYOND THE CURVE IS: FIRST SPACE = 2S, SECOND SPACE = 3S AND THIRD SPACE = 6S. SPACES SHOULD NOT BE LESS THAN 20 FT. OR GREATER THAN 300 FT.

RESIDUAL SPACE AFTER "ON CURVE" SPACING IS APPLIED, SHALL BE DIVIDED EQUALLY AMONG ALL OF THE "ON CURVE" SPACES SO THAT THE LAST DELINEATOR FALLS AT THE P.T. OR C.S. OF THE CURVE.

GENERAL NOTES

1. SEE THE TABULATION OF QUANTITIES INCLUDED IN THE PLANS FOR THE NUMBERS AND LOCATIONS OF DELINEATORS REQUIRED.
2. THE COLOR OF DELINEATOR REFLECTORS SHALL, IN ALL CASES, CONFORM TO THE COLOR OF EDGE LINES, EXCEPT:
   A. RED, GREEN AND BLUE DELINEATORS
   B. TYPE III DELINEATORS (3 YELLOW)
3. THE COLOR OF DELINEATOR POSTS AND ALL SPECIAL MOUNTING BRACKETS SHALL BE INTERSTATE GREEN.
4. DELINEATORS ARE MANDATORY ON ALL ROADWAYS ON THE STATE HIGHWAY SYSTEM. THEY ARE OPTIONAL WHERE FIXED SOURCE LIGHTING IS IN OPERATION: HOWEVER, ALL CONCRETE BARRIER AND TYPE 3 GUARDRAIL SHALL HAVE REFLECTORS OR SUPPLEMENTAL TABS.
5. TYPE I (YELLOW) DELINEATORS ARE MANDATORY ON THE LEFT SIDE OF EXPRESSWAY ROADWAYS (MEDIAN).
6. RED DELINEATORS MAY BE INSTALLED ON THE REVERSE SIDE OF ANY DELINEATOR AND/OR A SEPARATE POST ON ONE-WAY ROADWAYS OR RAMPS WHERE INVESTIGATION SHOWS A NEED FOR WRONG-WAY MOVEMENT PROTECTION.
7. TYPE III (3-YELLOW) DELINEATORS ARE TO BE INSTALLED TO WARN OF THE EXISTENCE OF OBJECTS NOT ACTUALLY IN THE ROADWAY BUT THAT MAY BE SO CLOSE TO THE EDGE OF THE ROADWAY THAT THEY NEED A MARKER. THESE INCLUDE UNDERPASS PIERS, BRIDGE ABUTMENTS, HANDRAILS, AND CULVERTS HEADS. THE INSIDE EDGE OF THE MARKER SHALL BE IN LINE WITH THE INNER EDGE OF THE OBSTRUCTION.
8. INTERCHANGE RAMPS SHALL BE DELINEATED ON THE RIGHT SIDE, THE LEFT SIDE, OR BOTH SIDES WITH TYPE I DELINEATORS OF THE APPROPRIATE COLOR (CRYSTAL OR YELLOW) AS ILLUSTRATED ON SHEET NUMBER 3.
9. FRONTAGE ROAD DELINEATORS ARE NOT TO BE INSTALLED WHERE THEY MIGHT BE MISLEADING TO MAINLINE TRAFFIC.
10. SPACING OF DELINEATORS FOR TUNNELS AND SNOW SHEDS SHALL BE AS SHOWN ON THE PLANS.
11. WHERE PRACTICABLE, THE APPROACH ENDS OF ISLANDS AND MEDIANS SHOULD BE DELINEATED.
12. TYPICAL INSTALLATION LOCATIONS FOR ALL TYPE I DELINEATORS ON TANGENT SECTIONS SHALL BE ON 1/10TH MILE INTERVALS IN RELATION TO THE HIGHWAY MILE MARKERS. A 200 FOOT MINIMUM WILL APPLY TO THE "LAST SPACE" EXITTING A HORIZONTAL CURVE AND THE FOLLOWING DELINEATOR SHALL BE INSTALLED ON THE NEXT 1/10TH MILE LOCATION (MAXIMUM SPACING IS ALSO 528 FEET). AT ALL OTHER LOCATIONS, SUCH AS A & D LANES, RAMPS, WIDTH TRANSITIONS, AND TURN LANES, A "LAST SPACE" SHOULD NOT BE LESS THAN 50% OF THE SPACING SHOWN FOR THAT LOCATION.
13. TYPE II DELINEATORS SHALL BE INSTALLED AT 100 FOOT SPACING ON ALL ACCELERATION LANES AND TAPERS, DECELERATION LANES AND TAPERS, AND LANE TRANSITIONS INVOLVING PAVEMENT WIDTH REDUCTIONS IN THE DIRECTION OF TRAFFIC. TYPE II DELINEATORS ARE NOT REQUIRED FOR REDIRECT TAPERS, FOR TRAFFIC MOVING IN THE DIRECTION OF WIDER PAVEMENT OR ON THE SIDE OF THE ROADWAY WHERE THE ALIGNMENT IS NOT AFFECTED BY THE LANE REDUCTION. TYPE II (YELLOW) DELINEATORS SHALL ONLY BE USED WHEN A RAISED OR DEPRESSED MEDIAN IS PRESENT. FOR WIDTH TRANSITIONS WHERE TRAFFIC MOVES IN THE DIRECTION OF WIDER PAVEMENT, THE NORMAL SPACING SHALL BE ADJUSTED SO THERE IS A DELINEATOR AT EACH OF THE ANGLE POINTS OF THE WIDTH TRANSITION.
14. TYPE I DELINEATORS SHALL BE INSTALLED AT 100 FOOT SPACING ON INTERCHANGE RAMP TANGENT SECTION AND BY THE SPACING TABLE ON RAMP CURVES. SPACING "IN ADVANCE OF AND BEYOND CURVE" DOES NOT APPLY TO RAMP CURVES.
15. FOR SPACING ON A CURVE THAT FOLLOWS A TANGENT SECTION WITH SPACES SHORTER THAN THOSE SHOWN IN THE CURVE SPACING TABLE: MODIFY THE TABLE SO THAT THE CURVE SPACING IS NO GREATER THAN THE TANGENT SPACING.
16. WHERE GUARDRAIL INTRUDES INTO THE SPACE BETWEEN THE PAVEMENT EDGE AND THE LINE OF DELINEATORS, PLACE THE DELINEATORS IMMEDIATELY ABOVE OR BEHIND THE RAIL FACE, AND DELINEATOR SPACING SHALL BE THE SAME BEHIND THE RAIL FACE.
17. WHEN NORMAL SPACING FALLS ON AN INTERSECTING ROADWAY, DRIVEWAY, ETC. THE DELINEATOR MAY BE MOVED EITHER DIRECTION A DISTANCE NOT EXCEEDING ONE-QUARTER OF THE NORMAL SPACING.
18. THE ANGULAR PLACEMENT FOR ALL DELINEATORS SHOULD BE BY THE "TRAFFIC ORIENTING" METHOD: AIM THE FACE OF THE DELINEATOR AT THE CENTERLINE OF THE NEAREST LANE OF APPROACHING TRAFFIC AT A POINT 300 FEET AWAY (OR AS DIRECTED BY THE ENGINEER FOR SPECIAL OR LOCATIONS AND CURVES HAVING A DEGREE OF CURVATURE GREATER THAN 6 DEGREES).
19. TYPE III (YELLOW-BLUE-YELLLOW) DELINEATORS ARE TO BE INSTALLED TO WARN OF THE EXISTENCE OF AN ASPHALT CURB INSTALLED BELOW GUARDRAIL. THE DELINEATOR SHALL BE PLACED IN LINE WITH THE ASPHALT CURB.
20. IF FARMING OR OTHER OVERSIZE LOADS ACTIVELY UTILIZE SECTIONS OF ANY TWO-LANE STATE HIGHWAY, THE DELINEATOR POSTS SHALL BE STAGGERED NO LESS THAN EVERY ONE-TENTH OF A MILE. FLEXIBLE DELINEATORS OR OTHER ENGINEERING SOLUTIONS SHALL BE CONSIDERED UNDER THE DISCRETION OF THE ENGINEER. DELINEATOR POSTS SHALL NOT BE STAGGERED WHERE IT IS DEEMED UNSAFE BY THE ENGINEER. (i.e., CURVES)

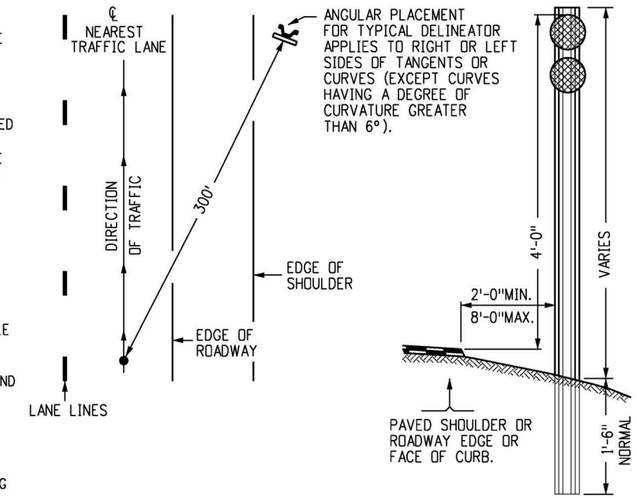

TYPICAL DELINEATOR PLACEMENT

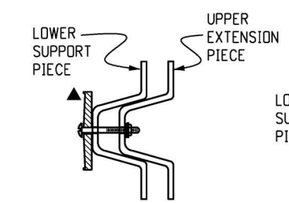

SECTION B-B

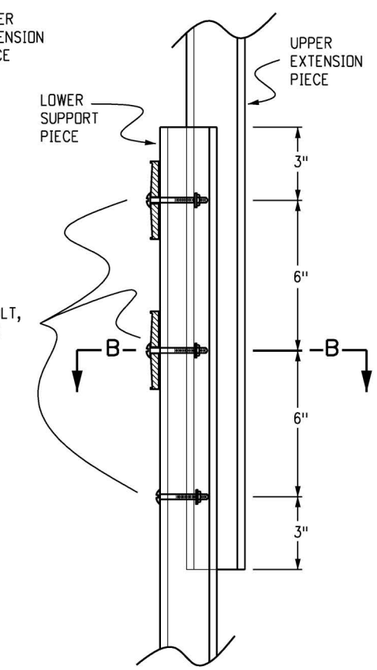

TYPICAL DOUBLE HEIGHT INSTALLATION

TYPICAL INSTALLATION SINGLE DIRECTION

TYPICAL INSTALLATION BACK - TO - BACK

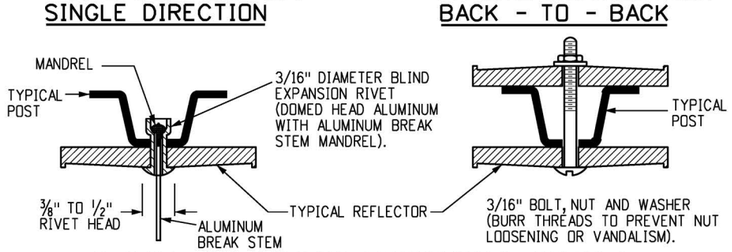

TYPICAL DELINEATOR FABRICATION DETAILS

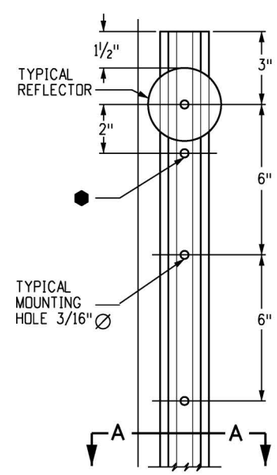

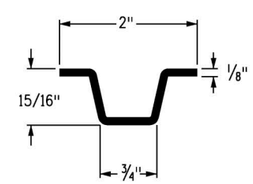

SECTION A-A

ALLOWABLE TOLERANCE DIMENSION:

1" AND UP	± 1/8"
1/2" TO 1"	± 1/16"
1/2" AND BELOW	± 1/32"

WEIGHT:

MINUS 3 1/2% OF THE WEIGHT OF ANY ONE POST.

TYPICAL 1.12# DELINEATOR POST

POST NOTES

1. POSTS SHALL BE A UNIFORM FLANGED CHANNEL SECTION (U-SHAPE) MADE FROM HOT ROLLED STRUCTURAL STEEL, RE-ROLLED RAIL STEEL, OR NEW BILLET STEEL, HAVING A MINIMUM YIELD STRENGTH OF 30,000 PSI AND A MINIMUM TENSILE STRENGTH OF 50,000 PSI.
2. POSTS SHALL BE SET IN DRILLED OR EXCAVATED HOLES, PLACED PLUMB AND FIRMLY TAMPED IN PLACE; OR MAY BE DRIVEN PLUMB.
3. A MINIMUM OF 3 HOLES OF 3/16" DIAMETER, SPACED AS SHOWN, ARE REQUIRED FOR ALL DELINEATOR POSTS.

● AN ADDITIONAL HOLE IS REQUIRED WHEN THE ADJUSTABLE REFLECTOR BRACKET IS USED.

DOUBLE HEIGHT POSTS

4. THE LOWER SECTION OF THE 2-POST COMBINATION SHALL BE INSTALLED ACCORDING TO THE SAME PLACEMENT SPECIFICATIONS AS A TYPICAL SINGLE POST INSTALLATION.

▲ 5. REFLECTORS SHALL BE MOUNTED AT THE CONNECTION OF THE POSTS AND AT THE TOP OF THE UPPER POST IN ACCORDANCE WITH THE APPROPRIATE CONFIGURATION FOR THE APPLICATION.

6. THE LENGTH OF THE UPPER EXTENSION PIECE SHALL NOT EXCEED 7 FEET.

Computer File Information	
Creation Date: 07/04/12	
Created By: KEN	
Last Modification Date: 04/03/25	
Last Modified By: NRIVERA	
CAD Ver.: MicroStation V8 Scale: Not to Scale Units: English	

	Sheet Revisions	
	Date:	Comments
R-2	04/03/25	FIXED TYPO
R-1	11/07/23	ADDED NOTE 20

Colorado Department of Transportation
2829 W. Howard Pl.
Denver, CO 80204
Phone: 303-757-9654
FAX: 303-757-9219
Traffic Safety & Engineering EB

DELINEATOR INSTALLATIONS

Issued By: Traffic Safety & Engineering Branch July 31, 2019

STANDARD PLAN NO.
S-612-1
Standard Sheet No. 1 of 8
Project Sheet Number:

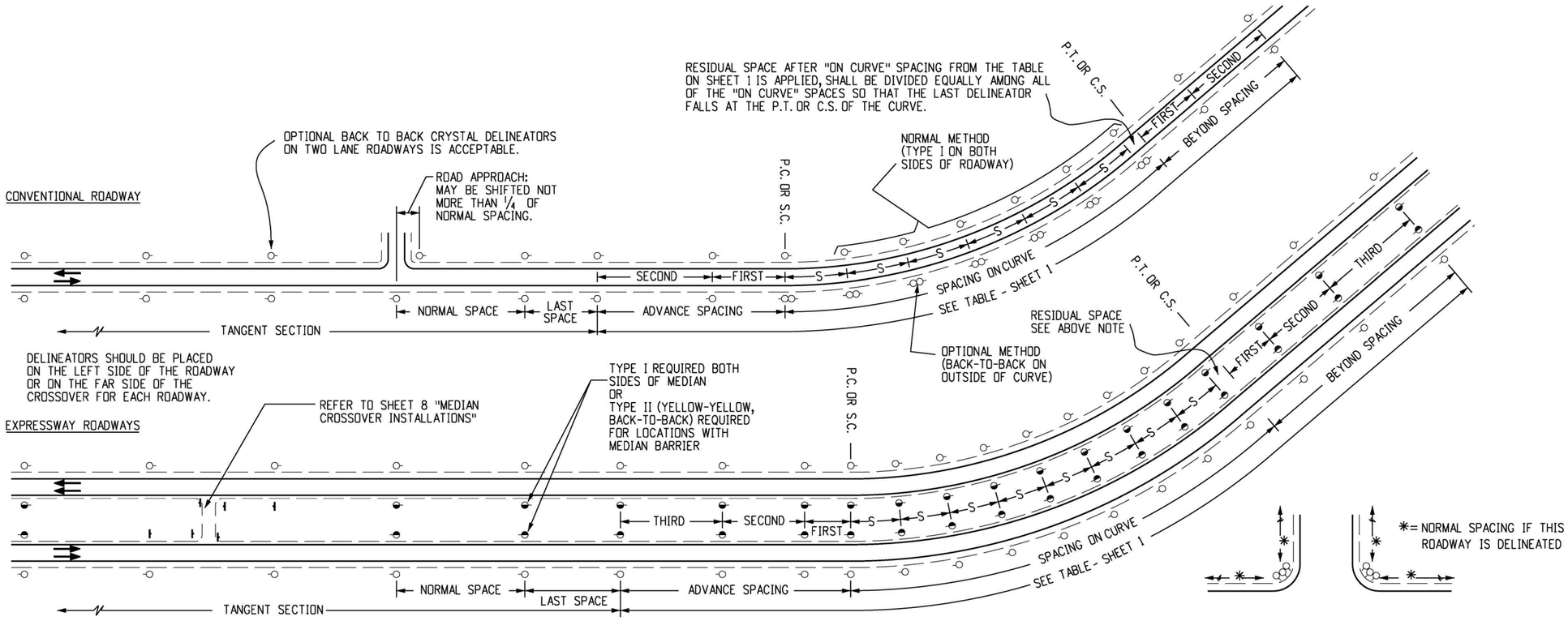

TYPICAL INSTALLATION FOR TANGENT SECTION AND CURVES

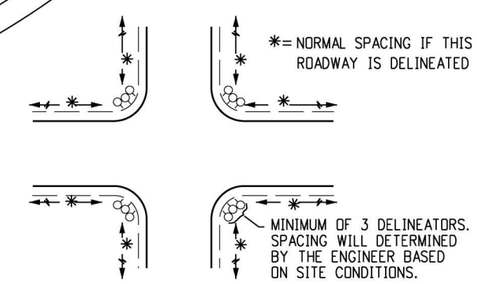

TYPICAL INSTALLATION FOR MINOR INTERSECTION

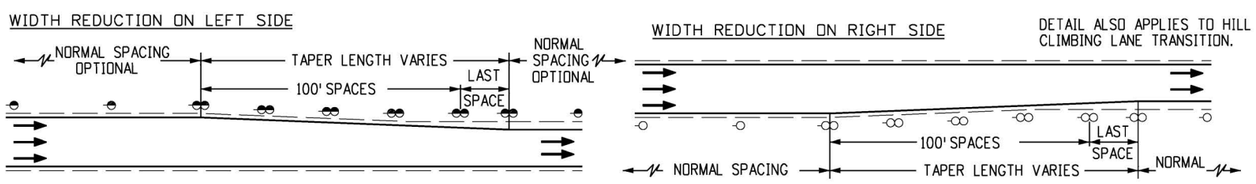

TYPICAL INSTALLATION FOR LANE TRANSITION

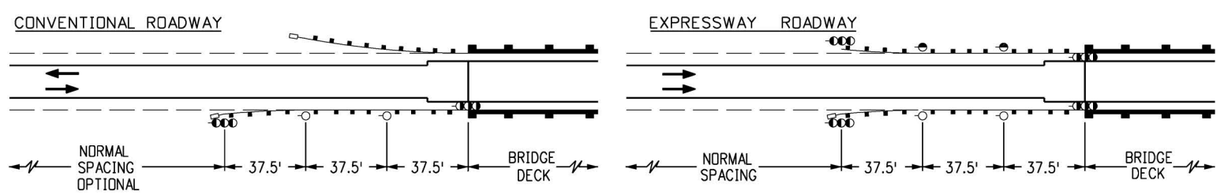

TYPICAL INSTALLATION FOR BRIDGE APPROACHES

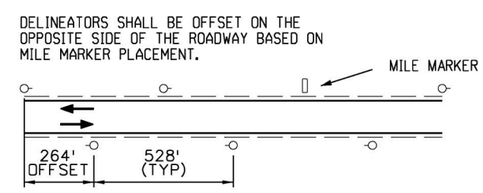

TYPICAL INSTALLATION STAGGERED DELINEATORS, 2-LANE STATE HIGHWAY

DELINEATOR SYMBOLS AND TYPICAL CONFIGURATION

- TYPE I (CRYSTAL)
- TYPE I (YELLOW)
- TYPE I (RED)
- TYPE I (BLUE) (MAINTENANCE MARKER)
- TYPE I (GREEN) (MAINTENANCE MARKER)
- TYPE II (2 CRYSTAL)
- TYPE II (2 YELLOW)
- TYPE II (CRYSTAL-CRYSTAL BACK-TO-BACK)
- TYPE II (YELLOW-YELLOW, BACK-TO-BACK)
- TYPE II (CRYSTAL-RED, BACK-TO-BACK)
- TYPE II (YELLOW-RED, BACK-TO-BACK)
- TYPE III (3 YELLOW)
- TYPE III (2 CRYSTAL-RED, BACK-TO-BACK)
- TYPE III (2 YELLOW-RED, BACK-TO-BACK)
- TYPE III (GREEN) (MAINTENANCE MARKER)
- TYPE III (BLUE) (MAINTENANCE MARKER)
- MEDIAN CROSSOVER DELINEATOR
- TYPE III (YELLOW-BLUE-YELLOW)
- BRIDGE JOINT MARKER (OM1-U, OM1-D)

BRIDGE APPROACH NOTES

1. WHERE CURB TO CURB WIDTH OF BRIDGE IS EQUAL TO OR GREATER THAN ROADWAY WIDTH PLUS USABLE SHOULDER WIDTH, USE TYPE III DELINEATORS ONLY AND OMIT TYPE I DELINEATORS.
2. FOR GUARD RAIL INSTALLATIONS WHERE APPROACH END IS NOT FLARED, PLACE A TYPE III DELINEATOR (3 GREEN) IMMEDIATELY IN ADVANCE OF APPROACH END.
3. ALL TYPE I DELINEATORS ARE TO BE MOUNTED ABOVE OR IMMEDIATELY BEHIND GUARD RAIL AND ARE NOT A CONSTANT DISTANCE FROM THE ROADWAY.

Computer File Information		Sheet Revisions	
Creation Date: 07/04/12		Date:	Comments
Created By: RPR	R-3	04/03/25	ADDED STAGGERED DELINEATOR NOTE
Last Modification Date: 04/03/25	R-2	04/30/24	UPDATED DELINEATOR SYMBOLS
Last Modified By: NRIVERA	R-1	11/07/23	ADDED STAGGERED DELINEATORS
CAD Ver.: MicroStation V8 Scale: Not to Scale Units: English			

Colorado Department of Transportation
2829 W. Howard Pl.
Denver, CO 80204
Phone: 303-757-9654
FAX: 303-757-9219
Traffic Safety & Engineering
EB

DELINEATOR INSTALLATIONS

Issued By: Traffic Safety & Engineering Branch July 31, 2019

STANDARD PLAN NO.
S-612-1
Standard Sheet No. 2 of 8
Project Sheet Number:

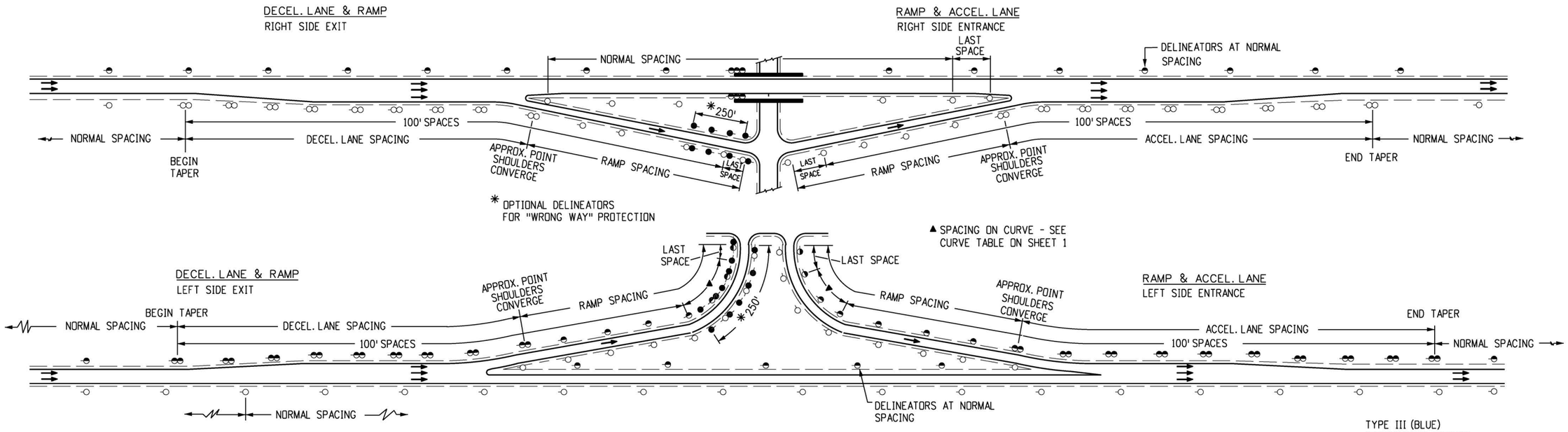

TYPICAL INSTALLATION FOR INTERCHANGES

NOTE

"SPACING IN ADVANCE OF AND BEYOND CURVE" (1ST., 2ND. & 3RD. SPACES) AS SHOWN IN THE SPACING TABLE ON SHEET 1 SHALL NOT APPLY TO RAMP CURVES

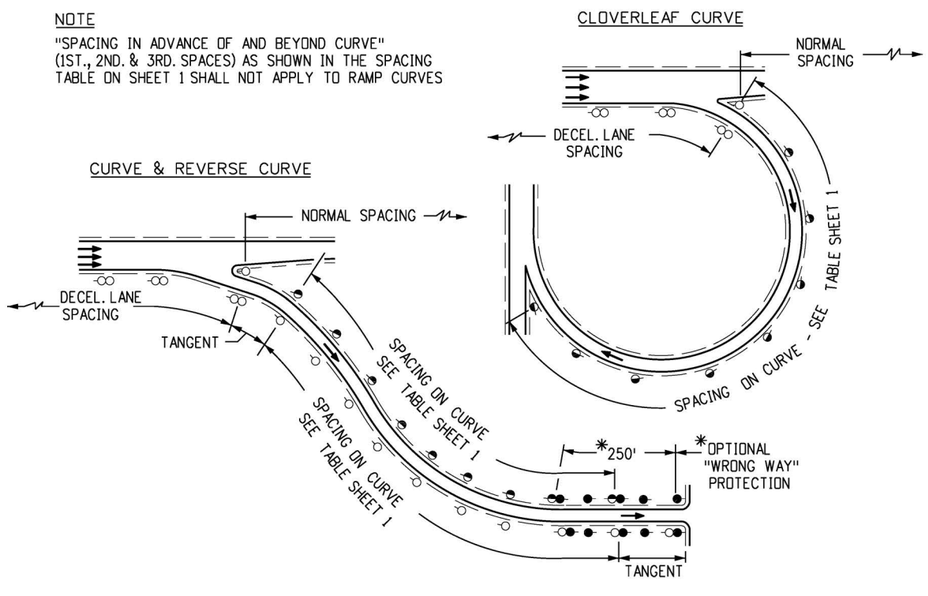

TYPICAL INSTALLATION FOR RAMP CURVES

LEGEND

A = SEE CURVE SPACING TABLE
B = ADVANCE SPACES (FIRST & SECOND)
C = SPACING ON CURVE
D = BEYOND SPACES (FIRST & SECOND)
E = LAST SPACE

NOTE

* DELINEATORS MAY BE INSTALLED IF NECESSARY FOR "WRONG WAY" PROTECTION SEE OTHER TYPICAL INSTALLATIONS

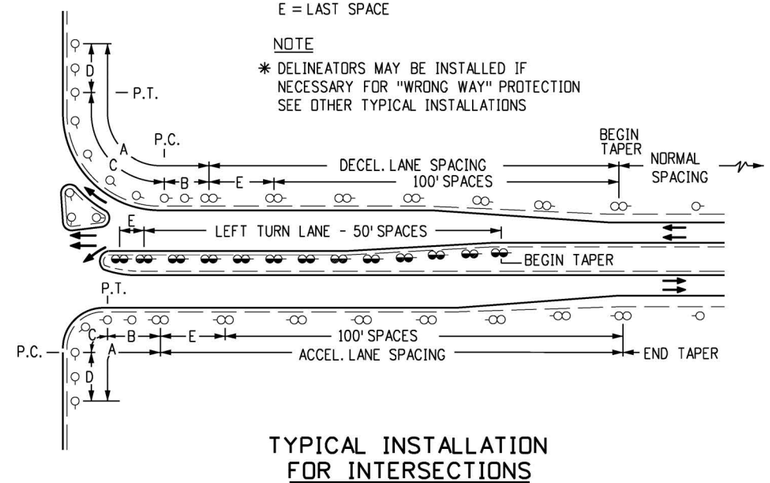

TYPICAL INSTALLATION FOR INTERSECTIONS

WITH ACCEL. & DECEL. LANES

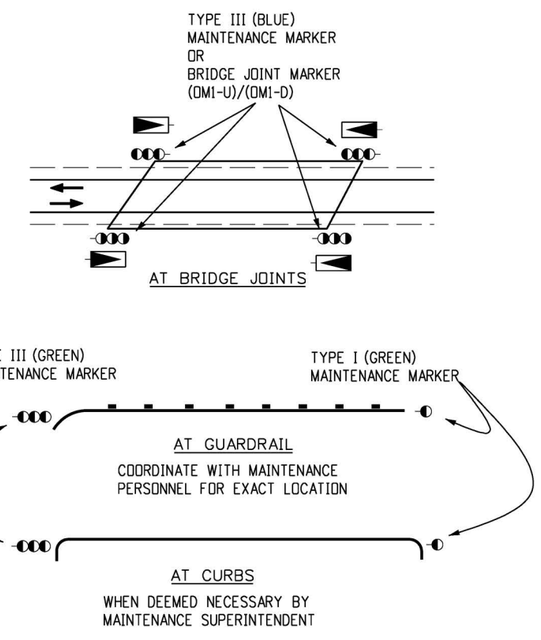

MAINTENANCE MARKER LOCATIONS FOR OBSTRUCTIONS

Computer File Information		Sheet Revisions	
Creation Date: 07/04/12		Date:	Comments
Created By: RPR	R-2	04/03/25	FIXED TYPO
Last Modification Date: 04/03/25	R-1	04/30/24	UPDATED MAINTENANCE MARKERS
Last Modified By: NRIVERA			
CAD Ver.: MicroStation V8 Scale: Not to Scale Units: English			

Colorado Department of Transportation
2829 W. Howard Pl.
Denver, CO 80204
Phone: 303-757-9654
FAX: 303-757-9219
Traffic Safety & Engineering EB

DELINEATOR INSTALLATIONS

Issued By: Traffic Safety & Engineering Branch July 31, 2019

STANDARD PLAN NO.
S-612-1
Standard Sheet No. 3 of 8
Project Sheet Number:

TYPICAL BARRIER VIEW

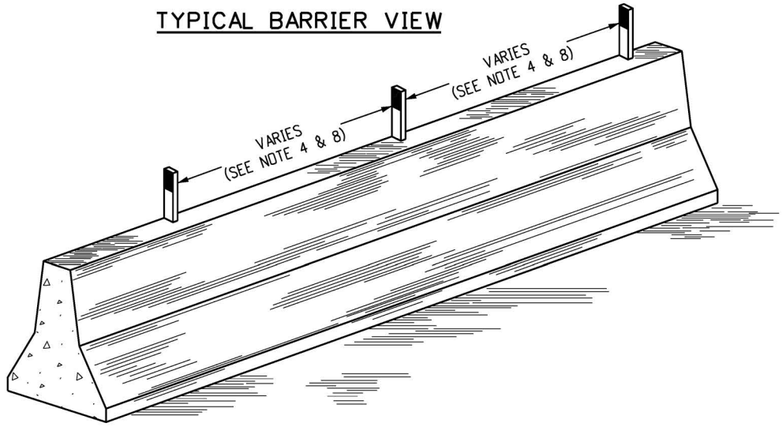

TYPICAL REFLECTOR DETAILS FOR CONCRETE BARRIER

PLAN VIEW

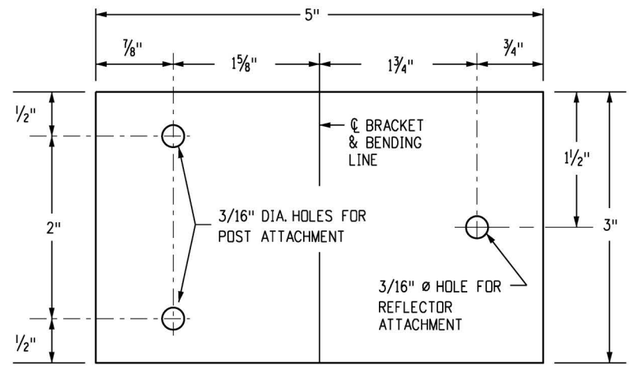

TYPICAL ADJUSTABLE REFLECTOR BRACKET

REFLECTOR TAB

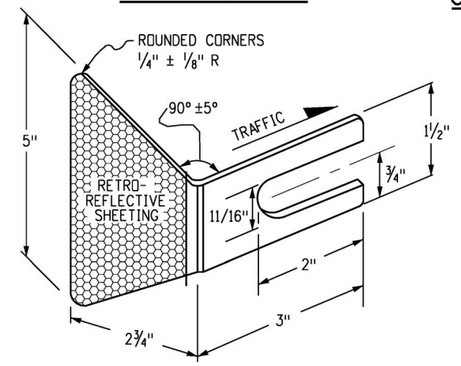

MOUNTING POSITION ON GUARD RAIL TYPE 3

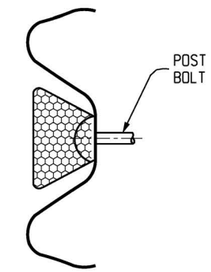

TYPICAL GUARDRAIL REFLECTOR TAB

SEE THE M-606-1 STANDARD PLAN FOR REFLECTOR TAB FABRICATION AND PLACEMENT DETAILS. RETROREFLECTIVE SHEETING SHALL CONFORM TO ASTM D4956 TYPE IV.

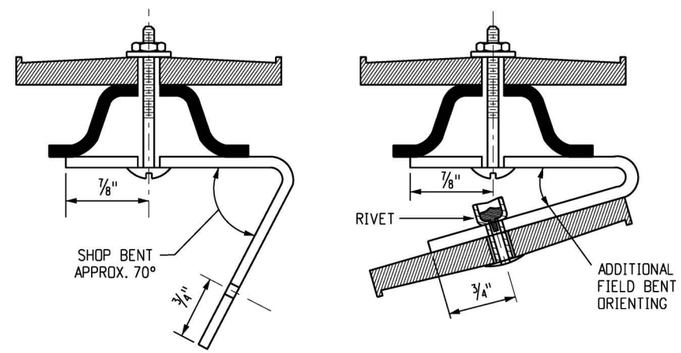

TYPICAL BRACKET FABRICATION DETAILS

BRACKET NOTES

1. THE ADJUSTABLE REFLECTOR BRACKET IS TO BE USED TO "TRAFFIC ORIENT" BACK-TO-BACK DELINEATORS USED ON CURVES.
2. REFLECTOR BRACKETS SHALL BE FABRICATED FROM EITHER GALVANIZED STEEL NOT LESS THAN 16 GAGE, OR ALUMINUM NOT LESS THAN 0.100 INCH THICKNESS.
3. BOLTS, NUTS AND WASHERS SHALL BE GALVANIZED OR CADMIUM PLATED.
4. ALL BRACKET HOLES ARE 3/16 INCH DIAMETER AND DELINEATOR POSTS REQUIRE AN ADDITIONAL HOLE 2 INCH BELOW THE TOP HOLE PROVIDED IN THE POST.
5. SHOP BEND THE BRACKET APPROX. 70 DEGREES AS SHOWN, ATTACH TO THE DELINEATOR POST WITH 3/16 INCH BOLTS AND FIELD BEND AS NECESSARY TO TRAFFIC ORIENT. THEN THE BRACKET REFLECTOR CAN BE ATTACHED WITH A 3/16 INCH BLIND EXPANSION RIVET OR A BOLT.
6. BURR THE THREADS OF ALL BOLTS TO PREVENT NUT LOOSENING OR VANDALISM.

BARRIER REFLECTOR NOTES

1. BARRIER REFLECTORS, REGARDLESS OF TYPE, SHALL MEET THE RETROREFLECTIVE QUALTITIES SPECIFIED IN SECTION 713 OF THE STANDARD SPECIFICATIONS FOR DELINEATOR REFLECTORS, AND BE PAID FOR AS DELINEATOR (TYPE _) (BARRIER) (EACH). USE OF THESE REFLECTORS IS MANDATORY.
2. THE COLOR OF REFLECTIVE SURFACE SHALL MATCH THE COLOR OF THE ADJACENT EDGE LINE.
3. CONCRETE SURFACE PREPARATION, ADHESIVE, AND METHOD OF APPLICATION SHALL BE AS RECOMMENDED BY THE REFLECTOR MANUFACTURER.
4. BARRIER REFLECTORS SHALL BE INSTALLED TO THE MEET MINIMUM SPACING REQUIREMENTS OF STANDARD TYPICAL DELINEATOR INSTALLATIONS. A 200 FOOT MAXIMUM TANGENT AND CURVE SPACING APPLIES TO BARRIER REFLECTORS, UNLESS OTHERWISE NOTED IN THE PLANS OR DIRECTED BY THE ENGINEER.
5. TOP MOUNT REFLECTORS ARE STANDARD. SIDEMOUNT BARRIER REFLECTORS OR 6 INCH WIDE REFLECTOR STRIPS MAY BE REQUIRED IF SPECIFIED IN THE PLANS.
6. MEDIAN BARRIER REFLECTORS SHALL BE TYPE II (YELLOW-YELLOW, BACK-TO-BACK).
7. FOR A TWO-WAY ROADWAY, BARRIER REFLECTORS SHALL BE TYPE II (CRYSTAL-CRYSTAL, BACK-TO-BACK).
8. FOR TEMPORARY CONCRETE BARRIER, BARRIER REFLECTORS SHALL BE INSTALLED TO MEET THE MINIMUM SPACING REQUIREMENTS OF STANDARD TYPICAL DELINEATOR INSTALLATIONS. THE MAXIMUM SPACING SHALL BE 50 FEET, AND THEY WILL NOT BE PAID FOR, BUT ARE INCLUDED IN THE WORK.

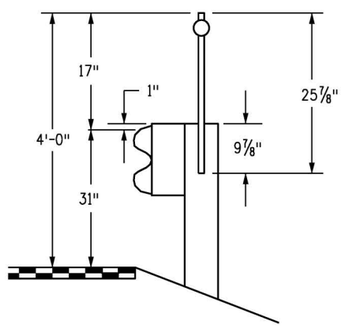

TYPICAL GUARDRAIL POST MOUNT DELINEATORS

POST MOUNT DELINEATORS SHALL BE ATTACHED BY A METHOD APPROVED BY THE ENGINEER OR A METHOD REQUIRED BY THE DEVICE MANUFACTURER.

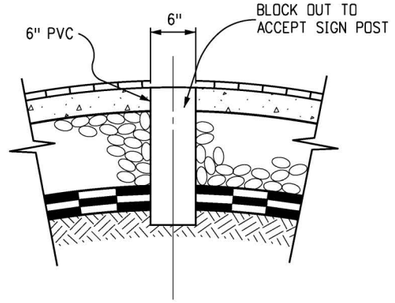

TYPICAL SLEEVE INSTALLATION FOR MEDIAN DELINEATOR POSTS

Computer File Information		Sheet Revisions	
Creation Date: 07/04/12		Date:	Comments
Created By: RPR	R-2	04/03/25	BARRIER REFLECTOR NOTES
Last Modification Date: 04/03/25	R-1	04/30/24	FORMATTING
Last Modified By: NRIVERA			
CAD Ver.: MicroStation V8 Scale: Not to Scale Units: English			

Colorado Department of Transportation
2829 W. Howard Pl.
Denver, CO 80204
Phone: 303-757-9654
FAX: 303-757-9219
Traffic Safety & Engineering EB

DELINEATOR INSTALLATIONS

Issued By: Traffic Safety & Engineering Branch July 31, 2019

STANDARD PLAN NO.
S-612-1
Standard Sheet No. 4 of 8
Project Sheet Number:

TYPICAL INSTALLATION DETAIL FOR CONTINUOUS CONCRETE BARRIER

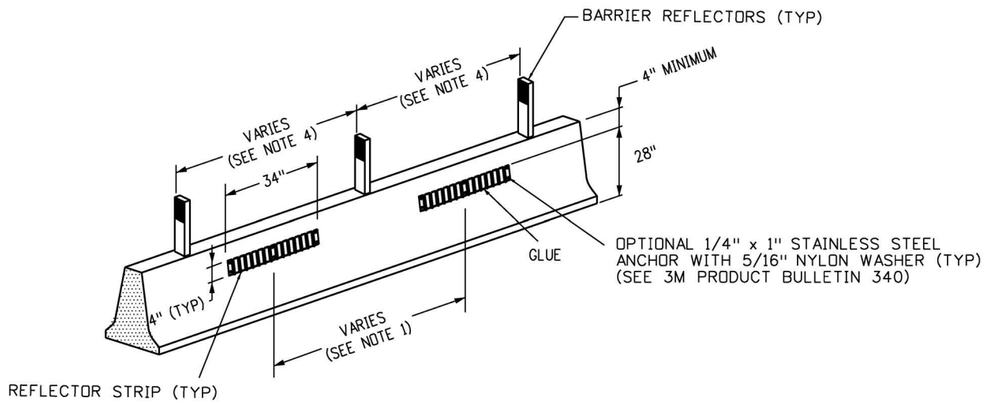

TYPICAL INSTALLATION DETAIL FOR GUARDRAIL TYPE 3

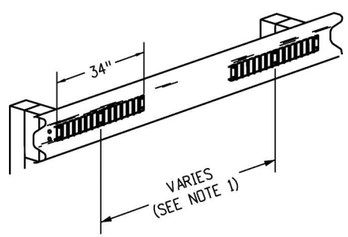

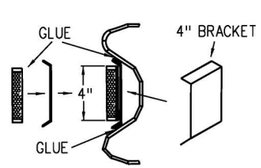

ATTACHMENT DETAILS

TYPICAL REFLECTOR STRIP INSTALLATION

1. REFLECTOR STRIPS SHALL BE SPACED AT INTERVALS OF 20 FEET OFF-CENTER FOR TANGENT SECTIONS OF BARRIER AND 10 FEET OFF-CENTER FOR CURVED SECTIONS OF BARRIER.
2. THIS DEVICE SHALL BE INSTALLED PER MANUFACTURER'S RECOMMENDATIONS. IT IS THE RESPONSIBILITY OF THE INSTALLER TO CONTACT THE MANUFACTURER REPRESENTATIVE WHENEVER THERE IS A QUESTION REGARDING APPLICATION PROCEDURES OR SUBSTRATE CONDITIONS.
3. THE COLOR OF THE RELECTIVE SURFACE SHALL MATCH THE COLOR OF THE ADJACENT ROADWAY EDGE LINE.
4. AT THE TIME OF INSTALLATION, THE CONTACTING SURFACE SHALL BE DRY AND MOISTURE-FREE.
5. AFTER REFLECTOR STRIP INSTALLATION, SURFACES SHOULD STAY DRY WITHOUT RAIN IN THE FORECAST FOR AT LEAST 8 HOURS.
6. SURFACE PREPARATION, BRACKETS, BOLTS, AND GLUE (OR EQUIVALENT) SHALL BE INCLUDED IN THE COST OF EACH DELINEATOR STRIP.

CONCRETE BARRIER NOTES

1. CONCRETE SURFACE PREPARATION, ADHESIVE, AND METHOD OF APPLICATION SHALL BE AS RECOMMENDED BY THE REFLECTOR MANUFACTURER.
2. TO ASSUME A STRAIGHT, LEVEL APPLICATION, SNAP A CHALK LINE ACROSS THE BARRIER.
3. FOR MOUNTING THE REFLECTOR STRIP TO CONCRETE BARRIER, INCLUDING THE BRACKETS, THE USE OF 3M WINDO-WELD SUPER FAST URETHANE GLUE OR EQUIVALENT APPLIED AT 60 DEGREES FAHRENHEIT IN DRY WEATHER IS RECOMMENDED. THIS PRODUCT IS AVAILABLE IN A STANDARD CAULKING TUBE AND SHOULD BE APPLIED TO THE BRACKETS AND PANELS WITH A CONSTRUCTION STYLE CAULKING GUN, AND/OR USE 1/4" x 1" STAINLESS STEEL ANCHOR WITH 5/16 INCH NYLON WASHER, AS SPECIFIED IN 3M PRODUCT BULLETIN 340.
4. BARRIER REFLECTORS SHALL BE INSTALLED TO MEET THE MINIMUM SPACING REQUIREMENTS OF STANDARD TYPICAL DELINEATOR INSTALLATIONS. A 200-FOOT MAXIMUM TANGENT AND CURVE SPACING APPLIES TO BARRIER REFLECTORS ALONG THE TOP OF THE BARRIER, UNLESS OTHERWISE NOTED IN THE PLANS OR DIRECTED BY THE ENGINEER.

GUARDRAIL TYPE 3 NOTES

1. THE USE OF REFLECTOR STRIPS ON GUARDRAIL TYPE 3 IS SUPPLEMENTAL TO THE REFLECTOR TAB.
2. TWO DIFFERENT STYLES OF MOUNTING BRACKETS ARE AVAILABLE. THERE IS ONE TYPE FOR THE 4-INCH REFLECTOR STRIP AND ANOTHER FOR THE 6-INCH REFLECTOR STRIP. THE BRACKETS MUST BE MATCHED TO FIT THE EXACT 4-INCH OR 6-INCH REFLECTOR STRIP PANEL. THE 4-INCH REFLECTOR STRIP SIZE IS TYPICAL, HOWEVER, 1.5-INCH OR 6-INCH REFLECTOR STRIPS MAY BE INSTALLED AS SPECIFIED IN THE PLANS.
3. METAL GUARDRAIL SHALL BE WIRE BRUSHED/SANDED, THEN CLEANED WITH ISOPROPYL ALCOHOL WHERE THE BRACKETS WILL ADHERE TO THE GUARDRAIL.
4. FOR MOUNTING THE REFLECTOR STRIP TO GUARDRAIL, INCLUDING THE BRACKETS, THE USE OF 3M WINDO-WELD SUPER FAST URETHANE GLUE OR EQUIVALENT APPLIED AT 60 DEGREES FAHRENHEIT IN DRY WEATHER IS RECOMMENDED. THIS PRODUCT IS AVAILABLE IN A STANDARD CAULKING TUBE AND SHOULD BE APPLIED TO THE BRACKETS AND PANELS WITH A CONSTRUCTION STYLE CAULKING GUN, AND/OR USE 1/4 INCH x 1 INCH STAINLESS STEEL ANCHOR WITH 5/16 INCH NYLON WASHER, AS SPECIFIED IN 3M PRODUCT BULLETIN 340.
5. INSTALLATION REQUIRES THE USE OF THREE BRACKETS (MINIMUM) PER REFLECTOR STRIP CORRESPONDING TO THE PRE-DRILL REFLECTOR STRIP HOLES.

Computer File Information		Sheet Revisions	
Creation Date: 07/04/12		Date:	Comments
Created By: RPR	R-1	04/03/25	BARRIER REFLECTOR NOTES
Last Modification Date: 04/03/25			
Last Modified By: NRIVERA			
CAD Ver.: MicroStation V8 Scale: Not to Scale Units: English			

Colorado Department of Transportation
2829 W. Howard Pl.
Denver, CO 80204
Phone: 303-757-9654
FAX: 303-757-9219
Traffic Safety & Engineering EB

DELINEATOR INSTALLATIONS

Issued By: Traffic Safety & Engineering Branch July 31, 2019

STANDARD PLAN NO.
S-612-1
Standard Sheet No. 5 of 8
Project Sheet Number:

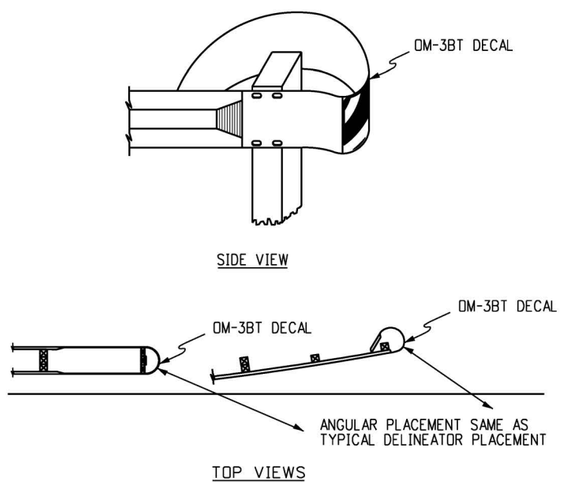

BUFFER TERMINALS (BT)

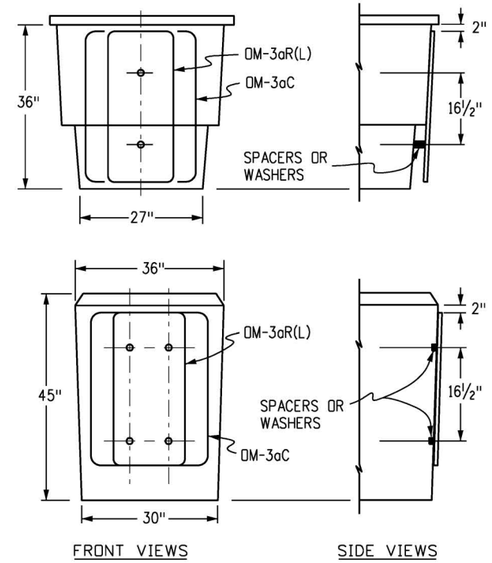

IMPACT ATTENUATOR (SAND FILLED)

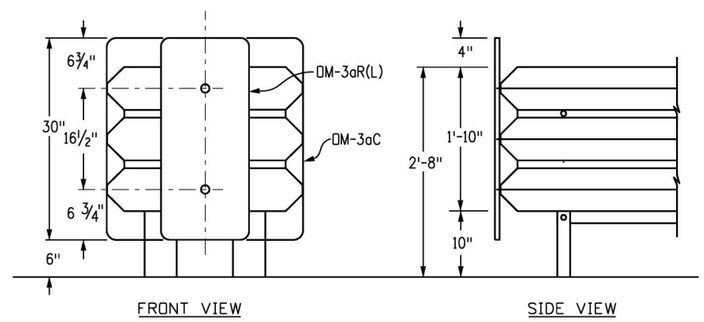

IMPACT ATTENUATOR (MODULAR)

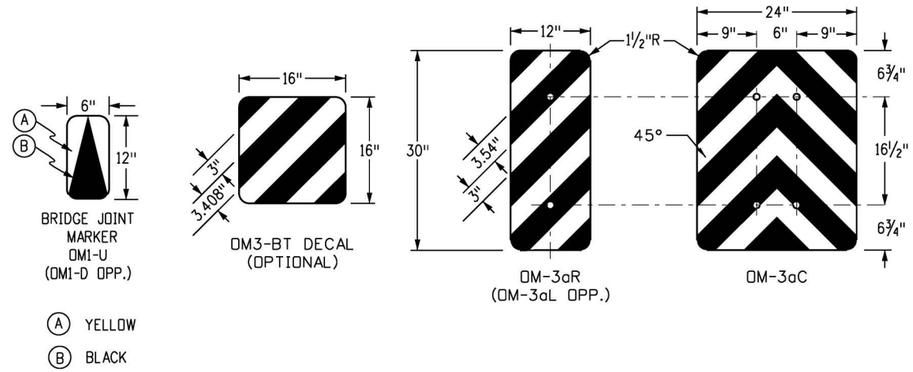

SUPPLEMENTAL DELINEATION DETAILS

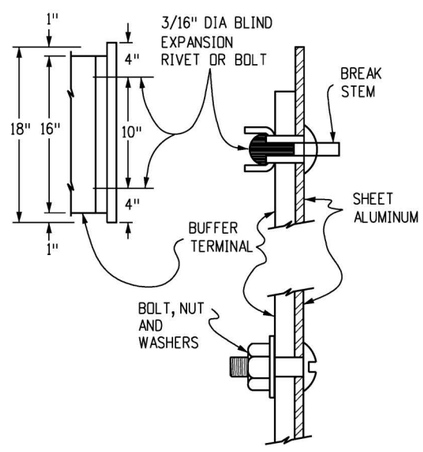

BUFFER PANEL ATTACHMENT DETAILS

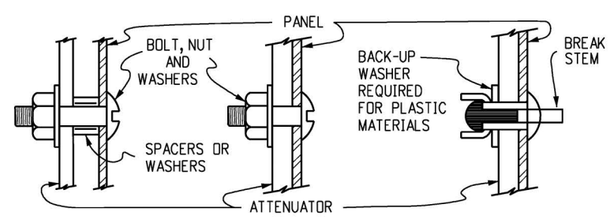

ATTENUATOR PANEL ATTACHMENT DETAILS

SUPPLEMENTAL PANEL NOTES

1. ALL SUPPLEMENTAL DELINEATION PANELS SHALL BE SINGLE SHEET ALUMINUM, 0.080" MINIMUM THICKNESS.
2. A) PANELS SHALL BE FASTENED DIRECTLY TO THE IMPACT ATTENUATOR WITH 2 OR 4-3/16 INCH DIAMETER BLIND EXPANSION RIVETS, OR 2 OR 4-3/16 INCH BOLTS, NUTS AND WASHERS.

   B) EXPANSION RIVETS SHALL BE DOMED HEAD ALUMINUM WITH ALUMINUM BREAK STEM MANDREL, AND SHALL HAVE A BACK-UP WASHER WHEN USED WITH PLASTIC MATERIALS.

   C) BOLTS, NUTS AND WASHERS SHALL BE GALVANIZED OR CADMIUM PLATED.

   D) SPACERS, OR SPACING WASHERS SHALL BE USED AS NECESSARY FOR SAND FILLED ATTENUATORS.
3. OM-3BT DECAL (BUFFER TERMINAL OBJECT MARKER) SHALL BE PRESSURE SENSITIVE REFLECTIVE SHEETING AND SHALL BE APPLIED DIRECTLY TO THE GUARDRAIL END TREATMENT (FLARED OR NON-FLARED).
4. RETROREFLECTIVE SHEETING SHALL CONFORM TO ASTM D4956, TYPE IV. THE SHEETING SHALL BE YELLOW FOR PERMANENT INSTALLATIONS.

   OM-3BT DECAL AND OM-3aR(L)(C) PANELS SHALL HAVE YELLOW SHEETING BACKGROUND WITH STENCIL BLACK STRIPES.

   THE SHEETING FOR TEMPORARY (CONSTRUCTION ZONE) INSTALLATIONS SHALL BE AS FOLLOWS:

   OM-3BT DECAL AND OM-3aR(L)(C) PANELS SHALL HAVE ALTERNATING ORANGE AND WHITE REFLECTORIZED STRIPES.
5. SUPPLEMENTAL DELINEATION PANELS OR PRESSURE SENSITIVE RETROREFLECTIVE SHEETING DECALS SHALL BE INCLUDED IN THE COST OF THE GUARDRAIL END ANCHOR OR THE IMPACT ATTENUATOR ITEM.
6. REFERENCE SHEET S-612-1 SHEET 7 OF 8 FOR BASE DETAIL

SUPPLEMENTAL DELINEATION FOR GUARD RAIL
BUFFER TERMINALS AND IMPACT ATTENUATORS

Computer File Information		Sheet Revisions	
Creation Date: 07/04/12		Date:	Comments
Created By: RPR	R-2	04/03/25	FORMATTING
Last Modification Date: 04/03/25	R-1	04/30/24	REVISED BRIDGE JOINT MARKER
Last Modified By: NRIVERA			
CAD Ver.: MicroStation V8 Scale: Not to Scale Units: English			

Colorado Department of Transportation
2829 W. Howard Pl.
Denver, CO 80204
Phone: 303-757-9654
FAX: 303-757-9219
Traffic Safety & Engineering EB

DELINEATOR INSTALLATIONS

Issued By: Traffic Safety & Engineering Branch July 31, 2019

STANDARD PLAN NO.
S-612-1
Standard Sheet No. 6 of 8
Project Sheet Number:

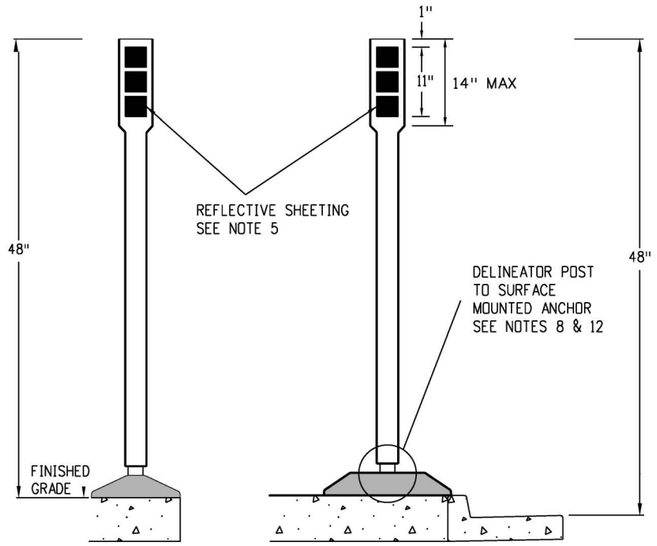

SURFACE MOUNTED

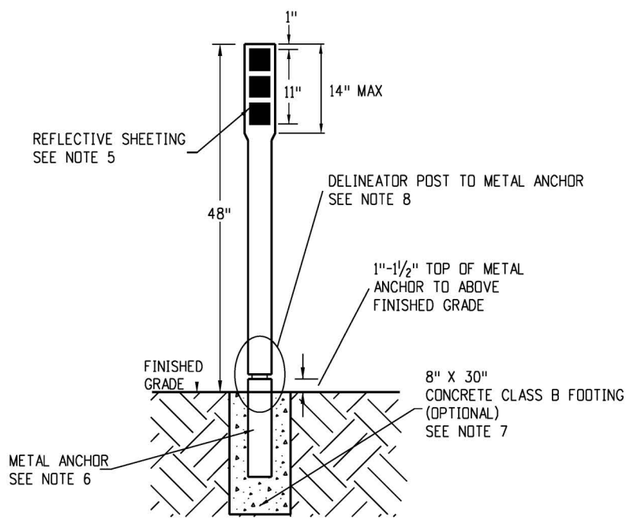

TYPICAL SOIL CONDITIONS

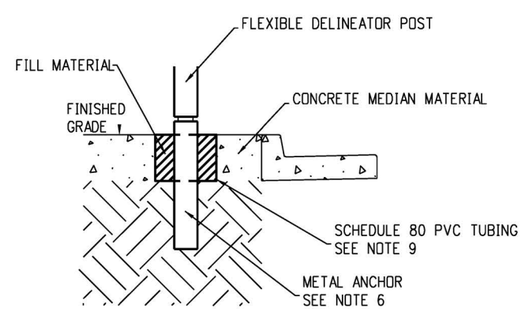

CONCRETE MEDIAN MATERIAL

DRIVEABLE METHOD

FLEXIBLE DELINEATOR NOTES

1. FLEXIBLE DELINEATOR POSTS SHALL FOLLOW THE REQUIREMENTS AS OUTLINED IN CDOT'S MOST RECENT VERSION OF THE "STANDARD SPECIFICATIONS FOR ROAD AND BRIDGE CONSTRUCTION". FLEXIBLE DELINEATOR POSTS SHALL BE LISTED ON CDOT'S "APPROVED PRODUCTS LIST" PRIOR TO INSTALLATION.
2. THE LENGTH OF THE FLEXIBLE DELINEATOR POST SHALL BE INSTALLED AS TO PROVIDE A HEIGHT OF 48 INCHES ABOVE THE EDGE OF PAVEMENT.
3. FLEXIBLE DELINEATOR POSTS SHALL BE INSTALLED SO THAT THE REFLECTIVE ELEMENTS FACE ONCOMING TRAFFIC.
4. REFLECTIVE ELEMENTS SHALL BE PRE-INSTALLED AT THE MANUFACTURER'S FACILITY.
5. REFLECTIVE ELEMENTS (SHEETING) SHALL BE TYPE IV OR TYPE V. REFLECTIVE SHEETS SHALL BE 3 INCH SQUARED. REFLECTIVE SHEETS SHALL BE PLACED IN A STRAIGHT VERTICAL COLUMN STARTING 1 INCH FROM THE TOP EDGE AND SEPARATED BY 1 INCH VERTICALLY IN THE COLUMN. SHEETING QUANTITY AND COLOR ARE DEPENDENT ON THE LOCATION OF THE DELINEATOR. SEE SHEET 2 OF S-612-01 FOR TYPICAL CONFIGURATIONS.
6. THE METAL ANCHOR SHALL BE 2 INCH GALVANIZED STEEL PERFORATED SQUARE TUBING MEASURING 24 INCHES IN LENGTH AND SHALL HAVE AN ANCHORING DEPTH OF 22 1/2 TO 23 INCHES.
7. WHEN A CONCRETE BASE IS REQUIRED OR AS DIRECTED BY THE ENGINEER, THE METAL ANCHOR SHALL BE ENCASED IN AN 8 INCH DIAMETER BY 30 INCH DEPTH CONCRETE CLASS B FOOTING. CONCRETE SHALL BE INCLUDED IN THE COST OF THE PAY ITEM.
8. THE CONNECTION BETWEEN THE FLEXIBLE DELINEATOR POST AND THE METAL ANCHOR IS PRODUCT SPECIFIC. ALL FLEXIBLE DELINEATOR POSTS SHALL BE INSTALLED PER MANUFACTURER'S INSTRUCTIONS.
9. CONCRETE MEDIAN INSTALLATIONS SHALL INCLUDE A 4 INCH DIAMETER SCHEDULE 80, PVC TUBE. THE TUBE LENGTH SHALL MATCH THE THICKNESS OF THE CONCRETE MEDIAN MATERIAL, BE CUT FLUSH WITH THE CONCRETE, AND BE BACKFILLED WITH SOIL.
10. "DRIVABLE METHOD" IS THE PREFERRED INSTALLATION METHOD FOR GROUND INSTALLATIONS.
11. "SURFACE MOUNTED" INSTALLATION SHALL ONLY BE INSTALLED DURING RETROFIT APPLICATIONS OR AS DIRECTED BY THE ENGINEER.
12. SURFACE MOUNTED DELINEATORS SHOULD ONLY BE UTILIZED FOR TEMPORARY CONFIGURATIONS DURING CONSTRUCTION. SURFACE MOUNTED DELINEATORS MAY BE UTILIZED FOR CURB AND GUTTER APPLICATIONS; HOWEVER, THE DRIVABLE METHOD IS PREFERRED. SURFACE MOUNTED BASES SHALL BE ATTACHED TO THE SURFACE VIA EITHER BOLT DOWN OR GLUE DOWN METHODS.

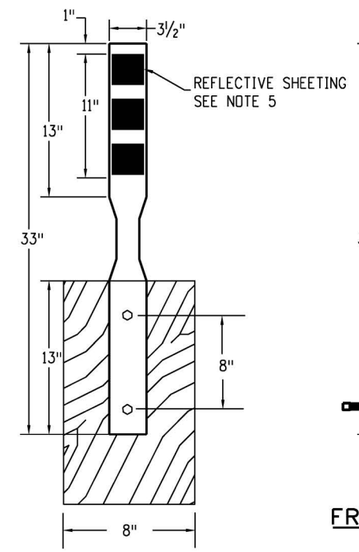

POST MOUNTED

GUARDRAIL

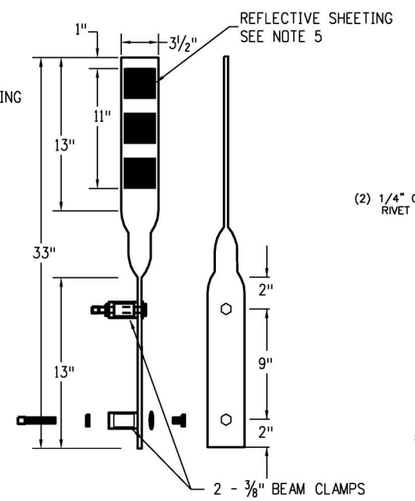

FRONT AND SIDE VIEW

CLAMP MOUNTED

CABLE RAIL

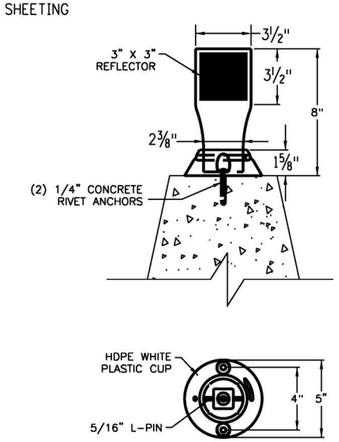

FRONT AND TOP VIEW

CUP MOUNTED

CONCRETE BARRIER

FLEXIBLE DELINEATOR INSTALLATIONS

Computer File Information		Sheet Revisions	
Creation Date: 07/04/12		Date:	Comments
Created By: RPR	R-2	11/07/23	GENERAL NOTES REPLACED WITH FLEXIBLE DELINEATOR NOTES
Last Modification Date: 04/03/25			
Last Modified By: NRIVERA	R-1	01/19/23	UPDATED PAGE LAYOUT AND GENERAL NOTES UPDATED TYPICAL DRAWINGS ADDED CONCRETE MEDIAN MATERIAL
CAD Ver.: MicroStation V8 Scale: Not to Scale Units: English			

Colorado Department of Transportation
2829 W. Howard Pl.
Denver, CO 80204
Phone: 303-757-9654
FAX: 303-757-9219
Traffic Safety & Engineering EB

DELINEATOR INSTALLATIONS

Issued By: Traffic Safety & Engineering Branch July 31, 2019

STANDARD PLAN NO.
S-612-1
Standard Sheet No. 7 of 8
Project Sheet Number:

MEDIAN CROSSOVER NOTES

1. MOUNTING HEIGHT TO BOTTOM OF R11-50, "EMERGENCY AND AUTHORIZED VEHICLES ONLY" SIGN, SHALL BE 7 FEET FROM ORIGINAL GROUND.
2. SEE TUBULAR STEEL SIGN SUPPORT DETAILS (S-614-8) FOR CONCRETE FOOTING INFORMATION FOR SOCKET SYSTEM INSTALLATIONS AND ADDITIONAL POST INSTALLATION REQUIREMENTS.
3. PLACE SIX (6) MEDIAN CROSSOVER DELINEATORS, ONE 500 FEET IN ADVANCE OF MEDIAN CROSSOVER AND ONE ON EACH SIDE OF CROSSOVER AS SHOWN ON DETAIL.
4. FOR VISUALLY CONSTRAINED MEDIAN CROSSOVERS, MULTIPLE SIGN PANELS (R3-4 AND R11-50) MAY NEED TO BE PLACED WITHIN THE CROSSOVER ON SEPARATE POSTS, AS DIRECTED BY THE ENGINEER.
5. THE POLYETHRYLENE PLASTIC PANEL MAY BE USED ON EITHER POLYPROPLENE BLEND POST AND/OR P-POST INSTALLATIONS. IN CONTRAST, THE CLASS I SIGN PANEL SHALL ONLY BE USED ON P-POST INSTALLATIONS.

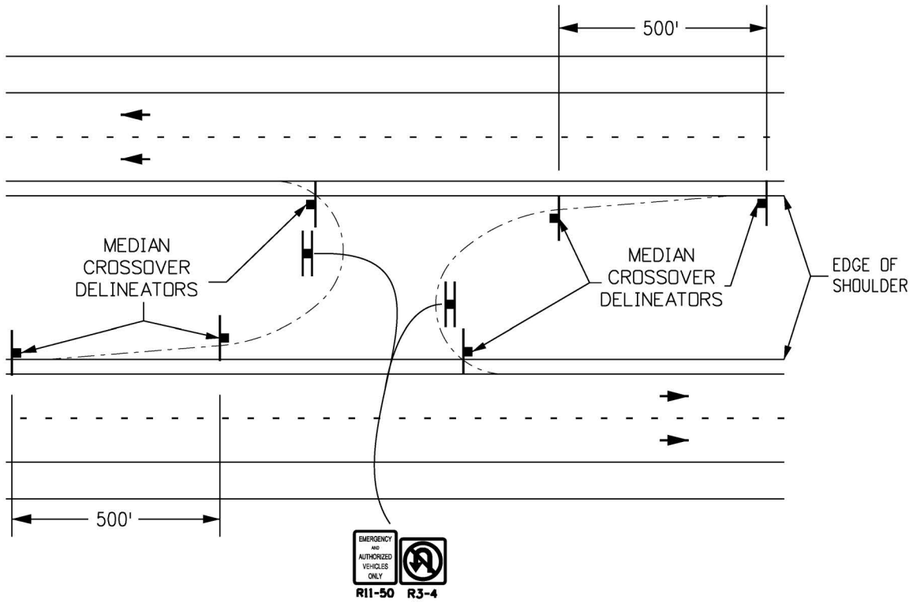

MEDIAN WIDTH GREATER THAN 50 FT.

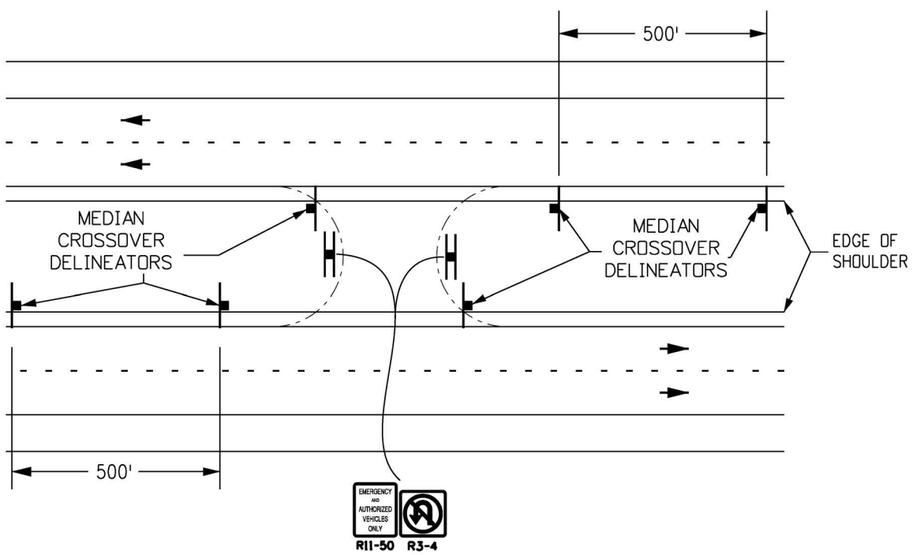

MEDIAN WIDTH LESS THAN 50 FT.

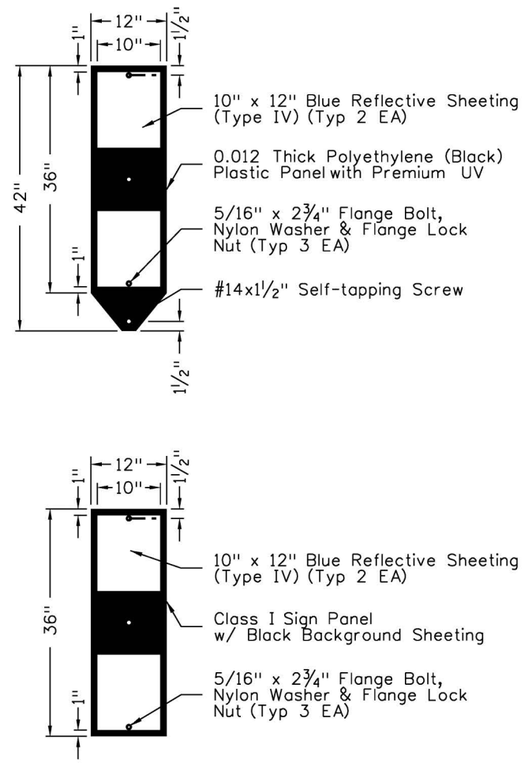

MEDIAN CROSSOVER DELINEATORS

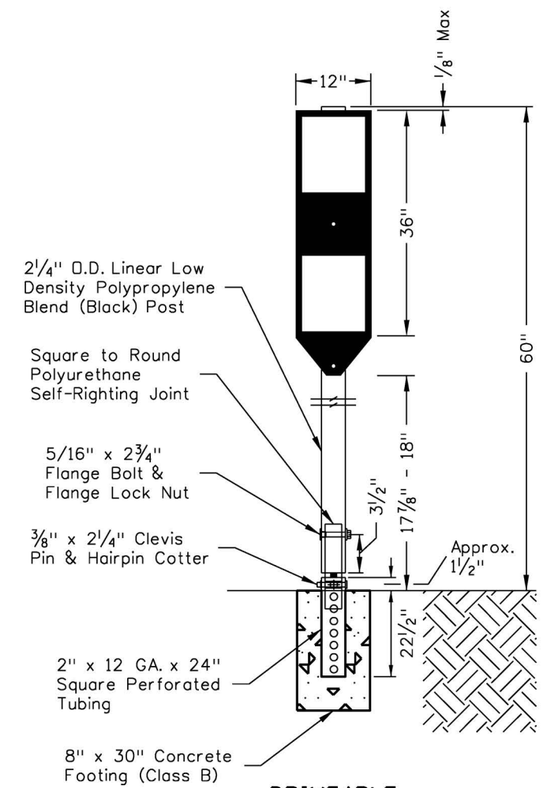

DRIVEABLE (PREFERRED)

SOCKET SYSTEM (ALTERNATE)

MEDIAN CROSSOVER INSTALLATIONS

Computer File Information		Sheet Revisions	
Creation Date: 04/12/18		Date:	Comments
Created By: DiNARDO	R-2	04/30/24	FORMATTING
Last Modification Date: 04/03/25	R-1	11/07/23	RENAMED CROSSOVER MARKERS TO MEDIAN CROSSOVER DELINEATORS
Last Modified By: NRIVERA			
CAD Ver.: MicroStation V8 Scale: Not to Scale Units: English			

Colorado Department of Transportation
2829 W. Howard Pl.
Denver, CO 80204
Phone: 303-757-9654
FAX: 303-757-9219
Traffic Safety & Engineering EB

DELINEATOR INSTALLATIONS

Issued By: Traffic Safety & Engineering Branch July 31, 2019

STANDARD PLAN NO.
S-612-1
Standard Sheet No. 8 of 8
Project Sheet Number:

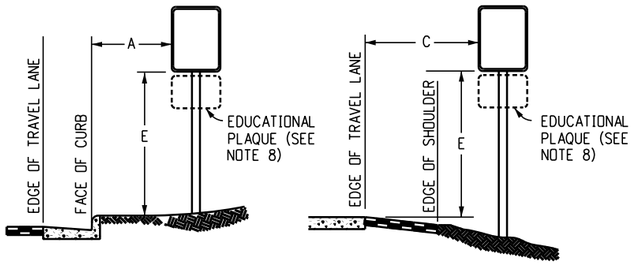

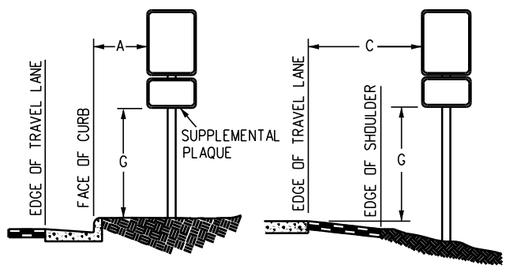

REGULATORY, RECREATIONAL AND CULTURAL INFORMATION SIGN PLACEMENT

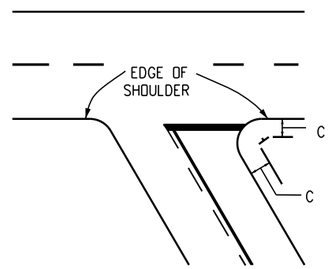

ACUTE ANGLE INTERSECTION

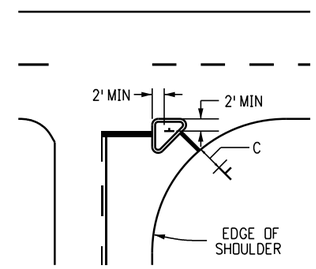

CHANNELIZED INTERSECTION

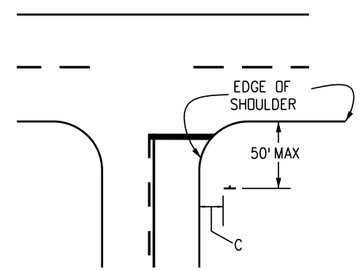

WIDE THROAT INTERSECTION

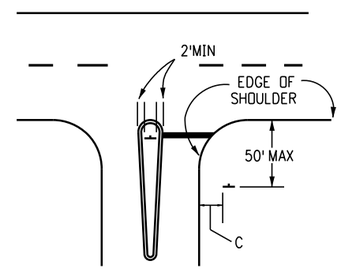

DIVISIONAL ISLAND

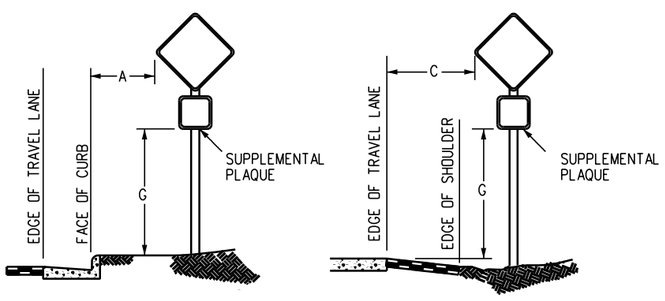

WARNING SIGN PLACEMENT

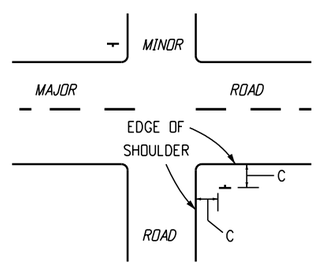

MINOR CROSSROAD

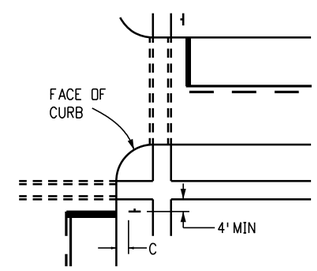

URBAN INTERSECTION

TYPICAL LOCATIONS-STOP SIGNS AND YIELD SIGNS

GENERAL NOTES

1. THE ENGINEER WILL ESTABLISH GRADES AND LOCATIONS FOR ALL SIGN POSTS IN ACCORDANCE WITH DETAILS SHOWN ON THE PLANS.
2. SPECIAL CARE SHALL BE TAKEN IN SIGN LOCATION TO ENSURE AN UNOBSTRUCTED VIEW OF EACH SIGN.
3. MINIMUM POST EMBEDMENT SHALL BE 3 FEET FOR U-2 POSTS AND 4-INCH X 4-INCH TIMBER POSTS, AND 5 FEET FOR 6-INCH X 6-INCH TIMBER POSTS. SEE S-614-6 AND S-614-8 FOR FOOTING DEPTH. 6-INCH BY 6-INCH TIMBER POSTS SHALL BE PROVIDED WITH TWO 2-INCH DIAMETER HOLES THROUGH THE NEUTRAL AXIS AT RIGHT ANGLES TO THE ROADWAY FOR INDUCED BREAKAWAY FUNCTION, ONE DRILLED AT 4 INCHES AND ONE AT 18 INCHES ABOVE THE GROUND LEVEL.
4. IF A SHOULDER IS WIDER THAN 6 FEET, THE MINIMUM LATERAL OFFSET DISTANCE SHOULD BE 6 FEET FROM THE EDGE OF SHOULDER, EXCEPT FOR MILE MARKER SIGNS. SEE FIGURE 2A-2(B) OF THE MUTCD.
5. NORMAL LATERAL PLACEMENT IS MEASURED FROM THE EDGE OF THE TRAVEL LANE.
6. IN URBAN AREAS, A LATERAL CLEARANCE OF 1 FOOT FROM THE CURB FACE IS PERMISSIBLE WHERE SIDEWALK WIDTH IS LIMITED OR WHERE EXISTING POLES ARE CLOSE TO THE CURB.
7. TYPICAL POST MOUNTING HEIGHTS FROM GROUND TO BOTTOM OF SIGN PANEL ARE 7 OR 8 FEET. OTHER HEIGHTS MAY BE REQUIRED WHEN SIGNS ARE MOUNTED ON STEEPER FILL OR CUT SLOPES.
8. "EDUCATIONAL PLAQUES" ACCOMPANYING SYMBOL SIGNS WILL NOT BE CONSIDERED WHEN DETERMINING THE VERTICAL PLACEMENT OF SYMBOL SIGNS. FOR INFORMATION OF EDUCATIONAL PLAQUES, SEE PAGE 3 OF THE 2021 CDOT GUIDE SIGNING POLICIES & PROCEDURES, AND SECTION 2M.06 OF THE MUTCD.
9. WHEN LATERAL PLACEMENT IS 30 FEET OR MORE FOR SIGNS WITHOUT A SUPPLEMENTAL PLAQUE, VERTICAL PLACEMENT D MAY BE REDUCED TO 5 FT WHEN LATERAL PLACEMENT IS 30 FEET OR MORE FOR SIGNS WITH A SUPPLEMENTAL PANEL, VERTICAL PLACEMENT F DOES NOT DOES NOT APPLY - USE ONLY VERTICAL PLACEMENT H.
10. NORMAL ANGULAR PLACEMENT IS 0 DEGREES. SIGNS CLOSER THAN 30 FEET SHOULD BE TURNED SLIGHTLY AWAY TO MINIMIZE SPECULAR REFLECTION. SIGNS PLACED 30 FEET OR MORE SHOULD GENERALLY BE TURNED TOWARD THE ROAD.
11. THE EXIT PANEL IS MOUNTED ON THE RIGHT HAND SIDE FOR RIGHT HAND EXITS AND THE LEFT HAND SIDE FOR LEFT HAND EXITS.
12. POST SHALL BE INSTALLED PLUMB, VERTICAL DEVIATION SHALL NOT EXCEED ½-INCH IN 10 FT.
13. ON ALL TWO-LANE, UNDIVIDED HIGHWAYS, THE MILE MARKER AND POST SHALL BE INSTALLED ON THE RIGHT SHOULDER IN THE ASCENDING DIRECTION WITH THE MILE MARKER PANELS DISPLAYED ON THE FRONT AND BACK SIDE OF THE POST.
14. ON ALL UNDIVIDED MULTI-LANE AND DIVIDED HIGHWAYS, AND INTERSTATES, THE MILE MARKER AND POST SHALL BE INSTALLED ON THE OUTSIDE SHOULDER (OR SIDEWALK IF APPLICABLE) IN BOTH DIRECTIONS OF TRAVEL.
15. VERTICAL SPACING BETWEEN SIGN PANELS SHALL BE 1 TO 1½ INCH, TYPICAL.
16. THE MOUNTING HEIGHT OF CROSSBUCK SIGNS, MEASURED VERTICALLY FROM THE CENTER BOTTOM OF THE SIGN TO THE ELEVATION OF THE NEAR EDGE OF THE PAVEMENT, SHOULD BE APPPROXIMATELY 7 FEET, EXCEPT AS OTHERWISE PROVIDED IN THE COLORADO SUPPLEMENT TO SECTION 8B.03 OF THE MUTCD.

PLACEMENT TABLES

LATERAL PLACEMENT		
KEY	ALL CLASSES OF STREETS AND HIGHWAYS	
	MINIMUM	NORMAL
A	2'-0"	15'-0" PLUS CURB
B	2'-0"	30'-0" OR MORE INCLUDES CURB
C	2'-0"	6'-0" PLUS EDGE OF 6'+ WIDE SHOULDER. IF NONE, 15'-0" FROM EDGE OF TRAVEL LANE.

VERTICAL PLACEMENT						
KEY	FREEWAYS AND EXPRESSWAYS		COVENTIONAL STREETS AND HIGHWAYS			
	MIN.	MAX.	URBAN		RURAL	
			MIN.	MAX.	MIN.	MAX.
D	7'-0" OR NOTE NO. 9	12'-0"	7'-0"	8'-0"	5'-0"	8'-0"
E	7'-0"	8'-0"	7'-0"	8'-0"	5'-0"	8'-0"
F	8'-0" OR NOTE NO. 9	12'-0"	8'-0"	9'-0"	5'-0"	9'-0"
G	6'-0"	7'-0"	6'-0"	7'-0"	4'-0"	7'-0"
H	5'-0"	10'-0"	6'-0"	7'-0"	4'-0"	7'-0"

Computer File Information	
Creation Date: 07/04/12	
Created By: KCM	
Last Modification Date: 01/09/26	
Last Modified By: GYDAKUM	
CAD Ver.: MicroStation V8 Scale: Not to Scale Units: English	

	Sheet Revisions	
	Date:	Comments
R-2	01/09/26	MUTCD REFERENCES UPDATED AND NOTE 16 ADDED
R-1	03/01/24	Revised notes 3 and 8.

Colorado Department of Transportation
2829 W. Howard Pl.
Denver, CO 80204
Phone: 303-757-9654
FAX: 303-757-9219
Traffic Safety & Engineering EB

GROUND SIGN PLACEMENT

Issued By: Traffic Safety & Engineering Branch July 31, 2019

STANDARD PLAN NO.
S-614-1
Standard Sheet No. 1 of 2
Project Sheet Number:

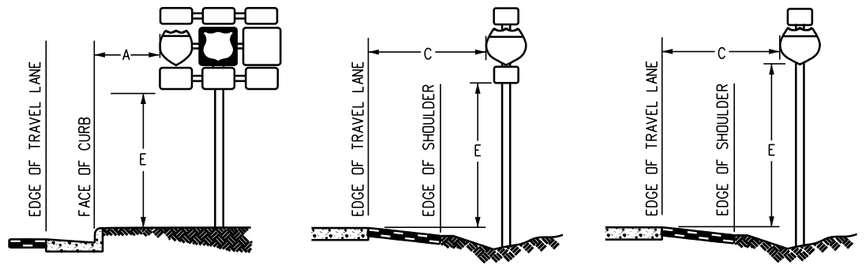

ROUTE MARKER ASSEMBLY PLACEMENT

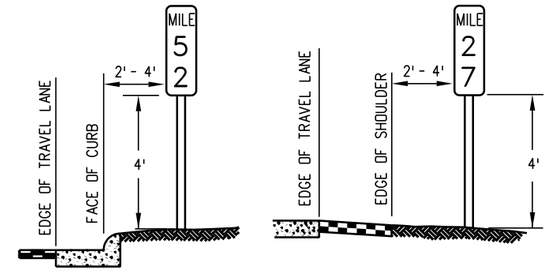

NOTE: MILE MARKERS SHALL BE LOCATED IN LINE WITH DELINEATOR POSTS.

MILE MARKER PLACEMENT

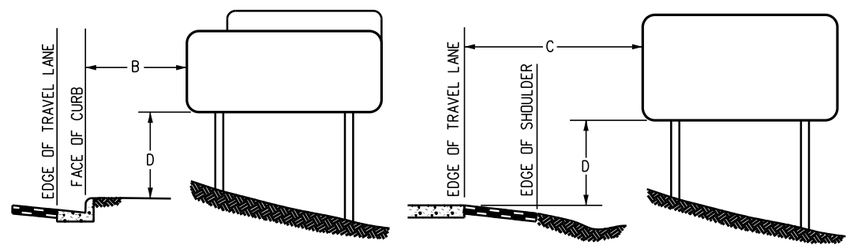

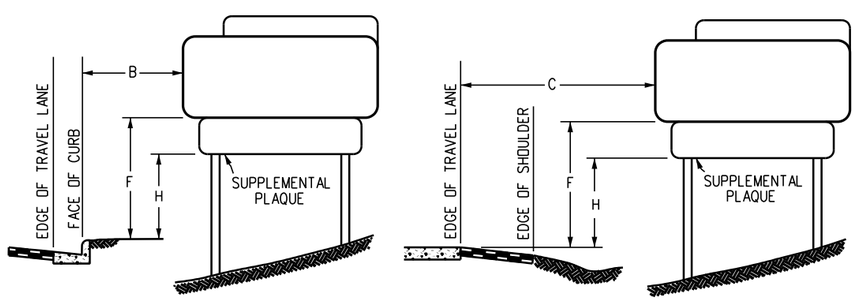

CLASS III SIGN PLACEMENT

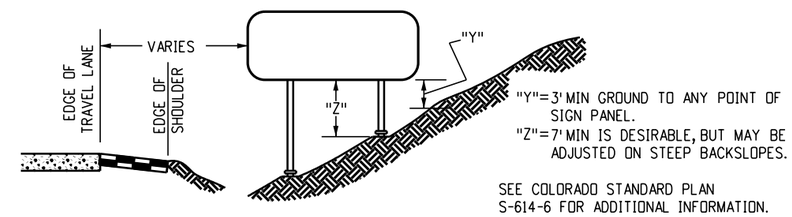

CLASS III SIGNS, PANEL GROUND CLEARANCE

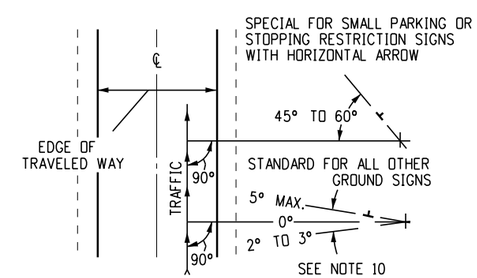

ANGULAR PLACEMENT

Computer File Information		Sheet Revisions	
Creation Date: 07/04/12		Date:	Comments
Created By: KCM	R-1	03/01/24	Revised standard reference note for "Class III Signs, Panel Ground Clearance" detail.
Last Modification Date: 03/01/24			
Last Modified By: YSaucedo			
CAD Ver.: MicroStation V8 Scale: Not to Scale Units: English			

Colorado Department of Transportation
2829 W. Howard Pl.
Denver, CO 80204
Phone: 303-757-9654
FAX: 303-757-9219
Traffic Safety & Engineering EB

GROUND SIGN PLACEMENT

Issued By: Traffic Safety & Engineering Branch July 31, 2019

STANDARD PLAN NO.
S-614-1
Standard Sheet No. 2 of 2
Project Sheet Number:

TYPICAL SINGLE BRACKET

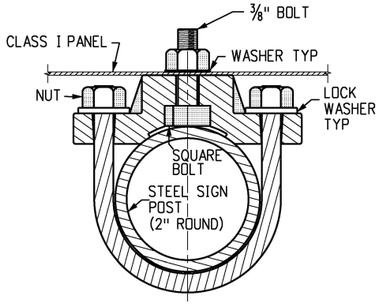

TYPICAL BACK TO BACK

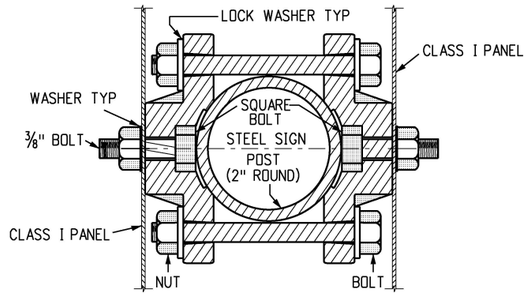

TYPICAL ROUND STEEL POLE SECTION

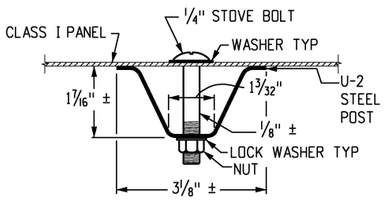

TYPICAL U-2 POST SECTION

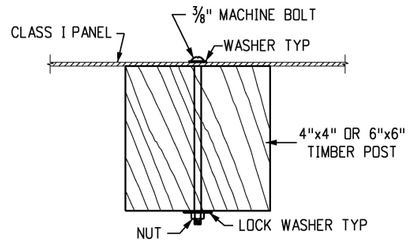

TYPICAL TIMBER POST SECTION

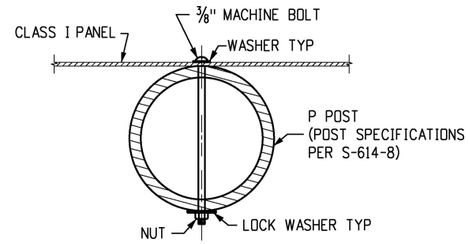

TYPICAL P POST SECTION

GENERAL NOTES

1. TIMBER SIGN POSTS MAY ONLY BE USED FOR TEMPORARY SIGNAGE DURING CONSTRCTION. TUBULAR STEEL SHALL BE USED FOR PERMANENT INSTALLATIONS.
2. CLASS I SIGN PANELS ARE THOSE THAT DO NOT REQUIRE BACKING ZEES. SIGN PANELS UP TO 60 INCHES IN WIDTH MAY BE ATTACHED DIRECTLY TO T BRACKETS. SIGN PANELS UP TO 48 INCHES IN WIDTH MAY BE ATTACHED DIRECTLY TO U BRACKETS. CLASS I SIGN PANELS SHALL BE 0.10 INCHES MINIMUM THICKNESS SINGLE SHEET ALUMINUM.
3. CLASS I SIGN PANELS SHALL BE FASTENED TO THE U-2 POST WITH 1/4 INCH DIAMETER STOVE BOLTS AND TO TIMBER POSTS AND P POST WITH 3/8 INCH DIAMETER MACHINE BOLTS. SEE STANDARD PLANS S-614-20 AND S-614-22 FOR EXCEPTIONS.
4. A WASHER WITH A DIAMETER OF 1.25 INCHES SHALL BE PLACED BETWEEN THE BOLT HEAD AND THE FACE OF THE SIGN PANEL. THE WASHER SHALL NOT COVER ANY LETTERING ON THE SIGN PANEL THAT COULD CONFUSE THE TRAVELING PUBLIC. A 1 INCH DIAMETER WASHER SHALL BE PLACED BETWEEN THE NUT AND TIMBER POST.
5. BOLTS, NUTS AND WASHERS SHALL BE GALVANIZED OR CADMIUM PLATED.
6. THE RETREOFLECTIVE SHEETING SHALL BE ON THE DEPARTMENT'S APPROVED PRODUCT LIST.
7. FOR SIGN PLACEMENT SEE STANDARD PLAN S-614-1.
8. U-2 POSTS MAY ONLY BE USED FOR DELINEATORS, MILE MARKERS AND STRUCTURE NUMBER PLAQUES. "U" SHAPE STEEL POSTS SHALL BE A UNIFORM FLANGED CHANNEL SECTION MADE FROM HOT ROLLED STRUCTURAL STEEL, RE-ROLLED RAIL STEEL, OR NEW BILLET STEEL HAVING A MINIMUM YIELD STRENGTH OF AT LEAST 30,000 PSI, AND A MINIMUM TENSILE STRENGTH OF AT LEAST 50,000 PSI. U" SHAPE POSTS SHALL WEIGH 2 LBS/FT, EXCEPT THAT A MILL TOLERANCE OF MINUS 3% OF THE WEIGHT OF ANY ONE POST WILL BE ALLOWED. "U" SHAPE POSTS SHALL HAVE INCH HOLES DRILLED OR PUNCHED ON 1 INCH OR 2 INCH CENTERS FOR THE TOP 4 FEET OF THE POST AS A MINIMUM, WITH THE FIRST HOLE 1 INCH FROM THE TOP OF THE POST. COLOR OF POSTS SHALL BE INTERSTATE GREEN.
9. VERTICAL SPACING BETWEEN PANELS ON THE SAME POST SHALL BE 1 INCH TO 1 1/2 INCH.

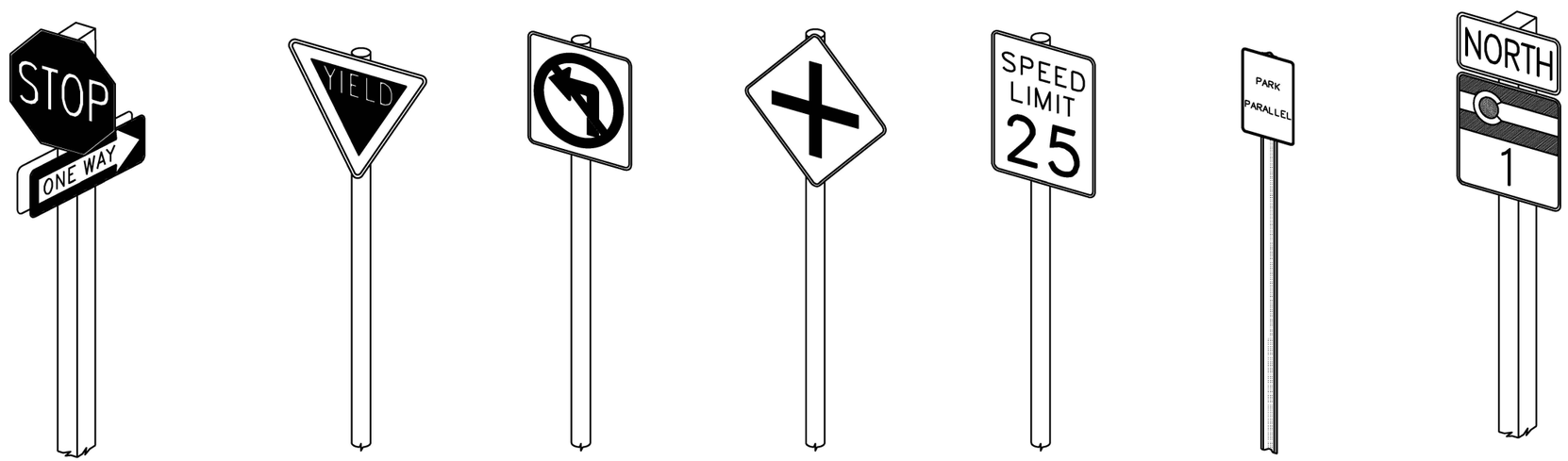

TYPICAL CLASS I GROUND SIGNS

Computer File Information		Sheet Revisions	
Creation Date: 07/04/12		Date:	Comments
Created By: KCM	R-1	03/01/24	Revised notes 2, 3, 4 and 9. Added a Typical P Post Section detail.
Last Modification Date: 03/01/24			
Last Modified By: YSaucedo			
CAD Ver.: MicroStation V8 Scale: Not to Scale Units: English			

Colorado Department of Transportation
2829 W. Howard Pl.
Denver, CO 80204
Phone: 303-757-9654
FAX: 303-757-9219
Traffic & Safety Engineering EB

CLASS I SIGNS

Issued By: Traffic & Safety Engineering Branch July 31, 2019

STANDARD PLAN NO.
S-614-2
Standard Sheet No. 1 of 1
Project Sheet Number:

HORIZONTAL SECTIONS

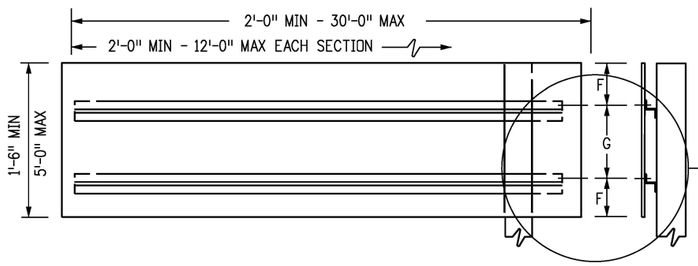

SECTIONS REQUIRED

WIDTH	*SECTIONS
2'-0" TO 12'-0"	1
12'-6" TO 24'-0"	2
24'-6" TO 30'-0"	3

*NUMBER OF SECTIONS SHALL NOT EXCEED MAXIMUM SHOWN IN TABLE

SEE TYPICAL DETAIL ON SHEET 2

VERTICAL SECTIONS

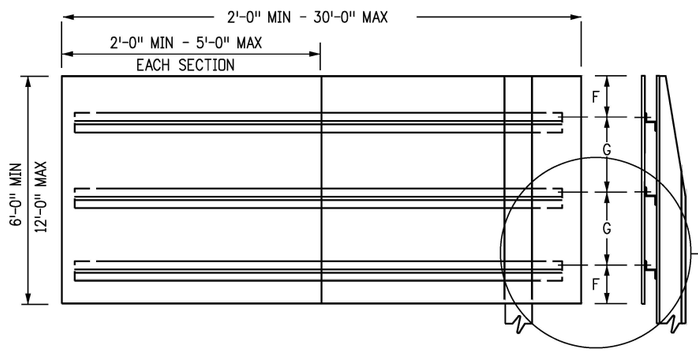

SECTIONS REQUIRED

WIDTH	*SECTIONS
2'-0" TO 5'-0"	1
5'-6" TO 10'-0"	2-3
10'-6" TO 15'-0"	3-4
15'-6" TO 20'-0"	4-5
20'-6" TO 25'-0"	5-7
25'-6" TO 30'-0"	6-8

*NUMBER OF SECTIONS SHALL NOT EXCEED MAXIMUM SHOWN IN TABLE

SEE TYPICAL DETAIL ON SHEET 2

MULTI-VERTICAL SECTIONS

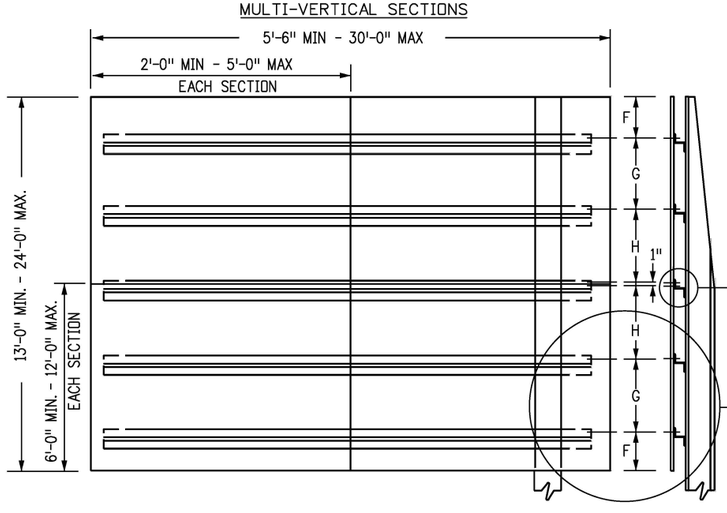

SECTIONS REQUIRED

WIDTH	*SECTIONS
5'-6" TO 10'-0"	4-6
10'-6" TO 15'-0"	6-8
15'-6" TO 20'-0"	8-10
20'-6" TO 25'-0"	10-14
25'-6" TO 30'-0"	12-16

*NUMBER OF SECTIONS SHALL NOT EXCEED MAXIMUM SHOWN IN TABLE

SEE TYPICAL SEAM CLOSURE DETAIL ON SHEET 2

SEE TYPICAL DETAIL ON SHEET 2

TYPICAL PANEL ELEVATIONS

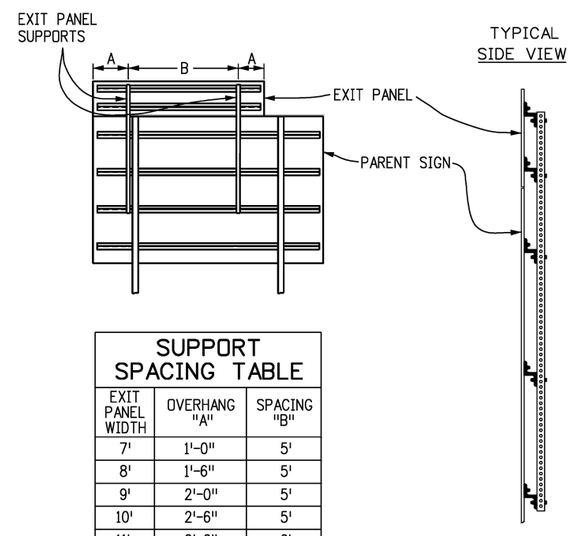

SUPPORT SPACING TABLE

EXIT PANEL WIDTH	OVERHANG "A"	SPACING "B"
7'	1'-0"	5'
8'	1'-6"	5'
9'	2'-0"	5'
10'	2'-6"	5'
11'	2'-6"	6'
12'	2'-6"	7'

TYPICAL EXIT PANEL INSTALLATION FOR GROUND SIGNS

GENERAL NOTES

1. TIMBER SIGN POSTS MAY ONLY BE USED FOR TEMPORARY SIGNAGE DURING CONSTRUCTION. TUBULAR STEEL SHALL BE USED FOR PERMANENT INSTALLATION
2. CLASS III SIGN PANELS ARE THOSE WHERE A SINGLE PANEL REQUIRES 3 OR MORE BACKING ZEES AND ARE 72 INCH OR MORE IN HEIGHT. GROUND MOUNT AND OVERHEAD EXIT SIGN PANEL ASSEMBLIES SHALL BE CLASS III. CLASS III SIGN PANELS SHALL BE 0.125 INCH MINIMUM THICKNESS SHEET ALUMINUM.
3. SEE THE APPLICABLE STANDARDS FOR SIGN PLACEMENT, FOOTING DETAILS AND POST SPACING TABLES.
4. A $\frac{3}{4}$ IN 90° COUNTERSUNK HUCKBOLT AND COLLAR SHALL BE USED TO FASTEN THE SIGN PANEL TO THE BACKING ZEE. A HEX-HEAD BOLT WITH NUT AND WASHERS SHALL BE USED TO FASTEN THE BACKING ZEE TO A TIMBER POST OR TO A STEEL POST.
5. A FLAT WASHER SHALL BE PLACED BETWEEN THE BOLT HEAD AND THE POST FLANGE. A LOCK WASHER SHALL BE PLACED UNDER THE NUT ON A STEEL POST OR A BACKING ZEE. A $1\frac{1}{2}$ IN DIAMETER WASHER SHALL BE PLACED UNDER THE BOLT HEAD ON A TIMBER POST.
6. ALL EXPOSED SIGN PANEL SECTION JOINTS, EXCEPT THE MULTI-VERTICAL SECTIONS HORIZONTAL SEAM, SHALL BE COVERED ON THE BACKSIDE OF THE SIGN PANEL WITH AN ALUMINUM CLOSURE STRIP. CLOSURE STRIPS SHALL BE RIVETED OR TAPED. SEE FABRICATION NOTES.
7. SECTIONS ILLUSTRATED BASED ON UTILIZING 12-FEET X 5-FEET STOCK. 4-FEET WIDE STOCK MAY BE USED WITH APPROPRIATE ADJUSTMENT IN NUMBER OF SECTIONS.
8. ALL SIGNS SHALL BE FABRICATED USING RETROREFLECTIVE SHEETING CONFORMING TO ASTM D4956. THE TYPE SHALL BE AS DESCRIBED IN THE STANDARD SPECIFICATIONS AND/OR AS SHOWN ON THE PLANS.
9. FOR THE DESIGN OF POSTS AND FOOTINGS DESIGN, SEE 'CLASS III SIGN POST AND FOOTING CALCULATION' SPREADSHEET ON CDOT WEBSITE.

EXIT PANEL NOTES

1. THE EXIT PANEL SHALL BE MOUNTED WITH TWO SUPPORTS. RIGHT HAND EXITS REQUIRE THE EDGE OF THE EXIT PANEL TO BE MOUNTED EVEN WITH THE RIGHT EDGE OF THE PARENT SIGN. LEFT HAND EXITS REQUIRE THE LEFT EDGE OF THE EXIT PANEL TO BE MOUNTED EVEN WITH THE LEFT EDGE OF THE PARENT SIGN.
2. THE SUPPORTS SHALL BE SQUARE STEEL TUBING A MINIMUM WIDTH OF $2\frac{1}{4}$-INCH WITH $\frac{7}{16}$-INCH HOLES PUNCHED OR DRILLED ON 1 INCH CENTERS ALONG THE LENGTH OF EACH SIDE WHILE MAINTAINING A MINIMUM SECTION MODULUS OF 0.499 CUBIC INCHES. THE STEEL MUST HAVE A MINIMUM YIELD STRESS OF 33 KSI. ALTERNATELY, ZEE BAR MAY USED FOR THE SUPPORT MEMBERS WITH $\frac{7}{8}$ INCH HOLES PUNCHED WHERE NEEDED.
3. THE SUPPORTS SHALL BE FASTENED TO THE BACKING ZEE USING $\frac{3}{8}$-INCH BOLTS.
4. THE EXIT PANEL SUPPORT MAY BE MOVED 6-INCHES IF IT CONFLICTS WITH THE PARENT SIGN SUPPORT.
5. EXIT PANEL MOUNTING WILL BE PAID FOR AS PART OF THE CLASS III SIGN PANEL.
6. EXIT PANEL SUPPORTS SHALL BE ATTACHED TO A MINIMUM OF THREE BACKING ZEES.

Computer File Information		Sheet Revisions	
Creation Date: 07/04/12		Date:	Comments
Created By: KCM	R-1	03/01/24	Revised note 2.
Last Modification Date: 03/01/24			
Last Modified By: YSaucedo			
CAD Ver.: MicroStation V8 Scale: Not to Scale Units: English			

Colorado Department of Transportation
2829 W. Howard Pl.
Denver, CO 80204
Phone: 303-757-9654
FAX: 303-757-9219
Traffic & Safety Engineering EB

CLASS III SIGNS

Issued By: Traffic & Safety Engineering Branch July 31, 2019

STANDARD PLAN NO.
S-614-4
Standard Sheet No. 1 of 3
Project Sheet Number:

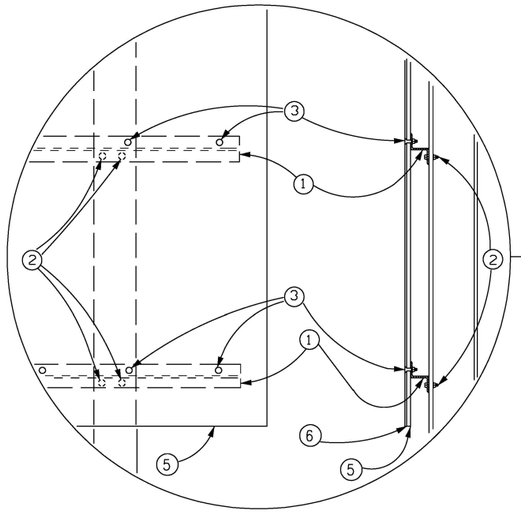

TYPICAL ELEVATION DETAIL

FABRICATION NOTES

1. BACKING ZEE. SEE "ZEE SPACING TABLE" ON SHEET 3. ALUMINUM ALLOY 6061-T6. EACH ZEE TO BE PROVIDED WITH A 9/16 IN X 2 IN HORIZONTAL SLOT FOR EACH POST MOUNTING BOLT.
2. 3/8-IN HEX-HEAD BOLT WITH NUT AND WASHERS; 2 PER BACKING ZEE PER POST REQUIRED. WASHERS ON POST SHALL BE 1 1/2-IN DIAMETER.
3. 3/8-IN (NO. 6) 90° COUNTERSUNK HUCKBOLT WITH COLLAR.
4. 2-IN X 0.025-IN ALUMINUM CLOSURE STRIP RIVETED ABOVE THE TOP Z AND BELOW THE BOTTOM Z OR ALUMINUM CLOSURE STRIPS ATTACHED ABOVE, BETWEEN, AND BELOW THE ZEES WITH A VERY HIGH BOND (VHB) DOUBLE ACRYLIC FOAM TAPE, OR APPROVED EQUIVALENT. MANUFACTURER'S RECOMMENDATIONS SHALL BE ADHERED TO FOR THIS APPLICATION.
5. SHEET ALUMINUM: 0.125-IN MINIMUM THICKNESS.
6. ADHESIVES SHALL BE CLASS I OR CLASS II ADHESIVES OF ASTM D4956.
7. BACKING ZEES SHALL EXTEND TO THE EDGE OF THE PANEL ON 6 FT, 7 FT & 8 FT WIDE SIGNS.

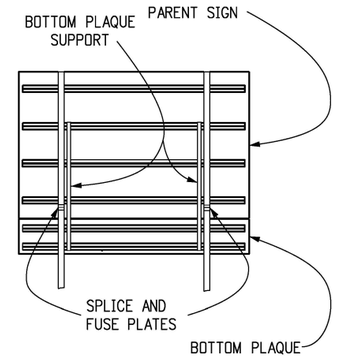

*TYPICAL BOTTOM PLAQUE INSTALLATION FOR GROUND SIGNS (FULL WIDTH PLAQUE SUPPORT)

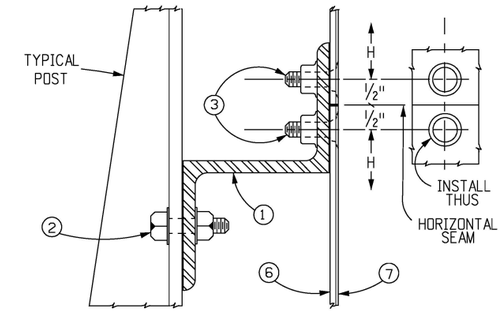

TYPICAL DETAIL SEAM CLOSURE ZEE

(MULTIPLE-VERTICAL SECTIONS, HORIZONTAL SEAMS)

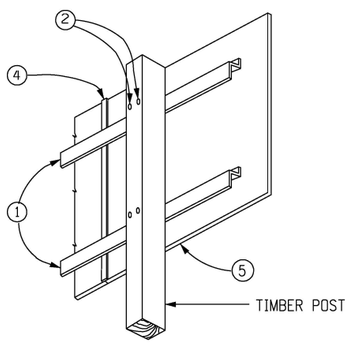

TYPICAL VIEW

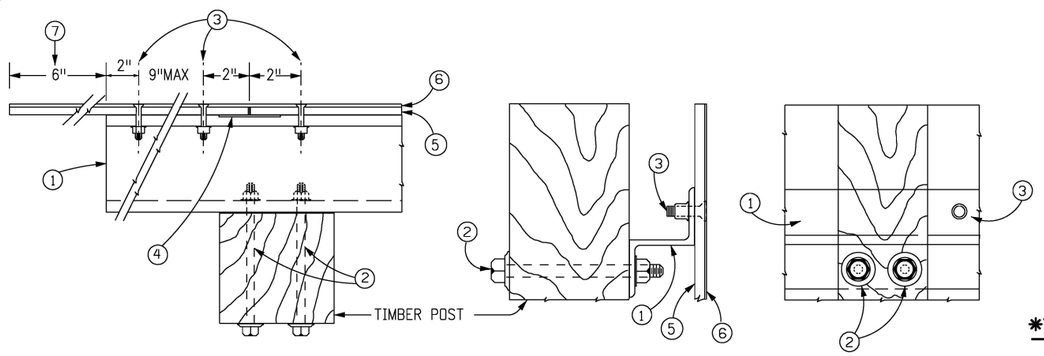

TYPICAL TIMBER POST INSTALLATION

PANEL FABRICATION AND MOUNTING DETAILS

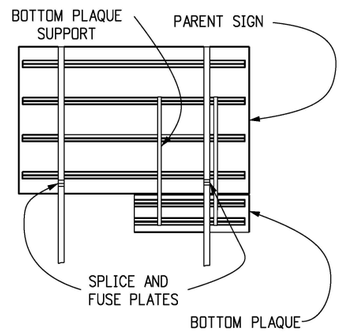

*TYPICAL BOTTOM PLAQUE INSTALLATION FOR GROUND SIGNS (PARTIAL WIDTH PLAQUE SUPPORT)

* IN NO CASE SHALL ANY PORTION OF A SIGN PANEL OR PLAQUE BE ATTACHED TO A BREAKAWAY POST BELOW THE FUSE AND SPLICE PLATES.

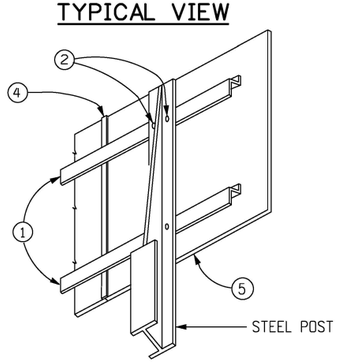

TYPICAL VIEW

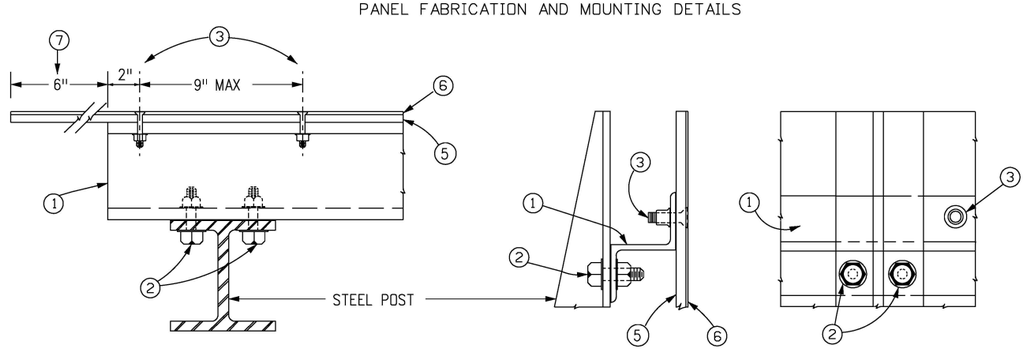

TYPICAL STEEL POST INSTALLATION

PANEL FABRICATION AND MOUNTING DETAILS

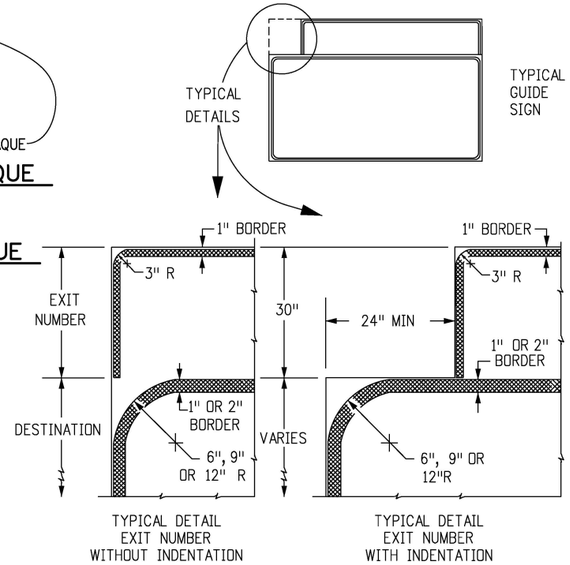

TYPICAL BORDER DETAILS WITH EXIT NUMBER

Computer File Information	Sheet Revisions		Colorado Department of Transportation	CLASS III SIGNS	STANDARD PLAN NO.
Creation Date: 07/04/12	Date:	Comments	2829 W. Howard Pl. Denver, CO 80204 Phone: 303-757-9436 FAX: 303-757-9219		S-614-4
Created By: SCL					Standard Sheet No. 2 of 3
Last Modification Date: 12/17/14					
Last Modified By: KEN			Traffic & Safety Engineering MKB	Issued By: Traffic & Safety Engineering Branch July 31, 2019	Project Sheet Number:
CAD Ver.: MicroStation V8 Scale: Not to Scale Units: English					

POST SP-CING T-BLE
FOR SHEET ALUMINUM SIGN PANELS

WIDTH OF SIGN	NO. OF POSTS	OVERH-NG "_"	POST SP-CING "B"
1'-6"	1	0'-9"	
2'-0"	1	1'-0"	
2'-6"	1	1'-3"	
3'-0"	1	1'-6"	
4'-0"	1	2'-0"	
5'-0"	1	2'-6"	
6'-0" (1), (2)	2	0'-3"	5'-6"
7'-0" (1), (2)	2	0'-3"	6'-6"
8'-0" (1)	2	0'-3"	7'-6"
9'-0"	2	0'-9"	7'-6"
10'-0"	2	1'-3"	7'-6"
11'-0"	2	1'-9"	7'-6"
12'-0"	2	2'-3"	7'-6"
13'-0"	2	2'-6"	8'-0"
14'-0"	2	2'-6"	9'-0"
15'-0"	2	3'-0"	9'-0"
16'-0"	2	3'-3"	9'-6"
17'-0"	2	3'-3"	10'-6"
18'-0"	2	3'-6"	11'-0"
19'-0"	2	3'-9"	11'-6"
20'-0"	2	4'-0"	12'-0"
21'-0"	3	2'-6"	8'-0"
22'-0"	3	3'-0"	8'-0"
23'-0"	3	3'-6"	8'-0"
24'-0"	3	3'-8"	8'-4"
25'-0"	3	4'-0"	8'-6"
26'-0"	3	4'-0"	9'-0"
27'-0"	3	4'-0"	9'-6"
28'-0"	3	4'-0"	10'-0"
29'-0"	3	4'-0"	10'-6"
30'-0"	3	4'-0"	11'-0"

(1) B-CKING ZEE SH-LL EXTEND TO THE EDGE OF THE P-NEL, EXCEPT FOR EXIT P-NELS -TT-CHED BY SQU-RE STEEL TUBING.

(2) 6" X 6" TIMBER POSTS WILL NOT BE USED FOR THESE SIZES OF P-NEL.

ZEE SP-CING T-BLE
FOR 3" X 2 11/16 X 2.33 ALUMINUM BACKING ZEES

SIGN P-NEL HEIGHT	NUMBER OF ZEES	OVERH-NG "F"	SP-CING "G"	SIGN P-NEL HEIGHT	NUMBER OF ZEES	OVERH-NG "F"	SP-CING "G"	SP-CING "H"
1'-6"	2	0'-4"	0'-10"	13'-0"	7	1'-0"	1'-10"	1'-9 1/2"
2'-0"	2	0'-5"	1'-2"	14'-0"	7	0'-6"	2'-2"	2'-1 1/2"
2'-6"	2	0'-6"	1'-6"	15'-0"	7	1'-0"	2'-2"	2'-1 1/2"
3'-0"	2	0'-7"	1'-10"	16'-0"	7	0'-6"	2'-6"	2'-5 1/2"
4'-0"	2	0'-11"	2'-2"	17'-0"	7	1'-0"	2'-6"	2'-5 1/2"
5'-0"	2	1'-3"	2'-6"	18'-0"	9	0'-4"	2'-2"	2'-1 1/2"
6'-0"	3	0'-10"	2'-2"	19'-0"	9	0'-10"	2'-2"	2'-1 1/2"
7'-0"	3	1'-0"	2'-6"	20'-0"	9	1'-4"	2'-2"	2'-1 1/2"
8'-0"	4	0'-9"	2'-2"	21'-0"	9	0'-6"	2'-6"	2'-5 1/2"
9'-0"	4	1'-3"	2'-2"	22'-0"	9	1'-0"	2'-6"	2'-5 1/2"
10'-0"	4	1'-3"	2'-6"	23'-0"	11	0'-8"	2'-2"	2'-1 1/2"
11'-0"	5	1'-2"	2'-2"	24'-0"	11	1'-2"	2'-2"	2'-1 1/2"
12'-0"	5	1'-0"	2'-6"					

NOTES: FOR F, G & H. SEE DET-ILS ON SHEET 1.

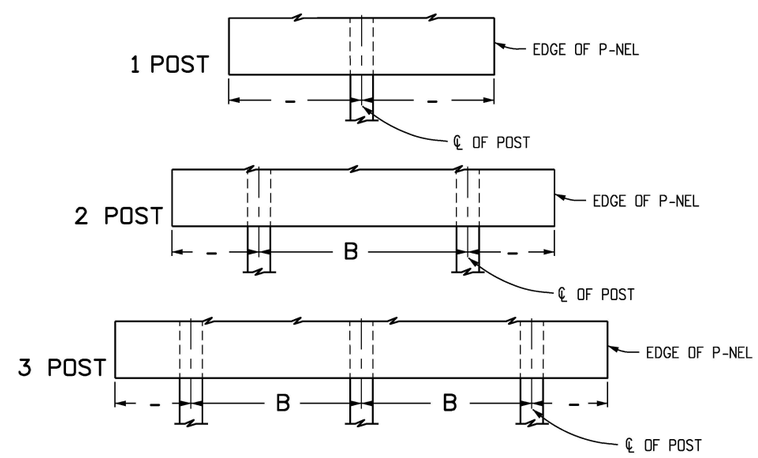

TYPIC-L POST SP-CING

Computer File Information	Sheet Revisions	
Creation Date: 07/04/12	Date:	Comments
Created By: SCL		
Last Modification Date:		
Last Modified By:		
C-D Ver.: MicroStation V8 Scale: Not to Scale Units: English		

Colorado Department of Transportation
2829 W. Howard Pl.
Denver, CO 80204
Phone: 303-757-9436
FAX: 303-757-9219
Traffic & Safety Engineering MKB

CLASS III SIGNS

Issued By: Traffic & Safety Engineering Branch July 31, 2019

STANDARD PLAN NO.
S-614-4
Standard Sheet No. 3 of 3
Project Sheet Number:

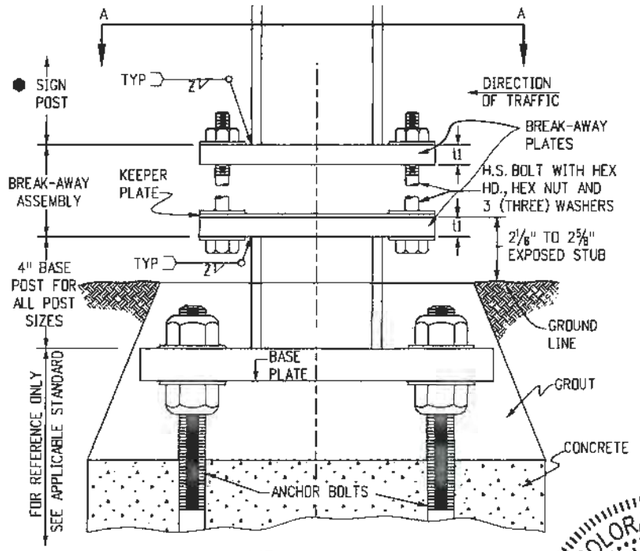

TYPICAL ELEVATION
STEEL POST ASSEMBLY

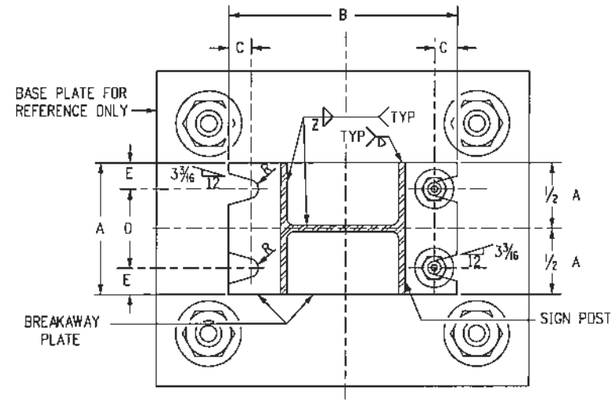

SECTION A-A

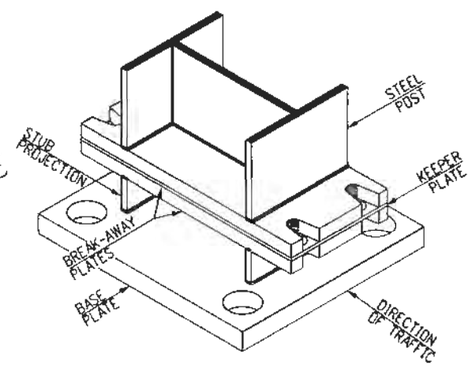

TYPICAL PROJECTED VIEW
STEEL POST ASSEMBLY

COLORADO LICENSED
MANJARI BHATT
43178
08/01/19
PROFESSIONAL ENGINEER

GENERAL NOTES

1. DESIGN CONFORMS WITH AASHTO "SPECIFICATIONS FOR THE DESIGN AND CONSTRUCTION OF STRUCTURAL SUPPORTS FOR HIGHWAY SIGNS".
2. ALL STRUCTURAL STEEL SHALL CONFORM TO AASHTO M270 (ASTM A709) GRADE 36 AND SECTIONS 509 AND 614 OF THE STANDARD SPECIFICATIONS.
3. STEEL FUSE PLATES AND SPLICE PLATES SHALL CONFORM TO AASHTO M270 (ASTM A709) GRADE 36.
4. ALL STRUCTURAL STEEL INCLUDING FUSE AND SPLICE PLATES SHALL BE GALVANIZED IN ACCORDANCE WITH ASTM A123 AFTER FABRICATION. STEEL POSTS SHALL BE STAMPED WITH THEIR SIZE.
5. ALL HIGH STRENGTH BOLTS, NUTS AND WASHERS SHALL CONFORM TO ASTM-A325. WASHERS USED IN THE BREAK-AWAY PLATE AND FUSE PLATE ASSEMBLIES SHALL BE OF SUFFICIENT STRENGTH TO PREVENT ANY DEFLECTION OR CUPPING INTO THE SLOTTED GROOVES UNDER BOLT TORQUING.
6. ALL BOLTS, NUTS, AND WASHERS SHALL BE GALVANIZED AS PER ASTM-A153 OR ASTM-A164.
7. ALL HOLES IN FUSE PLATE AND POST FLANGE ON WHICH IT MOUNTS, SHALL BE DRILLED. ALL OTHERS MAY BE DRILLED OR SUB-PUNCHED AND REAMED.
8. ALL STEEL CUTS SHALL PREFERABLY BE SAW CUTS; HOWEVER, FLAME CUTTING WILL BE PERMITTED PROVIDED ALL EDGES ARE GROUND. REMOVE ALL BURRS. METAL SHALL NOT PROJECT BEYOND THE PLANE OF THE PLATE FACE.
9. A "KEEPER PLATE" OF 28-GAGE GALVANIZED SHEET METAL, FABRICATED TO MATCH BREAKAWAY PLATE DIMENSIONS BUT WITH HOLES RATHER THAN SLOTS, SHALL BE USED TO PREVENT BOLT LOOSENING DUE TO WIND VIBRATION.
10. HIGH STRENGTH BOLTS IN THE BREAKAWAY ASSEMBLY SHALL BE TIGHTENED ONLY TO THE TORQUE SHOWN IN THE TABLE. DO NOT OVERTIGHTEN.
11. TIMBER POSTS SHALL BE IN ACCORDANCE WITH SECTION 614 OF THE STANDARD SPECIFICATIONS AS TO SIZE, ALTERNATE SIZE, GRADE, SPECIES, TREAMENT, AND BREAKAWAY.
12. FOR ALL BASE PLATE AND FOOTING WORK SEE STANDARD PLAN S-614-6.
13. FOR ADDITIONAL INFORMATION, REFER TO "TABULATION OF SIGN AND CROSS SECTIONS FOR CLASS III SIGNS" INCLUDED IN THE PLANS.
14. ▼ TIMBER POST SHALL BE FLUSH WITH TOP OF SIGN PANEL FOR DIRECT MOUNT AND 3-3/16" MINIMUM ABOVE BOLT FOR BACKING ZEE MOUNT.
15. TIMBER SIGN POST MAY ONLY BE USED FOR TEMPORARY SIGNAGE DURING CONSTRUCTION. TUBULAR STEEL SHALL BE USED FOR PERMANENT INSTALLATIONS.
16. IN NO CASE SHALL A BACKING ZEE BE PLACED BELOW THE FUSE PLATES.
17. SIGN POST PAY LENGTH IS FROM THE UPPER BREAKAWAY PLATE TO THE TOP OF THE "COPE". THE 4-INCH "BASE POST" AND THE LOWER "BREAKAWAY PLATE" ARE PAID FOR AS PART OF THE FOOTING. THE UPPER "BREAKAWAY PLATE" AND ALL NUTS, BOLTS, WASHERS AND KEEPER PLATE FOR FASTENING THE BREAKAWAY PLATES ARE PAID FOR AS A PART OF THE POST.

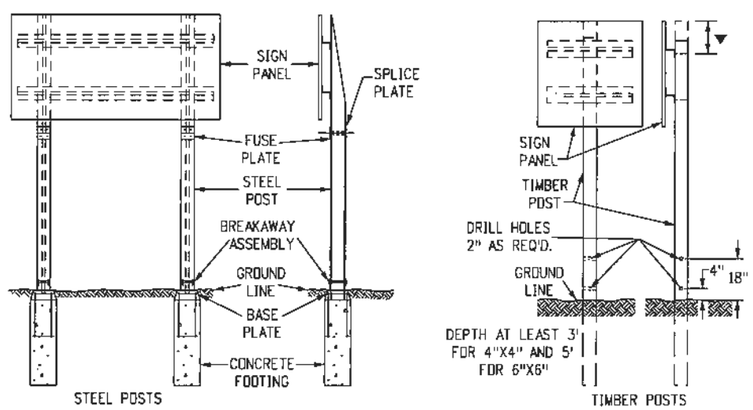

TYPICAL BREAKAWAY SIGN SUPPORT INSTALLATIONS

BOLTING PROCEDURE FOR BREAKAWAY PLATE ASSEMBLY

1. ASSEMBLE THE POST TO THE STUB WITH BOLTS, WITH ONE FLAT WASHER ON THE TOP OF THE UPPER BREAKAWAY PLATE AND ONE BELOW THE LOWER BREAKAWAY PLATE, AND ONE FLAT WASHER AND A KEEPER PLATE BETWEEN THE BREAKAWAY PLATES.
2. TIGHTEN ALL BOLTS TO A "SNUG TIGHT" CONDITION WITH A 12 IN. TO 15 IN. WRENCH, TO BED THE WASHERS AND CLEAN THE BOLT THREADS. THEN LOOSEN EACH BOLT IN TURN, AND RETIGHTEN IN A SYSTEMATIC ORDER TO THE PRESCRIBED TORQUE (SEE BREAKAWAY PLATE DATA TABLES).
3. BURR THREADS AT JUNCTION WITH NUT TO PREVENT NUT LOOSENING.

BREAKAWAY PLATE DATA TABLE

DIMENSION / POST SIZE	BOLT SIZE AND TORQUE	A	B	C	D	E	t1	WELD Z	R
W 12 X 26	3/4"ø X 3 3/4" 46 Ft. Lb.	6 1/2"	17"	7/8"	3 1/2"	1 1/2"	1"	5/16"	13/32"
W 10 X 26		5 3/4"	14 7/8"	7/8"	3 1/4"	1 1/4"	1"	5/16"	13/32"
W 10 X 22		5 3/4"	14 5/8"	7/8"	3 1/4"	1 1/4"	1"	5/16"	13/32"
W 8 X 21		5 1/4"	12 5/8"	7/8"	2 3/4"	1 1/4"	1"	5/16"	13/32"
W 8 X 18	5/8"ø X 3" 29 Ft. Lb.	5 1/4"	12"	3/4"	3"	1 1/8"	3/4"	1/4"	11/32"
W 6 X 15		6"	10"	3/4"	3 3/4"	1 1/8"	3/4"	1/4"	11/32"
W 6 X 12		5"	10"	3/4"	2 3/4"	1 1/8"	3/4"	1/4"	11/32"

Computer File Information	Sheet Revisions	
Creation Date: 07/04/12	Date:	Comments
Created By: SCL		
Last Modification Date:		
Last Modified By:		
CAD Ver.: MicroStation V8 Scale: Not to Scale Units: English		

Colorado Department of Transportation
2829 W. Howard Pl.
Denver, CO 80204
Phone: 303-757-9436
FAX: 303-757-9219
Traffic & Safety Engineering MKB

BREAKAWAY SIGN SUPPORT DETAILS FOR CLASS III SIGNS

Issued By: Traffic & Safety Engineering Branch July 31, 2019

STANDARD PLAN NO.
S-614-5
Standard Sheet No. 1 of 2
Project Sheet Number:

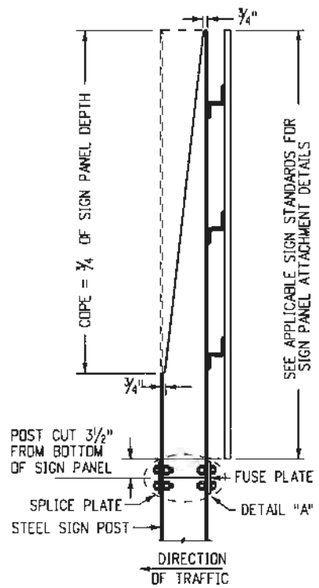

TYPICAL SIDE VIEW
FUSE PLATE AND POST COPE

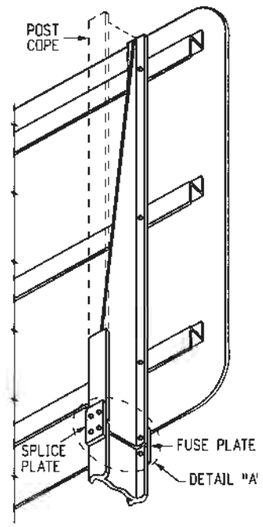

TYPICAL PROJECTED VIEW
FUSE PLATE AND POST COPE

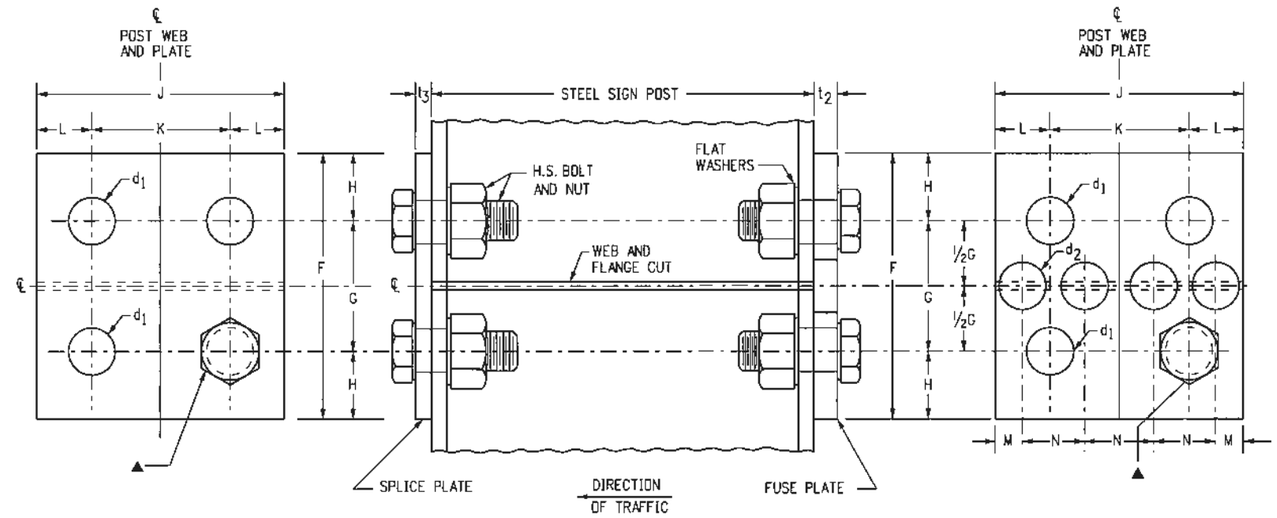

SPLICE PLATE DETAIL

DETAIL "A" - SIDE VIEW

FUSE PLATE DETAIL

▲ HOLE DIAMETER= d1
USE HIGH STRENGTH BOLTS WITH HEX HEAD AND HEX NUT, WITH ONE FLAT WASHER UNDER EACH

TYPICAL FUSE AND SPLICE PLATE HINGE DETAILS

FUSE AND SPLICE PLATE HINGE DATA TABLE

SIZE / POST	F	G	H	J	K	L	M	N	d_1	d_2	t_2	t_3	BOLT SIZE	FABRICATION NOTES
W 12 X 26	6"	3"	1½"	6½"	3½"	1½"	13/16"	1⅝"	13/16"	1 5/16"	½"	7/16"	¾" ØX 2½"	ALL HOLES IN FUSE PLATE AND POST FLANGE HOLES ON WHICH IT MOUNTS SHALL BE DRILLED. ALL OTHERS MAY BE PUNCHED. BURR THREADS AT JUNCTION WITH NUT TO PREVENT NUT LOOSENING. ASTM-A441, ASTM-572 GRADE 50, OR ASTM-A588 MAY BE SUBSTITUTED FOR AASHTO M270 (ASTM A709) GRADE 36 AT THE OPTION OF THE FABRICATOR. STEEL USED SHALL HAVE AN ULTIMATE TENSILE STRENGTH NOT TO EXCEED 80 KSI.
W 10 X 26	6"	3"	1½"	5¾"	2¾"	1½"	13/16"	1⅝"	13/16"	1⅛"	½"	7/16"	¾" ØX 2½"	
W 10 X 22	6"	3"	1½"	5¾"	2¾"	1½"	13/16"	1⅝"	13/16"	1⅛"	½"	⅜"	¾" ØX 2½"	
W 8 X 21	5½"	2½"	1½"	5¼"	2¾"	1¼"	¾"	1¼"	13/16"	1"	½"	⅜"	¾" ØX 2½"	
W 8 X 18	5"	2½"	1¼"	5¼"	2¾"	1¼"	¾"	1¼"	11/16"	1 1/16"	⅜"	⅜"	⅝" ØX 2½"	
W 6 X 15	5"	2½"	1¼"	6"	3½"	1¼"	¾"	1½"	11/16"	1¼"	⅜"	¼"	⅝" ØX 2½"	
W 6 X 12	4¼"	2"	1⅛"	4"	2¼"	⅞"	½"	1"	5/16"	¾"	¼"	¼"	½" ØX 1¾"	

Computer File Information		Sheet Revisions	
Creation Date: 07/04/12		Date:	Comments
Created By: SCL			
Last Modification Date:			
Last Modified By:			
CAD Ver.: MicroStation V8 Scale: Not to Scale Units: English			

Colorado Department of Transportation
2829 W. Howard Pl.
Denver, CO 80204
Phone: 303-757-9436
FAX: 303-757-9219
Traffic & Safety Engineering MKB

BREAK-AWAY SIGN SUPPORT DETAILS FOR CLASS III SIGNS

Issued By: Traffic & Safety Engineering Branch July 31, 2019

STANDARD PLAN NO.
S-614-5
Standard Sheet No. 2 of 2
Project Sheet Number:

TUBULAR STEEL POSTS
(SOCKET SYSTEM) (FOR USE WITH ALL P-POST INSTALLATIONS)
(SEE SHEET 2 FOR P1 AND P2 POST INSTALLATIONS)

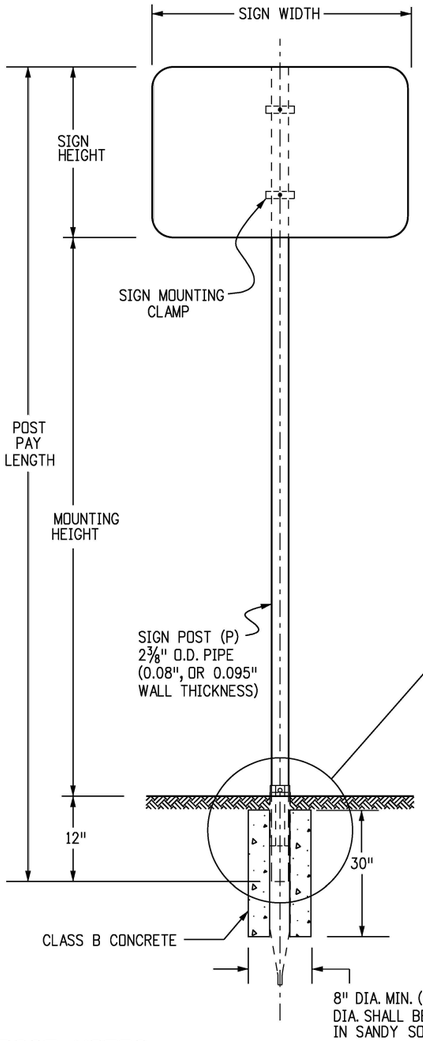

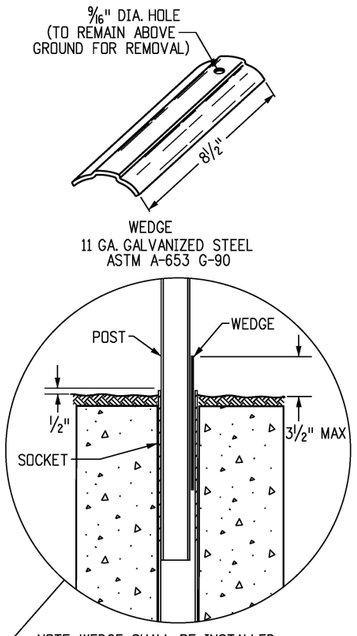

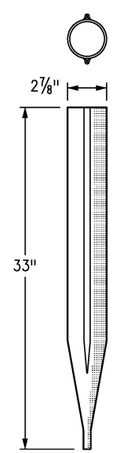

TUBULAR CONCRETE FOOTING
12 GA. GALVANIZED
STEEL ASTM - 787

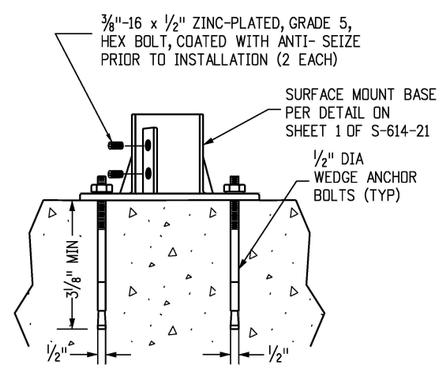

SIDE VIEW

SURFACE MOUNT DETAIL (P POST ONLY)

THE POST MAY BE SURFACE MOUNTED WHEN APPROVED BY THE ENGINEER

POST NOTES

THE POST MAY BE PRE-PUNCHED WITH ⅜" DIA. HOLES AND THE SIGN MOUNTED DIRECTLY TO THE POST, OR AN APPROVED MOUNTING CLAMP MAY BE USED TO MOUNT THE SIGN TO THE POST. IF THE POST IS PRE-PUNCHED, THE HOLES SHALL BE SPACED THE FOLLOWING DISTANCES FROM THE TOP:

1", 3", 10", 16", 21", 23", 24", 27", 33", 37", 39", AND 45"

SIGNPOST SELECTION GUIDE (90 MPH WIND LOAD DESIGN)
(FOR SOCKET SYSTEM AND SLIPBASE INSTALLATIONS USING P, P1 OR P2 POSTS)

7' MOUNTING HEIGHT

SIGN HEIGHT (FT) \ SIGN WIDTH (FT)	1	2	2.5	3	4	5	6	7	8	9	10	11	12+
1	P	P	P	P	P	P1	SIZES NOT USED						
2	P	P	P	P	P	P1	TWO P1'S				TWO P2'S		
2.5	P	P	P	P	P1	P1							
3	P	P	P	P1	P1	P1							
4	P	P1	P1	P1	P1	P1							
5	SIZES NOT USED		P1	P1	P1	P1							
6			P1	P1	P1	▼P2			TWO P2'S		THREE P2'S		
7			P1	P1	▼P2				TWO P2'S			SEE CHART NOTE 5.	

▼ SEE CHART NOTE 4.

8' MOUNTING HEIGHT

SIGN HEIGHT (FT) \ SIGN WIDTH (FT)	1	2	2.5	3	4	5	6	7	8	9
1	P	P	P	P	P	P1	SIZES NOT USED			
2	P	P	P	P	P1	P1	TWO P1'S			
2.5	P	P	P	P1	P1	P1				
3	P	P	P1	P1	P1	P1				
4	P	P1	P1	P1	P1	P1				
5	SIZES NOT USED		P1	P1	P1	▼P2				
6			P1	P1	P1	▼P2				TWO P2'S
7			P1	P1	TWO P1'S	TWO P1'S		TWO P2'S	SIZES NOT USED	

9' MOUNTING HEIGHT

SIGN HEIGHT (FT) \ SIGN WIDTH (FT)	1	2	2.5	3	4	5	6	7	8	9
1	P	P	P	P	P	P1	SIZES NOT USED			
2	P	P	P	P	P1	P1	TWO P1'S			
2.5	P	P	P	P1	P1	P1				
3	P	P	P1	P1	P1	P1				
4	P	P1	P1	P1	P1	P1				
5	SIZES NOT USED		P1	P1	P1	▼P2				TWO P2'S
6			P1	P1	▼P2	TWO P1'S			TWO P2'S	
7			P1	P2	TWO P1'S	TWO P1'S		TWO P2'S	SIZES NOT USED	

CHART NOTES

1. TYPICAL POST MOUNTING HEIGHTS FROM GROUND TO BOTTOM OF SIGN PANEL ARE 7, 8 OR 9 FEET. OTHER HEIGHTS MAY BE REQUIRED WHEN SIGNS ARE MOUNTED ON STEEPER FILL OR CUT SLOPES.
2. FOR SIGNS MOUNTED ON TWO POSTS, THE MINIMUM DISTANCE BETWEEN POSTS SHALL BE 2 FEET AND THE MAXIMUM DISTANCE SHALL BE 8 FEET. DISTANCE FROM POST TO EDGE OF SIGN PANEL(S) SHALL BE 0 TO 4 INCHES. WHEN BACKING ZEES ARE USED, POSTS SHALL BE INSTALLED WITH A MINIMUM OF 2 INCHES TO THE EDGE OF THE BACKING ZEE.
3. ALL SIGN PANELS GREATER THAN 60 INCHES IN WIDTH MUST BE MOUNTED ON TWO POSTS TO PREVENT TURNING.
4. THE POST SIZES SHOWN ARE THE MINIMUM SIZES REQUIRED. TWO P1 POSTS MAY BE SUBSTITUTED WHERE ONE P2 POST IS INDICATED. P2 POSTS MAY SUBSTITUTED FOR P1 POSTS WHEN DIRECTED BY THE ENGINEER. W-SHAPE BEAM MAY BE SUBSTITUTED FOR P2 POSTS WHEN DIRECTED BY THE ENGINEER.
5. USE W-SHAPE BEAMS ONLY FOR SIGN POSTS.

GENERAL NOTES

1. SIGN PANELS LESS THAN 60 INCHES IN WIDTH MAY BE ATTACHED DIRECTLY TO T BRACKETS WITHOUT ZEES AND SIGN PANELS LESS THAN 48 INCHES IN WIDTH MAY BE ATTACHED DIRECTLY TO U BRACKETS WITHOUT ZEES. WIDTH OF A DIAMOND CONFIGURED SIGN PANEL IS MEASURED ACROSS OPPOSITE CORNERS.
2. U-BRACKETS MAY BE USED FOR MULTIPLE SIGN INSTALLATIONS.
3. FOR BACKING ZEE REQUIREMENTS AND DETAILS, SEE STANDARD PLANS S-614-3 AND S-614-4.
4. THE CONTRACTOR SHALL INSTALL THE POSTS PER THE MANUFACTURER'S RECOMMENDATIONS WITHOUT ADDITIONAL COMPENSATION.

POST SPECIFICATIONS

POST SIZE	OUTSIDE DIAMETER	WALL THICKNESS	MATERIAL	**COATING	MAX ALLOW MOMENT	PAID FOR AS:
P	2.375"	.080"	ASTM-513	ASTM A-653 G-210 WITH 3.0 MIL POLYMER COATING PER ASTM A123 CLEAR COATING	1.47 KIP FT	STEEL SIGN SUPPORT (2 INCH ROUND)
P1	2.875"	.160"	ASTM-513		4.02 KIP FT	STEEL SIGN SUPPORT (2½ INCH ROUND NP-40)
P2	2.875"	.276"	ASTM-500	GC HOT DIPPED PER ASTM-123	5.13 KIP FT	STEEL SIGN SUPPORT (2½ INCH ROUND SCH 80)

** COLOR POWDER COATING MAY BE ADDED ACCORDING TO MANUFACTURER SPECIFICATIONS FOR SPECIAL LOCATIONS WHEN SHOWN ON THE PLANS.

Computer File Information
Creation Date: 07/04/12
Created By: KEN
Last Modification Date: 03/01/24
Last Modified By: YSaucedo
CAD Ver.: MicroStation V8 Scale: Not to Scale Units: English

	Sheet Revisions	
	Date:	Comments
R-1	03/01/24	Update general note 1, updated ASTM reference for galvanized steel, added surface mount detail and updated charts.

Colorado Department of Transportation
2829 W. Howard Pl.
Denver, CO 80204
Phone: 303-757-9654
FAX: 303-757-9219
Traffic & Safety Engineering EB

TUBULAR STEEL SIGN SUPPORT DETAILS

Issued By: Traffic & Safety Engineering Branch July 31, 2019

STANDARD PLAN NO.
S-614-8
Standard Sheet No. 1 of 7
Project Sheet Number:

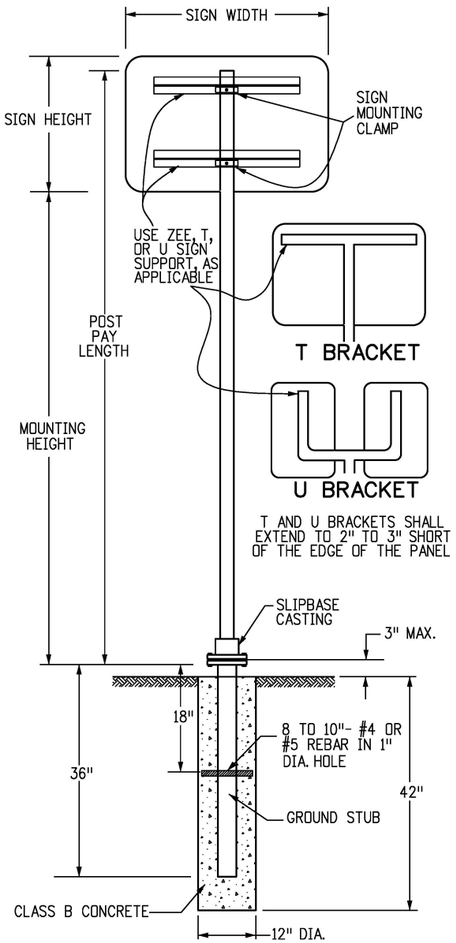

TUBULAR STEEL POST
(WITH SLIPBASE)
(FOR USE WITH ALL P1 AND
P2 POST INSTALLATIONS)
(SEE SHEET 1 FOR P-POST INSTALLATIONS)

DIMENSIONS FOR MOUNTING CLAMP (ALL DIMENSION ARE IN INCHES)

STANDARD PIPE SIZE	A	B	C	D	E	F	G	K	L	R_1	R_2
2	3 3/4	2 3/4	1 1/2	1 1/8	1/2	3/16	1	2 11/16	1 7/32	1 1/4	1 3/16
2 1/2	4 1/4	3 1/4	2	1 1/4	1/2	1/4	1	3 3/16	1 15/32	1 1/2	1 7/16

T AND U BRACKET ATTACHMENT

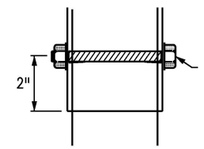

1/2" x 4 1/2" INCH LONG ZINC-PLATED OR GALVANIZED, GRADE 5 HEX BOLT. 2 FLAT AND 1 LOCK WASHER REQUIRED.

REPLACE FLAT WASHERS WITH 1 1/2" FENDER WASHER IN HIGH WIND/SNOW AREAS OR AS DIRECTED BY THE ENGINEER.

PIPE CLAMP CASTING

PIPE CLAMP CASTING SHALL BE ASTM B26 OR B108 ALUMINUM ALLOY A444.0-T4 OR 356.0-F. ALL SIGN MOUNTING CLAMP PARTS NOT MADE FROM ALUMINUM SHALL BE GALVANIZED STEEL IN CONFORMANCE WITH ASTM A153 OR STAINLESS STEEL.

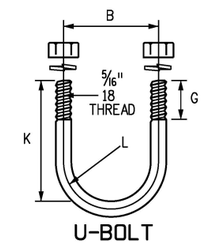

U-BOLT TO BE MADE IN ACCORDANCE WITH STANDARD MANUFACTURING PROCEDURE. 1/4" OR 5/18" DIAMETER STOCK IS PERMISSIBLE. AMERICAN STANDARD REGULAR SEMI-FINISHED HEX NUTS AND SPRING LOCKWASHERS.

TYPICAL SINGLE BRACKET

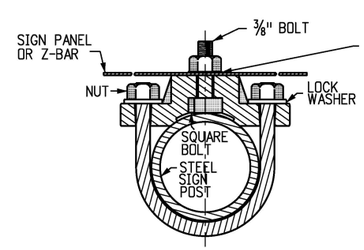

FLAT WASHER. REPLACE FLAT WASHER WITH 1 1/2" FENDER WASHER IN HIGH WIND/SNOW AREAS OR AS DIRECTED BY THE ENGINEER.

TYPICAL BACK TO BACK

2 FLAT WASHERS AND 2 LOCK WASHERS. REPLACE FLAT WASHERS WITH 1 1/2" FENDER WASHERS IN HIGH WIND/SNOW AREAS OR AS DIRECTED BY THE ENGINEER.

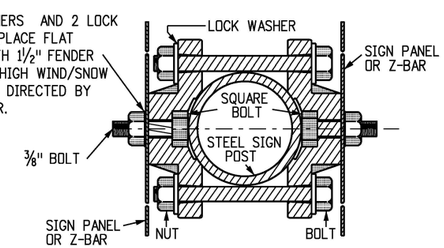

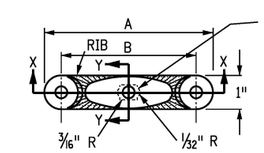

SLOT TO HOLD HEAD OF 3/8" HEX HEAD BOLT. THE BOLT SHALL BE 1 1/4" LONG, WITH FULL THREADS, A MEDIUM WASHER, AND GALVANIZED STEEL OR ALUMINUM SELF-LOCKING HEX HEAD NUT. THE BOLT HEAD MUST NOT TURN IN THE SLOT.

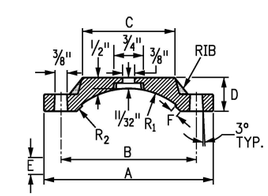

SECTION X-X

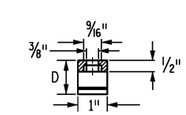

SECTION Y-Y

DETAILS FOR SIGN PANEL ATTACHMENT

MOUNTING CLAMP FOR SOCKET OR SLIPBASE

Computer File Information		Sheet Revisions	
Creation Date: 07/04/12		Date:	Comments
Created By: SCL	R-1	12/29/20	BOLT LENGTH IN 'T AND U BRACKET ATTACHMENT' WASHER REQUIREMENTS IN SIGN PANEL ATTACHMENT
Last Modification Date: 12/29/20			
Last Modified By:DiNardo			
CAD Ver.: MicroStation V8 Scale: Not to Scale Units: English			

Colorado Department of Transportation
2829 W. Howard Pl.
Denver, CO 80204
Phone: 303-757-9436
FAX: 303-757-9219
Traffic & Safety Engineering MKB

TUBULAR STEEL SIGN SUPPORT DETAILS

Issued By: Traffic & Safety Engineering Branch July 31, 2019

STANDARD PLAN NO.
S-614-8
Standard Sheet No. 2 of 7
Project Sheet Number:

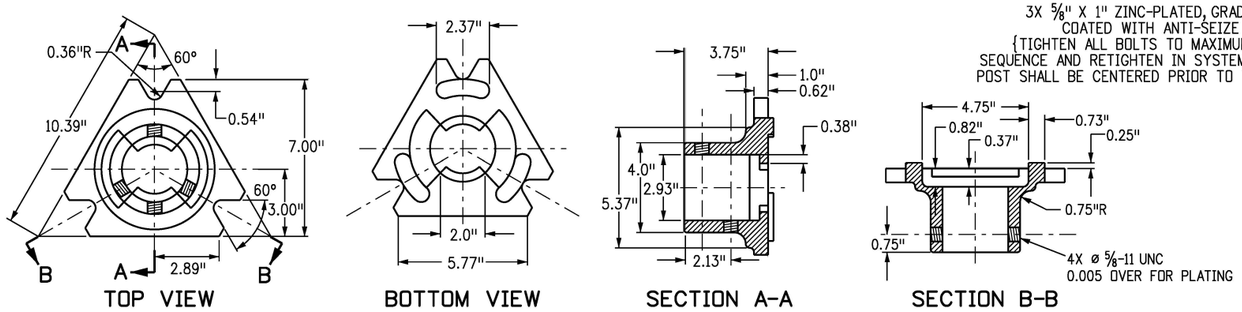

SLIPBASE CASTING 1

DIRECTION OF TRAVEL

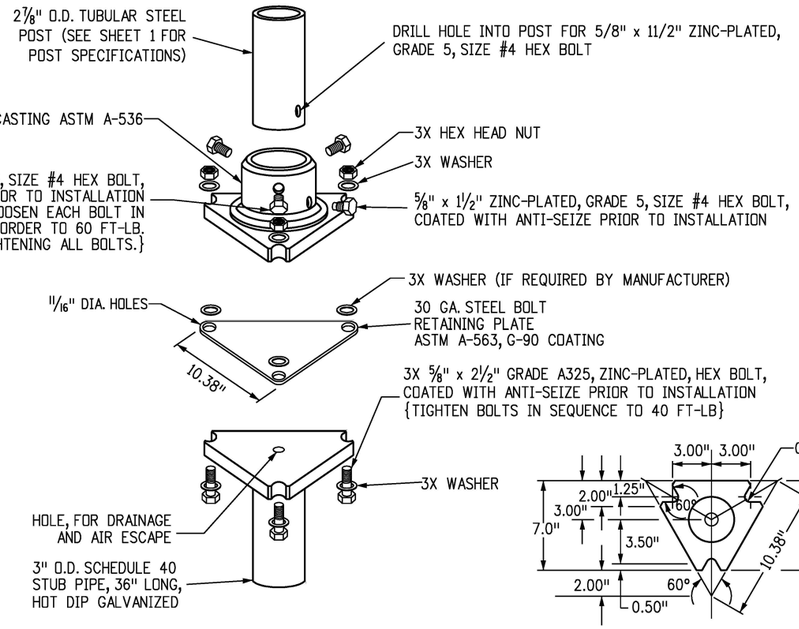

TYPICAL ASSEMBLY

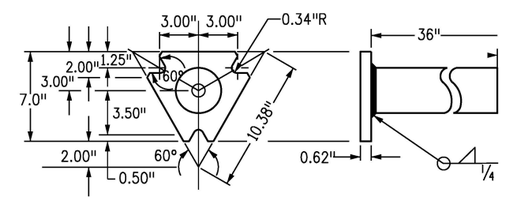

SLIPBASE STUB BASE

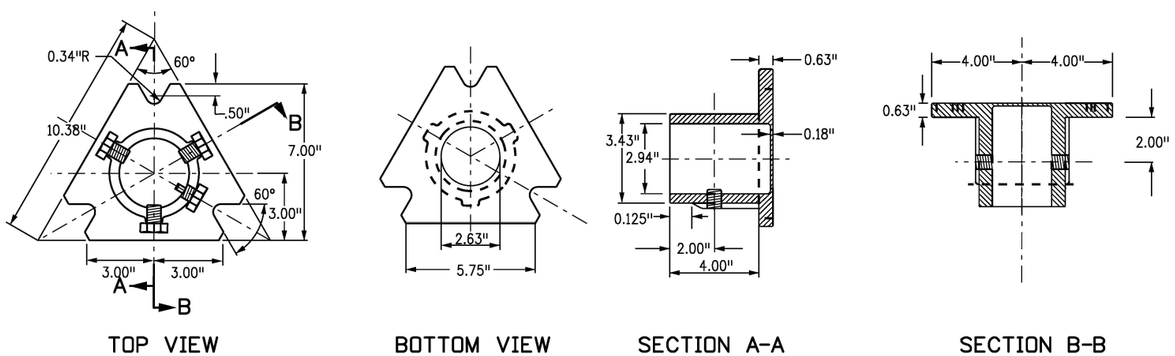

SLIPBASE CASTING 2

DIRECTION OF TRAVEL

SLIPBASE CASTING REQUIREMENTS

FOR 2-7/8 INCH POSTS (P1 OR P2 POSTS)
GALVANIZED STEEL SLIPBASE CASTING ASTM-536

MOUNTING HARDWARE

- 3 - EACH 5/8 x 2 1/2 INCH LONG HEX BOLT
- 3 - EACH 5/8 x 1 INCH LONG ZINC-PLATED, GRADE 5 SIZE #4 HEX BOLT
- 1 - EACH 5/8 x 1 1/2 INCH LONG ZINC-PLATED, GRADE 5 SIZE #4 HEX BOLT
- 1 - EACH 30 GAUGE STEEL BOLT RETAINING PLATE ASTM A-563, G-90 COATING

ALL HARDWARE WILL BE GALVANIZED OR ZINC PLATED.

INSTALLATION REQUIREMENTS

ALL HEX BOLTS SHALL BE COATED WITH ANTI-SEIZE PRIOR TO INSTALLATION

TUBULAR STEEL SIGN SUPPORT SLIPBASE NOTES

1. REFER TO SIGNING PLANS FOR SIGN LOCATIONS AND HEIGHT
2. MINUMUM ALLOWABLE TENSION CAPACITY FOR WEDGE ANCHORS = 3000 LBS.
3. MAXIMUM ALLOWABLE MOMENT FOR SIGN BASE = 5.13 kip-ft.
4. PAY ITEM "STEEL SIGN SUPPORT(X-INCH ROUND)(SLIPBASE)" SHALL INCLUDE STUB BASE, CASTING AND NECESSARY HARDWARE (SLIPBASE CASTING MOUNTING HARDWARE AS SHOWN ON THIS SHEET)
5. PAY ITEM "STEEL SIGN SUPPORT CASTING" SHALL INCLUDE CASTING AND NECESSARY MOUNTING HARDWARE (SLIPBASE CASTING MOUNTING HARDWARE AS SHOWN ON THIS SHEET)
6. PAY ITEM "STEEL SIGN GROUND STUB BASE (36 INCH)" SHALL INCLUDE SLIPBASE STUB BASE

CAST-IN-PLACE SLIPBASE FOR NEW INSTALLATIONS

Computer File Information		Sheet Revisions	
Creation Date: 07/04/12		Date:	Comments
Created By: KEN	R-2	03/01/24	Updated typical assembly to include a drilled hole into the post for the Hex Bolt and added an optional third washer between retaining plate and slipbase.
Last Modification Date: 03/01/24			
Last Modified By: YSaucedo	R-1	12/29/20	5/8" x 2 1/2" HEX BOLTS FROM GRADE 5, SIZE #4 TO GRADE A325 IN 'TYPICAL ASSEMBLY'
CAD Ver.: MicroStation V8 Scale: Not to Scale Units: English			

Colorado Department of Transportation
2829 W. Howard Pl.
Denver, CO 80204
Phone: 303-757-9654
FAX: 303-757-9219
Traffic & Safety Engineering EB

TUBULAR STEEL SIGN SUPPORT DETAILS

Issued By: Traffic & Safety Engineering Branch July 31, 2019

STANDARD PLAN NO.
S-614-8
Standard Sheet No. 3 of 7
Project Sheet Number:

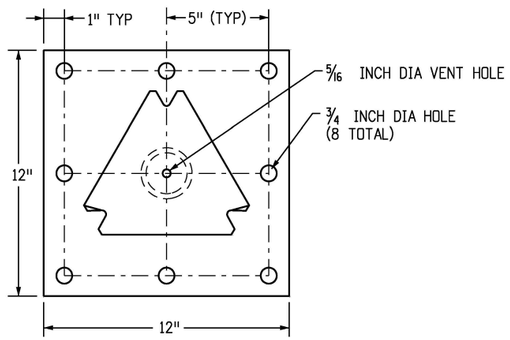

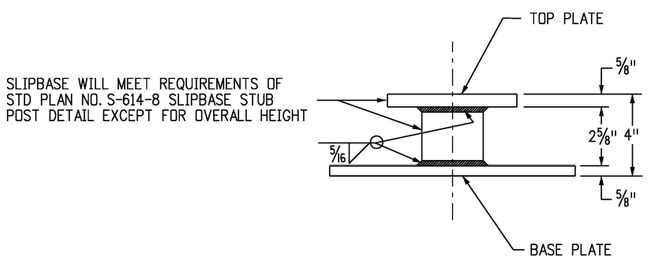

SURFACE MOUNT SLIPBASE BASE PLATE

SURFACE MOUNT SLIPBASE BASE PLATE FABRICATION REQUIREMENTS

BASE PLATE - 3/4 INCH ASTM A 36 PLATE STEEL
PIPE STUB - 3 INCH NOMINAL SCHEDULE 80, ASTM A-500 GRADE B
TOP PLATE - MEET REQUIREMENTS OF SHEET 3

MEET ASTM A-123 GALVANIZING AFTER FABRICATION IS COMPLETE

SURFACE MOUNT SLIPBASE TUBULAR STEEL SIGN BASE REQUIREMENTS

FOR 2-7/8 INCH POSTS (P1 OR P2 POSTS)
FOR CONCRETE SURFACES GREATER THAN 7 INCHES THICK
FOR CONCRETE SURFACES GREATER THAN 12 INCHES IN WIDTH

MOUNTING HARDWARE

8 - EACH 5/8 x 5 1/2 INCH LONG "HILTI KWIK HUS-EZ SCREW ANCHORS
16 - EACH 5/8 INCH FLAT WASHERS
8 - EACH 5/8 INCH LOCK WASHERS
8 - EACH 5/8 INCH NUTS

ALL HARDWARE WILL BE GALVANIZED OR ZINC PLATED.

INSTALLATION REQUIREMENTS:

DRILL: (8) - 5/8 INCH HOLES 6 INCH DEEP, CLEAN HOLE PRIOR TO INSTALLING ANCHORS

USE ADDITIONAL WASHERS FOR SHIMMING TO LEVEL BASE PLATE.

TUBULAR STEEL SIGN SUPPORT SURFACE MOUNT SLIPBASE NOTES

1. REFER TO SIGNING PLANS FOR SIGN LOCATIONS AND HEIGHT
2. REFER TO SHEET 3 FOR SLIPBASE CASTING INFORMATION
3. MINUMUM ALLOWABLE TENSION CAPACITY FOR WEDGE ANCHORS = 3000 LBS.
4. MAXIMUM ALLOWABLE MOMENT FOR SIGN BASE = 5.13 kip-ft.
5. PAY ITEM "STEEL SIGN SURFACE MOUNT BASE PLATE (SLIPBASE)" SHALL INCLUDE BASE PLATE, CASTING AND ALL NECESSARY HARDWARE (SLIPBASE CASTING MOUNTING HARDWARE AS SHOWN ON SHEET 3 AND SURFACE MOUNT SLIPBASE MOUNTING HARDWARE AS SHOWN ON THIS SHEET)
6. PAY ITEM "STEEL SIGN SURFACE MOUNT BASE PLATE" SHALL INCLUDE BASE PLATE AND NECESSARY HARDWARE (SURFACE MOUNT SLIPBASE MOUNTING HARDWARE AS SHOWN ON THIS SHEET)

SURFACE MOUNT SLIPBASE FOR RETROFIT INSTALLATIONS

Computer File Information		Sheet Revisions	
Creation Date: 04/12/18		Date:	Comments
Created By: DiNardo	R-1	03/01/24	Revised note 2, 5 and 6.
Last Modification Date: 03/01/24			
Last Modified By: YSaucedo			
CAD Ver.: MicroStation V8 Scale: Not to Scale Units: English			

Colorado Department of Transportation
2829 W. Howard Pl.
Denver, CO 80204
Phone: 303-757-9654
FAX: 303-757-9219
Traffic & Safety Engineering EB

TUBULAR STEEL SIGN SUPPORT DETAILS

Issued By: Traffic & Safety Engineering Branch July 31, 2019

STANDARD PLAN NO.
S-614-8
Standard Sheet No. 4 of 7
Project Sheet Number:

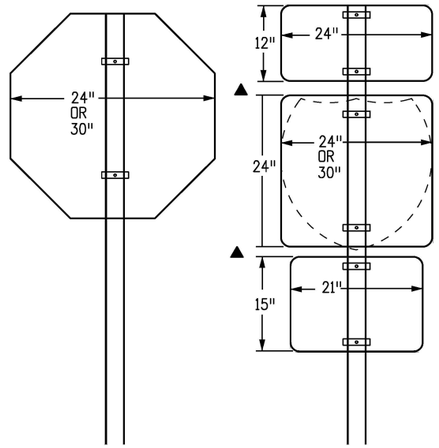

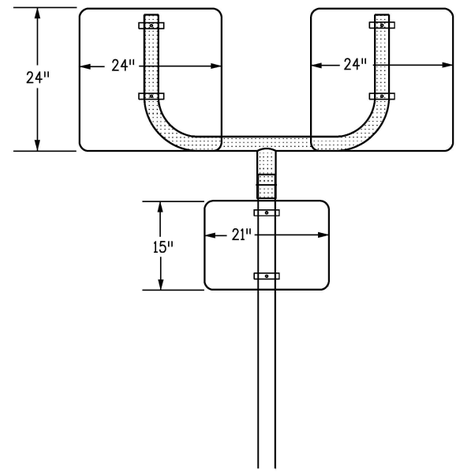

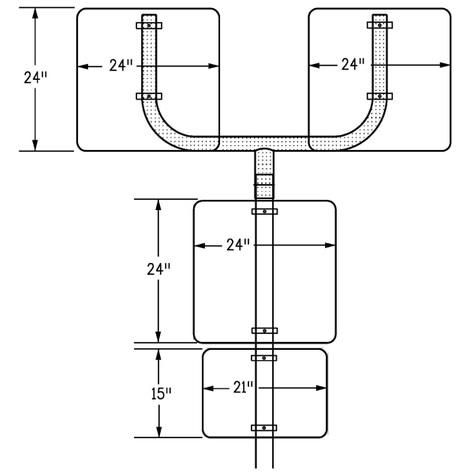

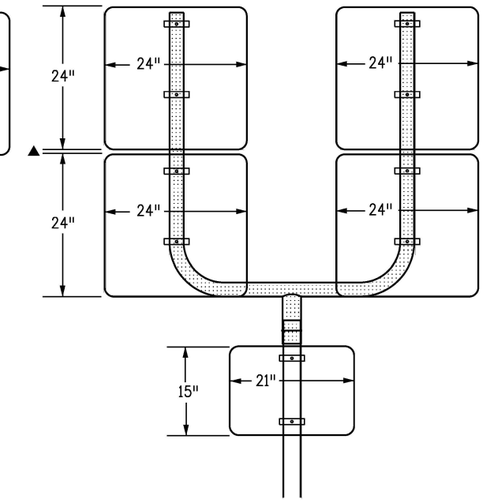

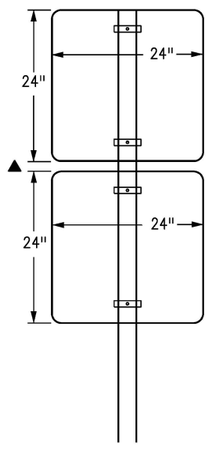

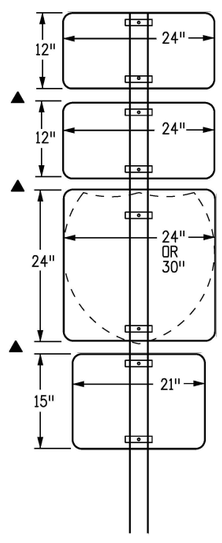

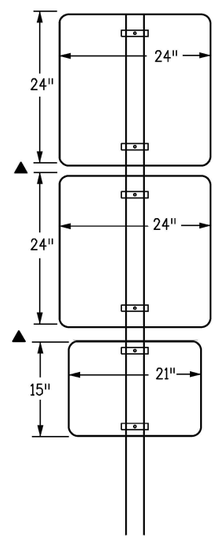

CLASS I SIGN COMBINATIONS (DIRECT ATTACHMENT)

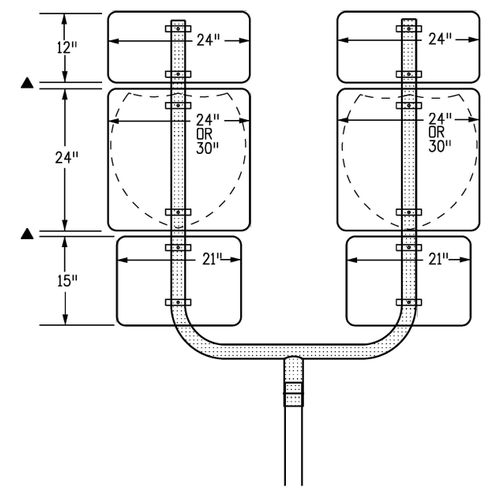

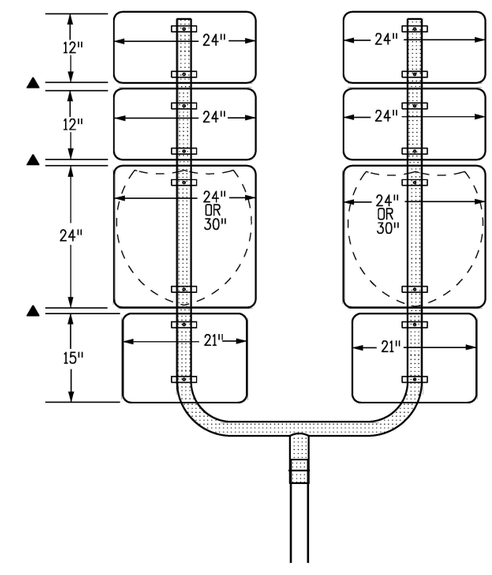

CLASS I SIGN COMBINATIONS USING U-BRACKETS

▲ SEE NOTE 6 ON SHEET 6

Computer File Information		Sheet Revisions	
Creation Date: 07/04/12		Date:	Comments
Created By: KEN	R-1	03/01/24	Revised reference note for vertical spacing.
Last Modification Date: 03/01/24			
Last Modified By: YSaucedo			
CAD Ver.: MicroStation V8 Scale: Not to Scale Units: English			

Colorado Department of Transportation
2829 W. Howard Pl.
Denver, CO 80204
Phone: 303-757-9654
FAX: 303-757-9219
Traffic & Safety Engineering EB

TUBULAR STEEL SIGN SUPPORT DETAILS

Issued By: Traffic & Safety Engineering Branch July 31, 2019

STANDARD PLAN NO.
S-614-8
Standard Sheet No. 5 of 7
Project Sheet Number:

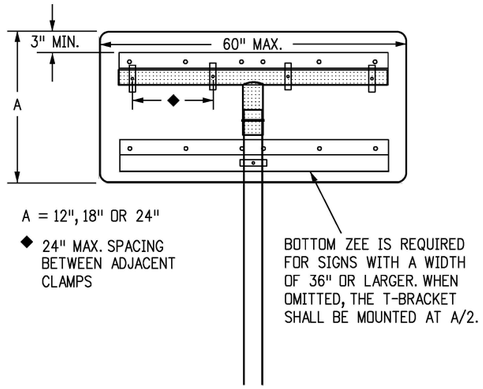

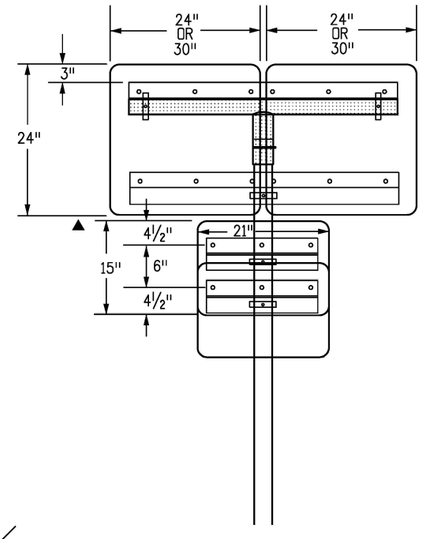

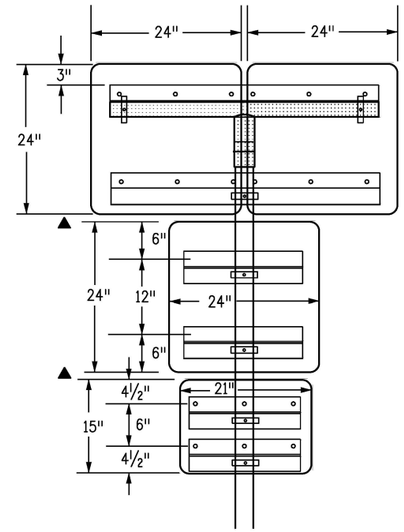

PANEL WIDTHS	ZEE LENGTH
21"	15"
24"	18"
30"	24"
36"	30"
42"	36"
45"	39"
48"	42"
54"	48"
60"	54"
36" DIAMOND	22"
48" DIAMOND	36"
24" & 24"	43"
24" & 30"	49"
30" & 30"	55"
36" & 36"	67"
45" & 36"	76"
24" & 24" & 24"	68"
24" & 24" & 30"	74"
24" & 30" & 24"	74"
30" & 24" & 30"	80"
24" & 30" & 30"	80"
30" & 30" & 30"	86"

NOTES

1. Z-BAR LENGTH SHALL BE 3 INCH (± ½ INCH) SHORT OF THE EDGE OF THE SIGN OR ROW OF SIGNS ON BOTH SIDES. THE ACCOMPANYING TABLE GIVES THE Z-BAR LENGTH FOR MOST TYPICAL PANEL COMBINATIONS.
2. FIRST AND LAST HOLES SHALL BE 2 INCH FROM EDGE OF Z-BAR. THE HOLES IN BETWEEN SHALL BE 6 INCH TO 8 INCH APART.
3. T AND U BRACKETS SHALL TERMINATE 2 INCHES TO 3 INCHES FROM EDGE OF SIGN PANEL. WHEN A ZEE IS CONNECTED TO A T-BRACKET, THEY SHALL BE THE SAME LENGTH EXCEPT WHEN THE ZEE MUST EXTEND BEYOND THE MAXIMUM LENGTH OF A T-BRACKET.
4. TWO MOUNTING CLAMPS ARE REQUIRED ON ZEES WHERE THERE IS ONLY ONE ZEE FOR THE PANEL AND THE ZEE IS ATTACHED TO ONLY ONE POST.
5. ZEES SHALL BE ATTACHED TO T-BRACKETS AND U-BRACKETS WITH U-BOLTS OR MOUNTING CLAMPS.
6. ▲ VERTICAL SPACING BETWEEN SIGN PANELS SHALL BE 1 INCH TO 1½ INCH TYPICAL.
7. IN SPECIAL CASES U-BRACKETS MAY BE USED TO MOUNT SIGNS THAT FACE DIFFERENT DIRECTIONS. THE ENGINEER SHALL DETERMINE THE ORIENTATION OF THE SIGN PANELS AND VERIFY THAT THE MAXIMUM ALLOWABLE WIND LOADS FOR THE POST ARE NOT EXCEEDED.

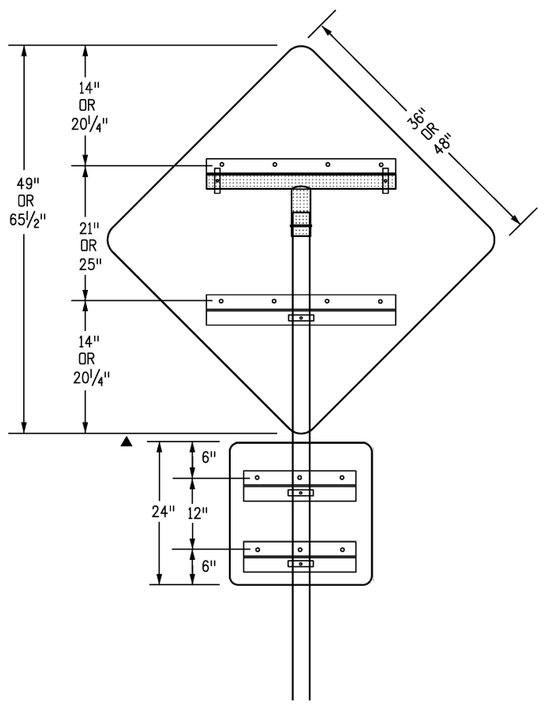

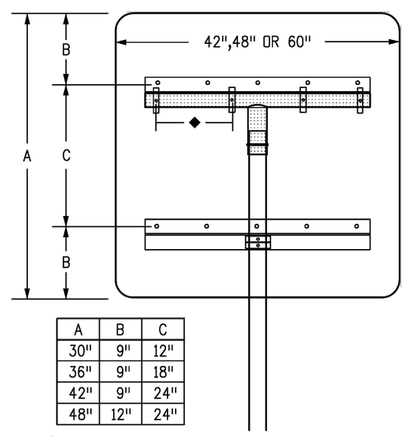

A	B	C
30"	9"	12"
36"	9"	18"
42"	9"	24"
48"	12"	24"

◆ 24" MAX. SPACING BETWEEN ADJACENT CLAMPS

CLASS II SIGN COMBINATIONS USING T-BRACKETS WITH Z-BAR

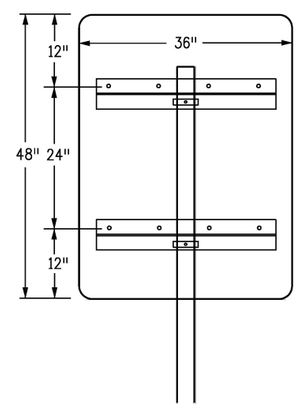

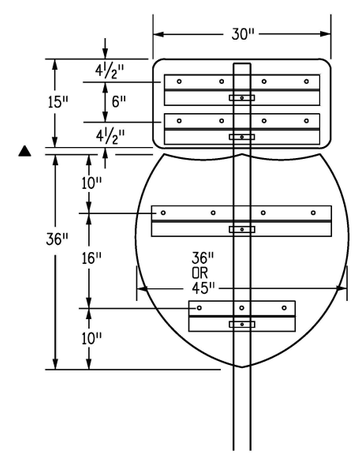

SINGLE POST CLASS II SIGNS USING Z-BAR

Computer File Information		Sheet Revisions	
Creation Date: 07/04/12		Date:	Comments
Created By: KEN	R-1	03/01/24	Revised note 6.
Last Modification Date: 03/01/24			
Last Modified By: YSaucedo			
CAD Ver.: MicroStation V8 Scale: Not to Scale Units: English			

Colorado Department of Transportation
2829 W. Howard Pl.
Denver, CO 80204
Phone: 303-757-9654
FAX: 303-757-9219
Traffic & Safety Engineering EB

TUBULAR STEEL SIGN SUPPORT DETAILS

Issued By: Traffic & Safety Engineering Branch July 31, 2019

STANDARD PLAN NO.
S-614-8
Standard Sheet No. 6 of 7
Project Sheet Number:

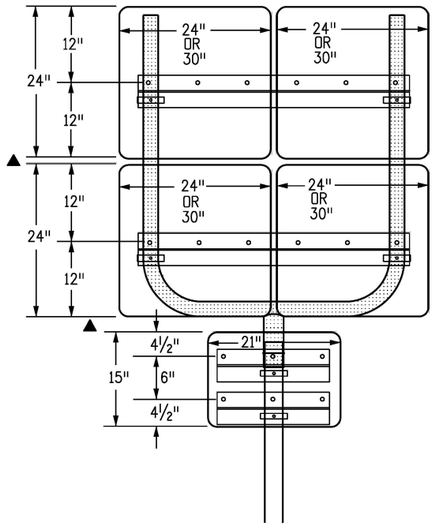

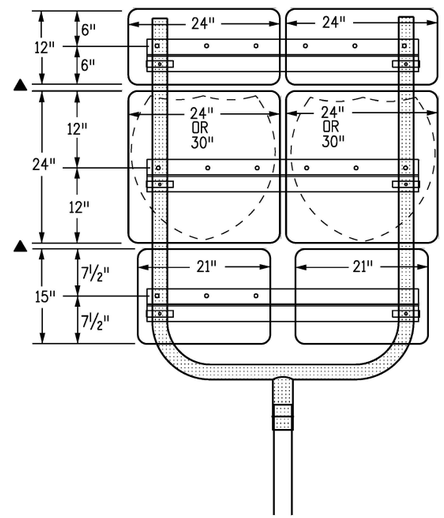

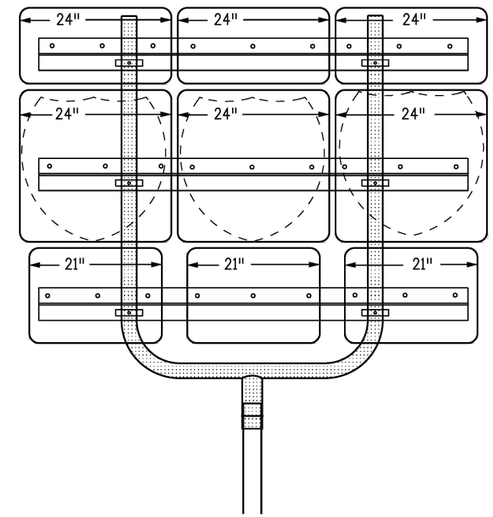

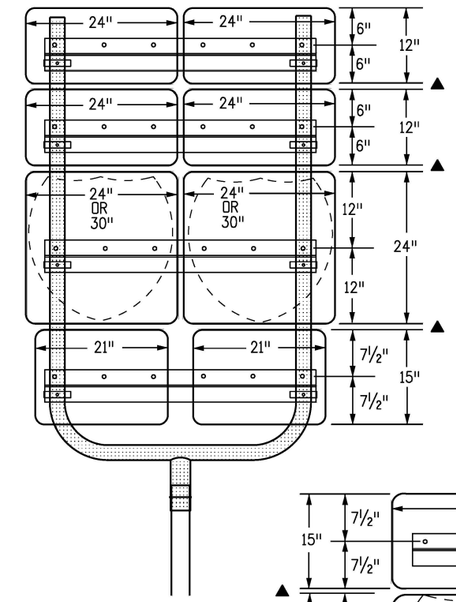

CLASS II SIGN COMBINATIONS USING U-BRACKETS

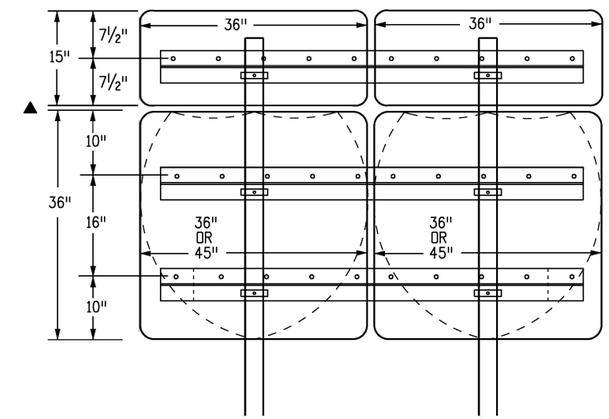

NOTE: THIS CONFIGURATION IS PREFERABLE TO USING TWO SEPARATE SIGNS.

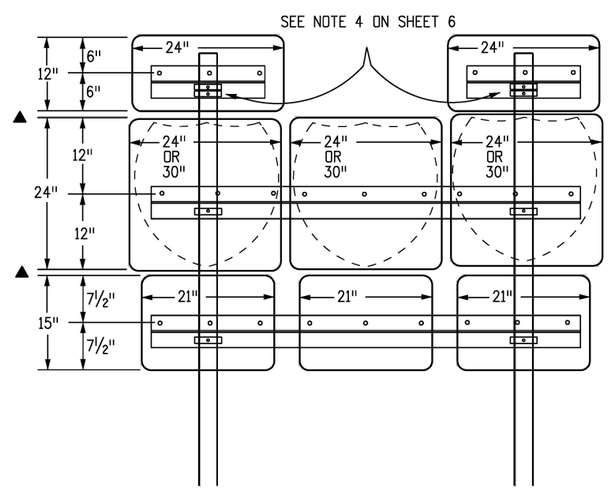

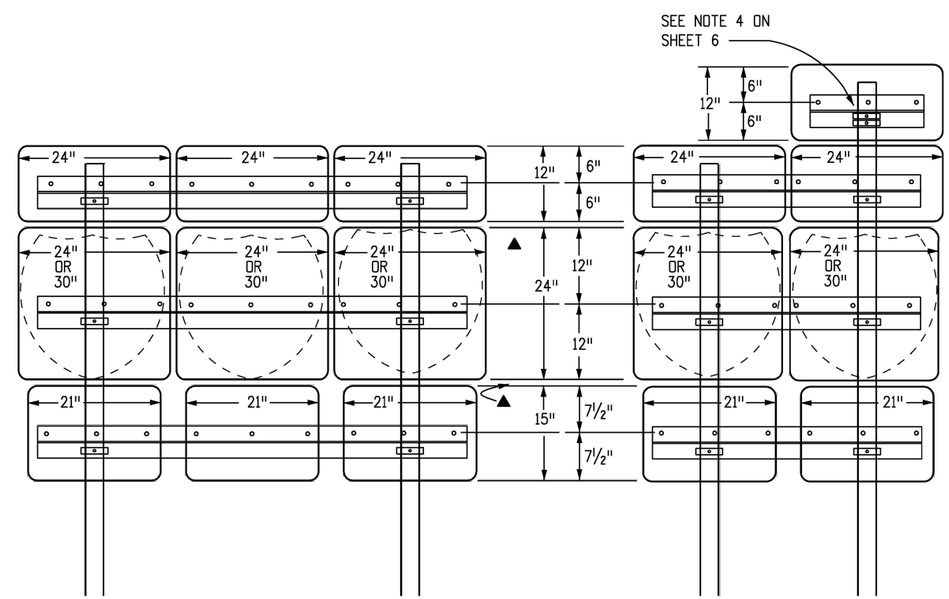

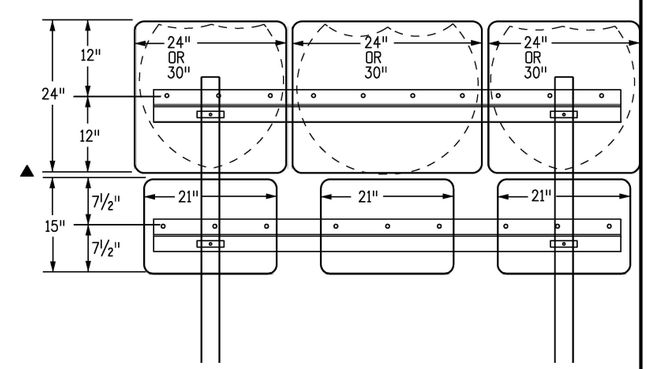

▲ SEE NOTE 6 ON SHEET 6

CLASS II SIGN COMBINATIONS USING TWO POSTS

Computer File Information		Sheet Revisions	
Creation Date: 07/04/12		Date:	Comments
Created By: KEN	R-1	03/01/24	Revised reference note for vertical spacing.
Last Modification Date: 03/01/24			
Last Modified By: YSaucedo			
CAD Ver.: MicroStation V8 Scale: Not to Scale Units: English			

Colorado Department of Transportation
2829 W. Howard Pl.
Denver, CO 80204
Phone: 303-757-9654
FAX: 303-757-9219
Traffic & Safety Engineering EB

TUBULAR STEEL SIGN SUPPORT DETAILS

Issued By: Traffic & Safety Engineering Branch July 31, 2019

STANDARD PLAN NO.
S-614-8
Standard Sheet No. 7 of 7
Project Sheet Number:

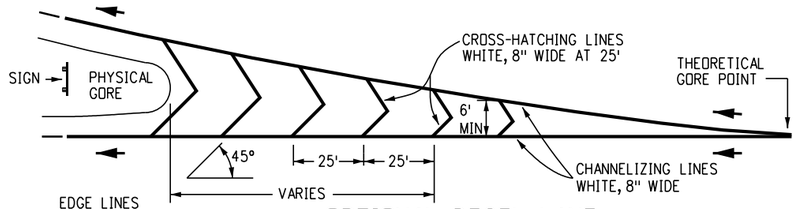

OPTIONAL DECEL LANE

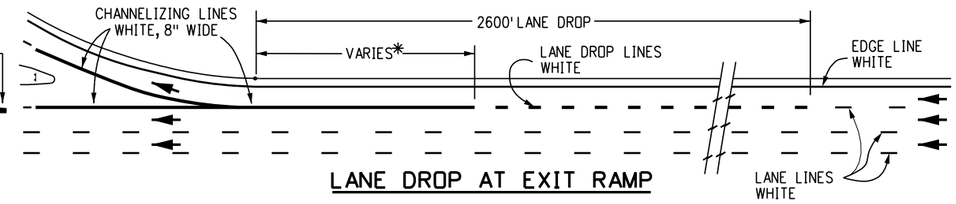

LANE DROP AT EXIT RAMP

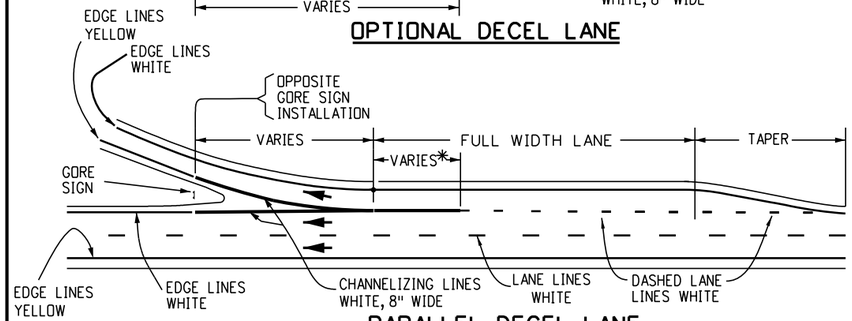

PARALLEL DECEL LANE

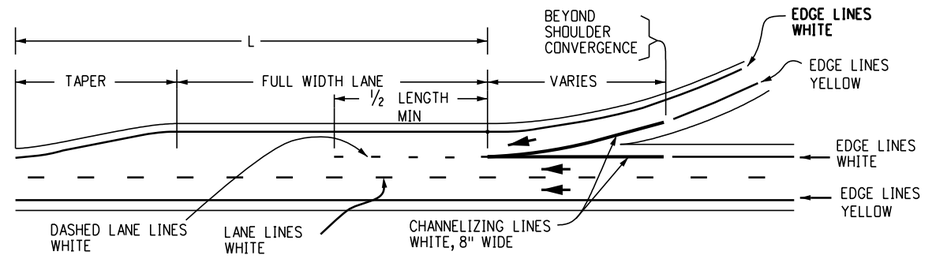

PARALLEL ACCEL LANE

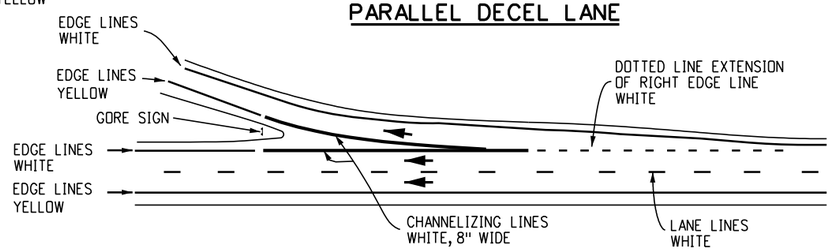

TAPERED DECEL LANE

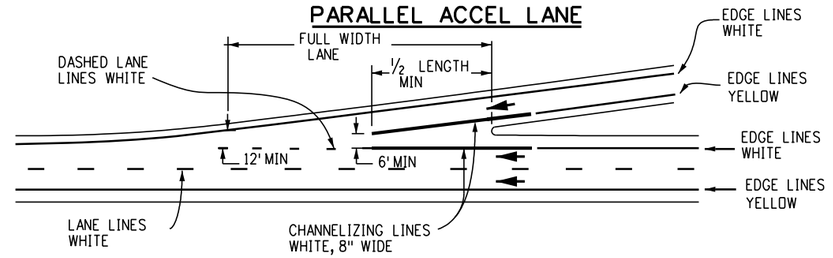

TAPERED ACCEL LANE
(YIELD SIGN OPTIONAL)

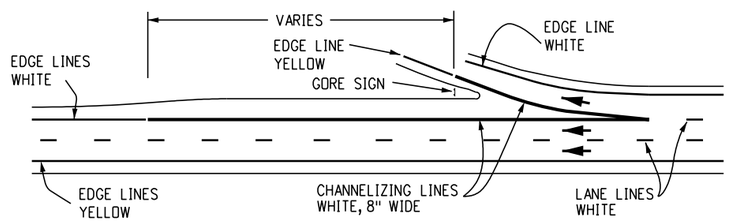

DECEL RECOVERY ZONE

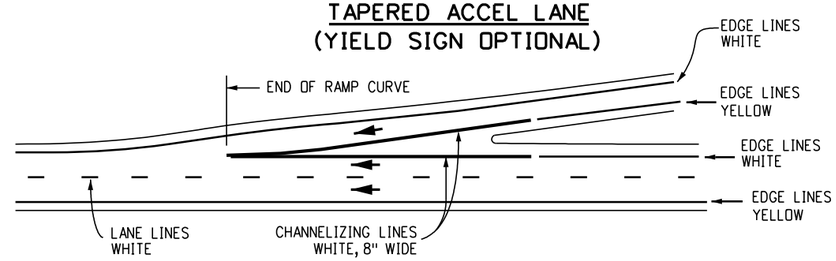

NO ACCEL LANE
(REQUIRES YIELD SIGN)

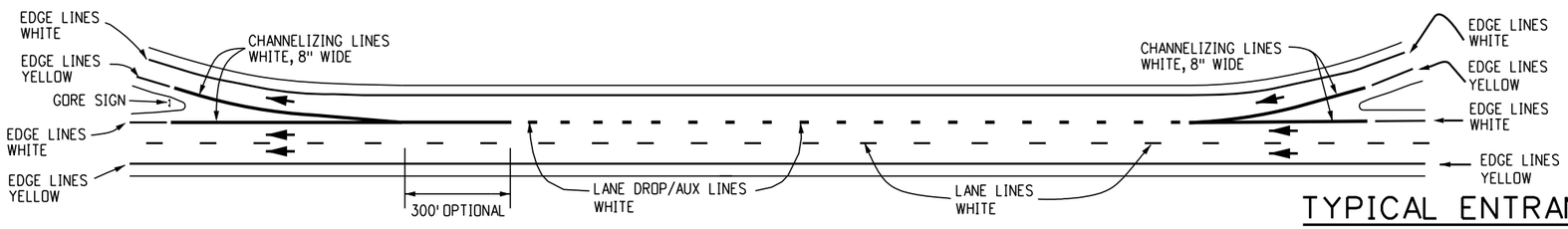

COMBINATION ACCEL-DECEL LANE

TYPICAL ENTRANCE AND EXIT RAMP MARKINGS

GENERAL NOTES

1. MINIMUM LONGITUDINAL PAVEMENT MARKING WIDTH

Facility Type	Speed	Edge Lines	Lane Lines	Center Lines[1]	Dotted Lane Lines	Lane Drop/ Aux Lines
2-Lane Facilities	All	6"	n/a	4"	n/a	n/a
3- Lane Facilities	All	6"	6"	4"	6"	8"
Multi-Lane Facilities	≥ 50 MPH	6"	6"	4"	6"	8"
Multi-Lane Facilities	≤ 45 MPH	4"	4"	4"	4"	8"

[1]Applies to facility types with double yellow lines, painted median, or undivided highway.

2. TEMPORARY PAVEMENT MARKING
   4 INCHES WIDE MARKING CAN BE USED INSTEAD OF 6 INCHES WIDE MARKING FOR TEMPORARY MARKING UNLESS OTHERWISE DIRECTED BY THE REGION TRAFFIC ENGINEER.

3. CENTER LINES
   a. BROKEN YELLOW, 4 INCHES WIDE 10-FOOT SEGMENTS WITH 30-FOOT GAPS.

   b. SOLID YELLOW, 4 INCHES WIDE.
   THESE LINES SEPARATE ADJACENT-OPPOSITE DIRECTION TRAFFIC LANES. DOUBLE LINES SHALL BE SPACED 4 INCHES APART.

4. LANE LINES
   a. BROKEN WHITE, 4 OR 6 INCHES WIDE 10-FOOT SEGMENTS WITH 30-FOOT GAPS.

   b. SOLID WHITE, 4 OR 6 INCHES WIDE.
   THESE LINES SEPARATE ADJACENT-SAME DIRECTION TRAFFIC LANES. A SOLID LINE MAY BE USED TO DISCOURAGE LANE CHANGING, WHILE TWO PARALLEL SOLID WHITE LINES ARE REQUIRED TO PROHIBIT LANE CHANGING.

5. EDGE LINES
   a. SOLID WHITE OR YELLOW EDGE LINES SHALL BE 4 OR 6 INCHES WIDE. YELLOW EDGE LINES SHALL BE USED ONLY FOR LEFT EDGE, IN THE DIRECTION OF TRAVEL OF DIVIDED STREETS AND HIGHWAYS (SEPARATED BY OTHER THAN A PAINTED MEDIAN) AND ONE-WAY ROADWAYS (INCLUDING RAMPS).

   b. EDGE LINES ARE NOT CONTINUED THROUGH INTERSECTIONS AND ARE NOT BROKEN FOR DRIVEWAYS. CARE MUST BE TAKEN TO AVOID EDGE LINE APPEARING AS LANE LINE ALONG ROADWAYS WITH WIDE SHOULDERS AND/OR CLOSELY SPACED DRIVEWAYS.

6. DOTTED LINE EXTENSIONS
   BROKEN WHITE, WIDTH MATCHING THE LINE BEING EXTENDED 2-FOOT SEGMENTS WITH 4-FOOT GAPS. THESE LINES ARE USED TO DELINEATE THE EXTENSION OF A LINE THROUGH AN INTERSECTION OR INTERCHANGE AREA.

7. LANE DROP / AUX LINES
   BROKEN WHITE, 8 INCHES WIDE 3-FOOT SEGMENTS WITH 12-FOOT GAPS. THESE LINES SHOULD BEGIN 2600 FEET IN ADVANCE OF THE THEORETICAL GOREPOINT TO DISTINGUISH THE LANE DROP FROM A CONTINUOUS LANE.

8. DASHED LANE LINES
   BROKEN WHITE, 4 OR 6 INCHES WIDE 3-FOOT SEGMENTS WITH 12-FOOT GAPS. LINE WIDTH SHALL MATCH THE ADJACENT LANE LINE. THESE LINES SEPARATE A THROUGH LANE FROM AN ADJACENT DECELERATION OR ACCELERATION LANE.

9. CHANNELIZING LINES
   SOLID WHITE, 8 INCHES WIDE. THESE LINES ARE USED WITH ACCELERATION-DECELERATION LANES, PAVEMENT WIDTH TRANSITIONS, AND LEFT-RIGHT TURN SLOTS OR ISLANDS.

   * THE CHANNELIZING LINE MAY BE EXTENDED 300 FEET (TYPICAL) UPSTREAM FROM THE THEORETICAL GORE. FINAL LENGTH DEPENDS ON SITE CONDITIONS.

(CONTINUED ON SHEET NO. 2)

Computer File Information
Creation Date: 07/04/12
Created By: SCL
Last Modification Date: 01/14/26
Last Modified By: NRIVERA
CAD Ver.: MicroStation V8 Scale:Not to Scale Units: English

	Sheet Revisions	
	Date:	Comments
R-7	01/14/26	11TH EDITION MUTCD NOTES UPDATE
R-6	12/20/24	DASHED LANE LINE UPDATE
R-5	04/30/24	FORMATTING
R-4	04/14/23	UPDATED NUMBER OF SHEETS

Colorado Department of Transportation
2829 W. Howard Pl.
Denver, CO 80204
Phone: 303-757-9654
FAX: 303-757-9219
Traffic Safety & Engineering
EB

PAVEMENT MARKINGS

Issued By: Traffic Safety & Engineering Branch July 31, 2019

STANDARD PLAN NO.
S-627-1
Standard Sheet No. 1 of 11
Project Sheet Number:

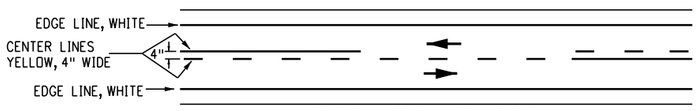

TWO LANE HIGHWAY

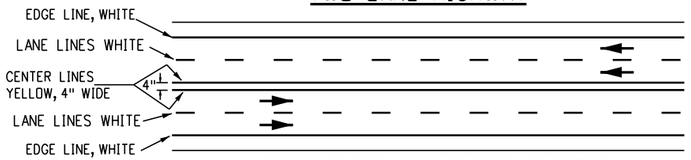

FOUR LANE UNDIVIDED HIGHWAY

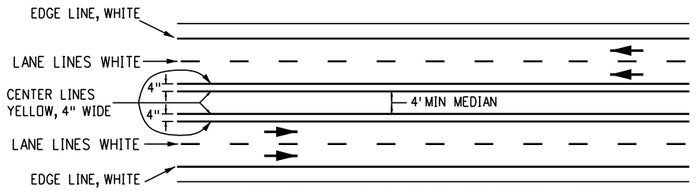

FOUR LANE PAINT DIVIDED HIGHWAY

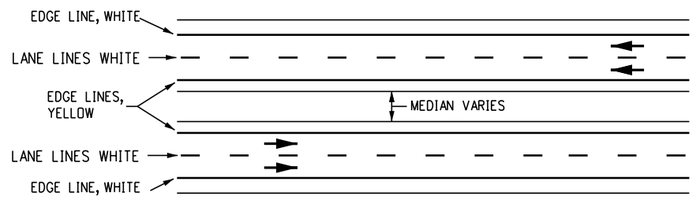

FOUR LANE DIVIDED HIGHWAY

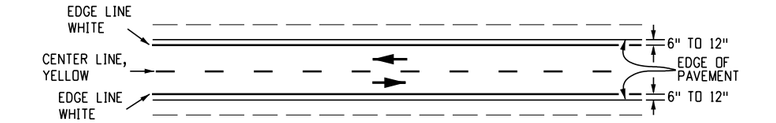

NOTE: EDGE LINES ARE NOT TO BE USED WHEN TRAVELED WAY IS LESS THAN 20 FEET.

NO SHOULDER OR UNSURFACED SHOULDER

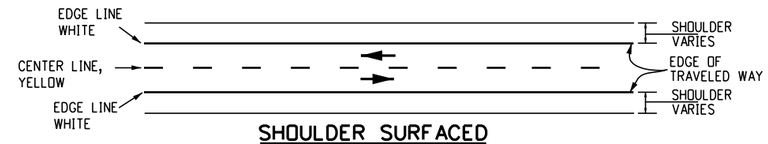

SHOULDER SURFACED

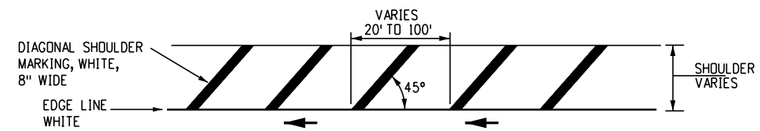

EDGE LINE WITH OPTIONAL DIAGONAL SHOULDER MARKING

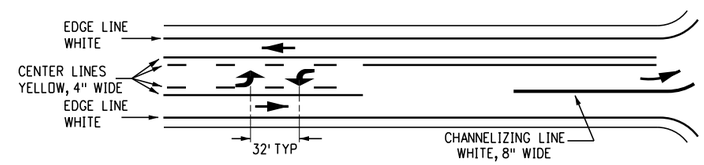

TYPICAL TWO WAY LEFT TURN LANE

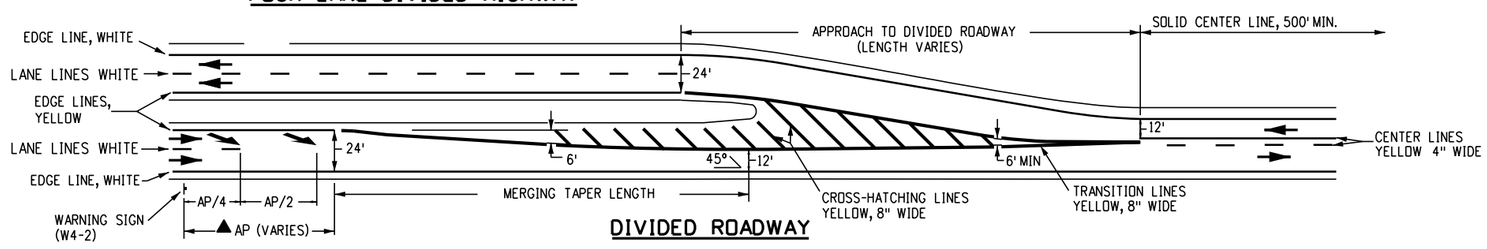

DIVIDED ROADWAY

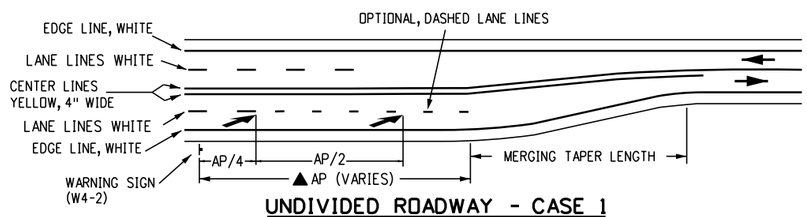

UNDIVIDED ROADWAY - CASE 1

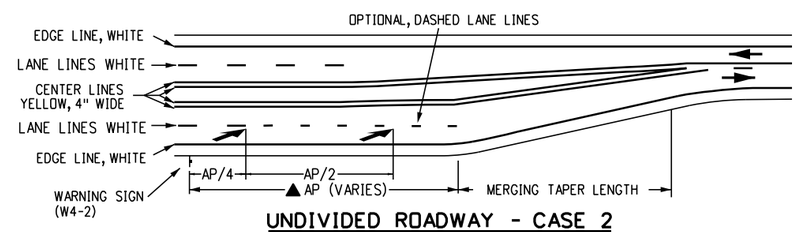

UNDIVIDED ROADWAY - CASE 2

TYPICAL PAVEMENT WIDTH TRANSITION MARKINGS

GENERAL NOTES

(CONTINUED FROM SHEET NO. 1)

10. CROSS-HATCHING LINES
    a. SOLID WHITE OR YELLOW, 8 INCHES WIDE-45 DEGREE DIAGONAL, SPACED AT 25 FEET INTERVALS. THESE LINES ARE OPTIONAL AND MAY BE PLACED AT LOCATIONS INDICATED ON THE PLANS OR DETERMINED BY THE ENGINEER. YELLOW SHALL BE USED FOR PAINTED MEDIANS OR PAVEMENT WIDTH TRANSITIONS ONLY.

    b. OPTIONAL DIAGONAL SHOULDER MARKINGS SHALL BE SOLID WHITE, 8 INCHES WIDE, SPACED AT INTERVALS OF 20 FEET MINIMUM TO 100 FEET MAXIMUM.

11. PARKING LINES
    SOLID WHITE, 3 INCHES WIDE-DIAGONAL OR PARALLEL AS SHOWN ON THE PLANS OR DIRECTED BY THE ENGINEER.

12. STOP LINES
    SOLID WHITE, 24 INCHES WIDE-EXTEND PARALLEL TO INTERSECTED ROADWAY ACROSS ALL APPROACH LANES OR AS INDICATED AT LOCATIONS ON THE PLANS. LOCATE AT THE DESIRED STOPPING POINT, NOT MORE THAN 30 FEET, NOR LESS THAN 4 FEET FROM THE NEAREST EDGE OF THE INTERSECTED TRAFFIC LANE.

13. YIELD LINES
    a. SOLID WHITE, THE INDIVIDUAL TRIANGLES COMPRISING YIELD LINES SHALL HAVE A BASE OF 12 TO 24 INCHES WIDE AND A HEIGHT EQUAL TO 1.5 TIMES THE BASE AND SHALL BE PARALLEL TO THE INTERSECTED ROADWAY ACROSS ALL APPROACH LANES OR AS INDICATED AT LOCATIONS ON THE PLANS.

    b. THE SPACE BETWEEN EACH TRIANGLE SHALL BE 3 TO 12 INCHES.

14. CROSSWALK LINES
    a. SOLID WHITE, 12 INCHES WIDE FOR TRANSVERSE LINE TYPE EXTEND ACROSS ENTIRE WIDTH OF PAVEMENT. IF NO ADVANCE STOP LINE IS PROVIDED, INCREASE THE WIDTH OF THE CROSSWALK LINES TO 24 INCHES. THE DISTANCE BETWEEN THE LINES IS USUALLY DETERMINED BY THE WIDTH OF THE SIDEWALKS CONNECTED, IN ANY CASE THIS SHALL NOT BE LESS THAN 6 FEET.

    b. COMPLICATED AND/OR CHANNELIZED INTERSECTIONS AND MID-BLOCK CROSSWALKS SHALL BE SOLID WHITE, 12 INCHES TO 24 INCHES WIDE AND 8 TO 10 FEET LONG FOR LONGITUDINAL LINE TYPE AS DETAILED IN THE PLANS OR AS DIRECTED BY THE ENGINEER.

15. WORD, ARROW AND SYMBOL MARKINGS
    ALL LETTERS, ARROWS AND SYMBOLS SHALL BE IN CONFORMANCE WITH "THE STANDARD ALPHABETS FOR HIGHWAY SIGNS AND PAVEMENT MARKINGS" ADOPTED BY THE FEDERAL HIGHWAY ADMINISTRATION.

16. MERGING TAPER LENGTH
    L = MINIMUM LENGTH OF TAPER.
    S = DESIGN SPEED FOR NEW CONSTRUCTION OR NUMERICAL VALUE OF THE POSTED SPEED LIMIT OF THE 85TH PERCENTILE SPEED OF EXISTING TRAFFIC.
    W = WIDTH TRANSITIONED.

    FORMULA: FOR SPEED 45 MPH OR MORE, $L=S \times W$

    FOR SPEED 40 MPH OR LESS, $L=\frac{WS^2}{60}$

17 TRANSITION LINES
    SOLID YELLOW, 8 INCHES WIDE. THESE LINES ARE USED WHERE ADDITIONAL EMPHASIS OR VISIBILITY IS DESIRABLE AT PAVEMENT WIDTH TRANSITIONS. PLACE AT LOCATIONS INDICATED ON THE PLANS OR AS DIRECTED BY THE ENGINEER.

18. SPEED MEASURING MARKING
    SOLID WHITE, 24 INCHES EXTEND 4 FEET FROM OUTSIDE OF EDGE LINES ON SHOULDERS.

19. ALL SPACING IS DETERMINED CENTER ON CENTER EXCEPT FOR DOUBLE LINES.

▲ NOTE:

AP = ADVANCE PLACEMENT DISTANCE FROM THE LANE ENDS SIGN (W4-2) TO THE BEGINNING OF THE MERGING TAPER. SEE SECTION 2C OF THE MUTCD FOR ADVANCE PLACEMENT DISTANCES.

LEGEND

→ Direction of Travel

Computer File Information		Sheet Revisions	
Creation Date: 07/04/12		Date:	Comments
Created By: KEN	R-6	12/20/24	UPDATE DASHED LANE LINES
Last Modification Date: 12/20/24	R-5	04/30/24	LANE REDUCTION ARROWS ADDED UPDATED UNDIVIDED AND DIVIDED ROADWAY
Last Modified By: NRIVERA	R-4	04/14/23	ADD GENERAL NOTE 13 & UPDATE NUMBER OF SHEETS
CAD Ver.:MicroStation V8 Scale:Not to Scale Units: English	R-3	07/22/22	GENERAL NOTES UPDATE

Colorado Department of Transportation
2829 W. Howard Pl.
Denver, CO 80204
Phone: 303-757-9654
FAX: 303-757-9219
Traffic Safety & Engineering EB

PAVEMENT MARKINGS

Issued By: Traffic Safety & Engineering Branch July 31, 2019

STANDARD PLAN NO.
S-627-1
Standard Sheet No. 2 of 11
Project Sheet Number:

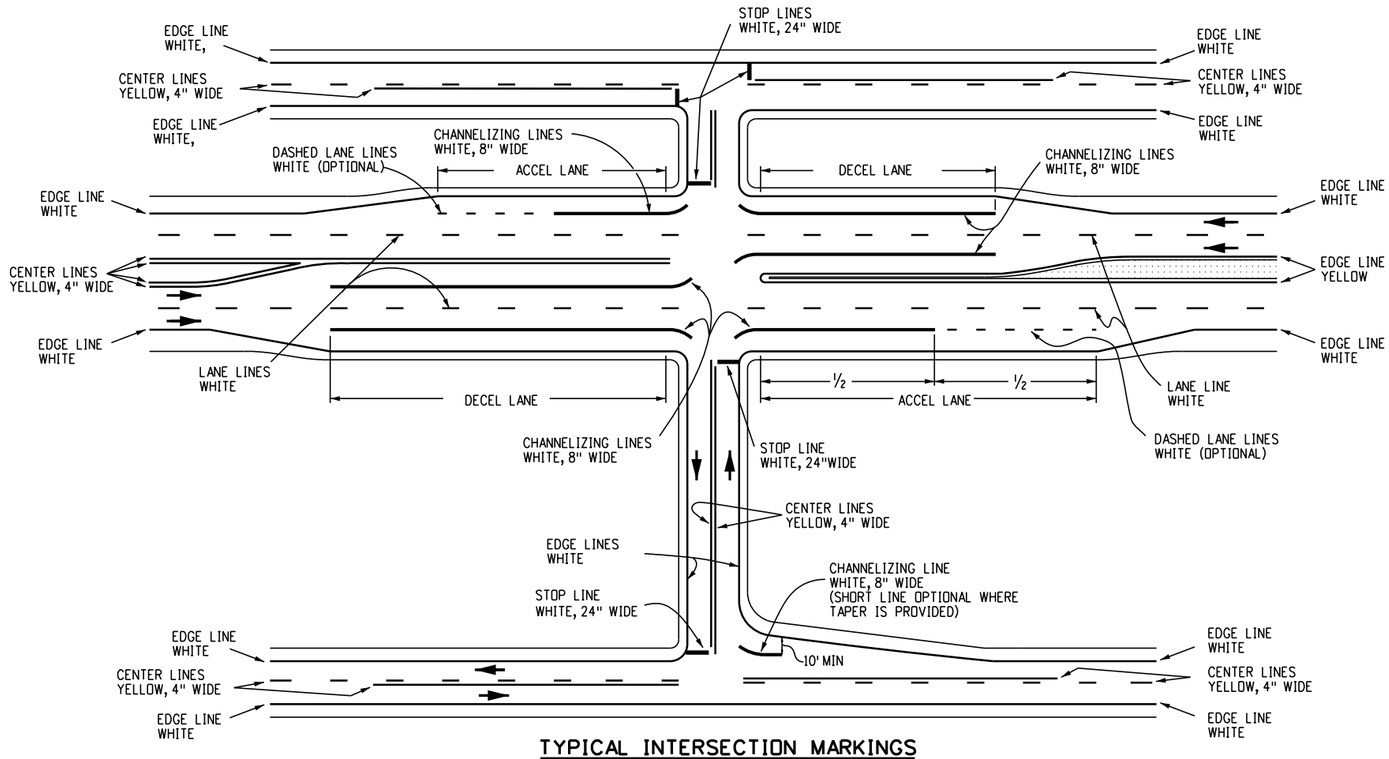

TYPICAL INTERSECTION MARKINGS

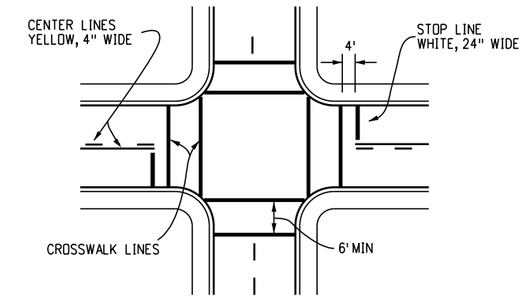

TYPICAL TRANSVERSE LINE CROSSWALK MARKINGS

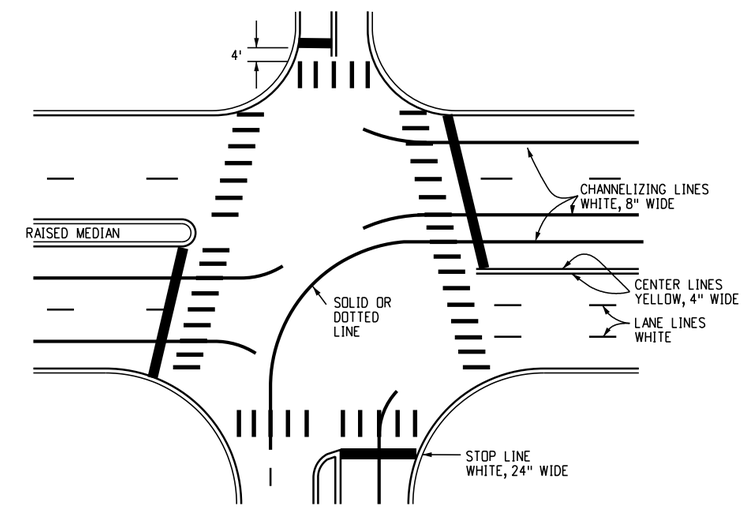

TYPICAL CONTINENTAL CROSSWALK MARKINGS

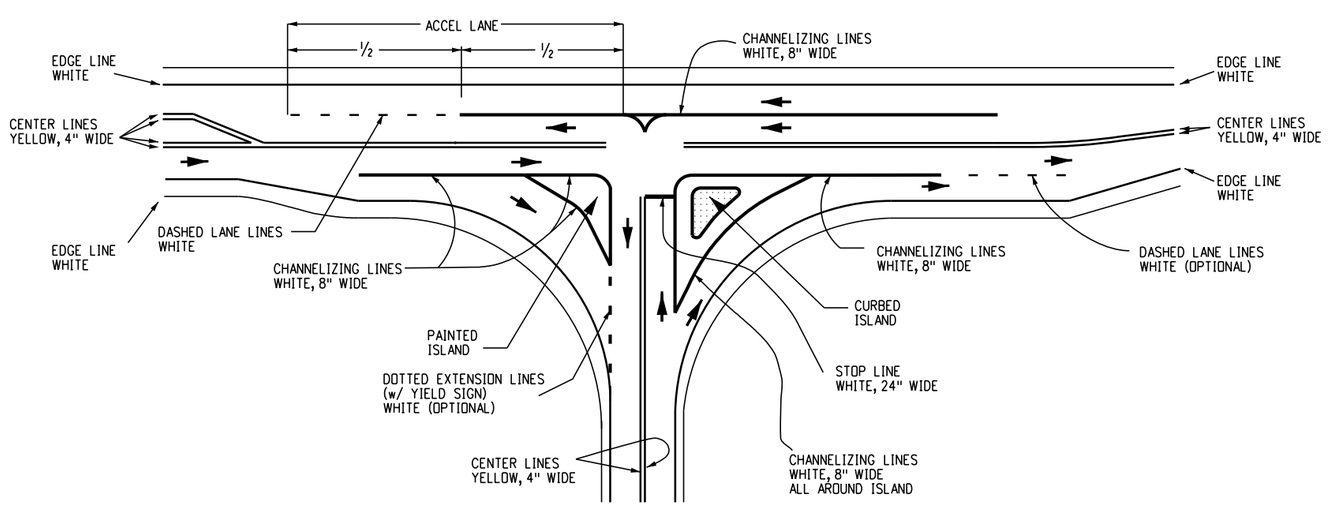

TYPICAL ISLAND MARKINGS

CROSSWALK LINE DETAIL

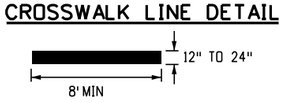

LEGEND

→ Direction of Travel

CONTINENTAL CROSSWALK NOTES

1. CENTER CROSSWALKS ON CURB RAMPS. IF SUCH RAMPS ARE NOT PROVIDED, CENTER ON SIGNAL POLES WHEREVER PRACTICAL.
2. CENTER CROSSWALKS ON EDGE LINES, LANE LINES AND CHANNELIZING LINES.
3. CENTER CROSSWALKS BETWEEN ADJACENT LINES.
4. MARKINGS SHALL NOT BE WITHIN WHEEL PATH OF VEHICLES.
5. CENTER ON EXTENDED FLOW LINE.
6. LINES AND SPACES TO APPROXIMATE ADJACENT PATTERN.

INTERSECTIONS, ISLANDS AND CROSSWALKS

Computer File Information	
Creation Date: 07/04/12	
Created By: JSW	
Last Modification Date: 12/20/24	
Last Modified By: NRIVERA	
CAD Ver.: MicroStation V8 Scale: Not to Scale Units: English	

	Sheet Revisions	
	Date:	Comments
R-5	12/20/24	UPDATED DASHED LANE LINES
R-4	04/14/23	UPDATED NUMBER OF SHEETS
R-3	07/22/22	Changed AccelLane Lines To Dotted Lane Lines
R-2	02/16/21	ADDED DEC TAPER TO TYPICAL ISLAND MARKINGS

Colorado Department of Transportation
2829 W. Howard Pl.
Denver, CO 80204
Phone: 303-757-9654
FAX: 303-757-9219
Traffic Safety & Engineering EB

PAVEMENT MARKINGS

Issued By: Traffic Safety & Engineering Branch July 31, 2019

STANDARD PLAN NO.
S-627-1
Standard Sheet No. 3 of 11
Project Sheet Number:

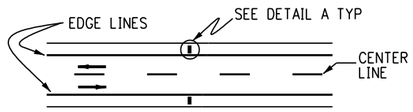

TWO - WAY ROADWAY

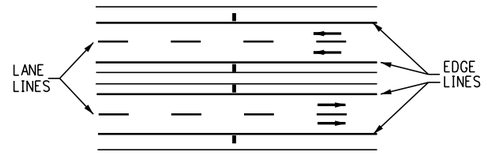

MULTI - LANE DIVIDED HIGHWAY

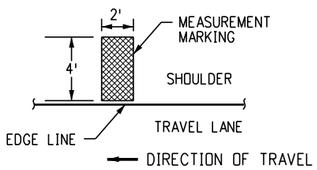

DETAIL A

TYPICAL SPEED MEASUREMENT MARKING

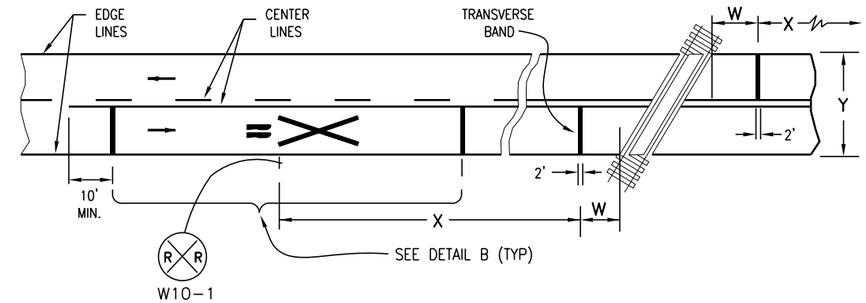

TYPICAL PAVEMENT MARKING AT RAILROAD CROSSING

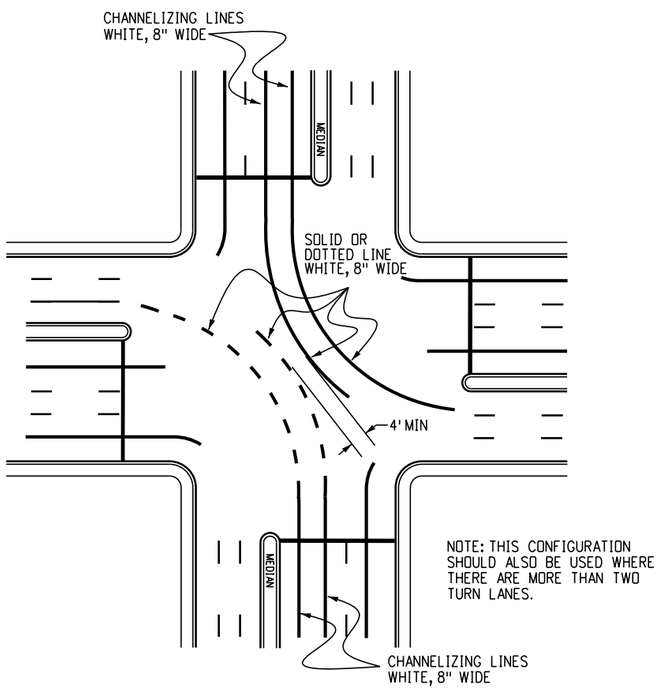

TYPICAL DOUBLE LEFT TURN MARKINGS

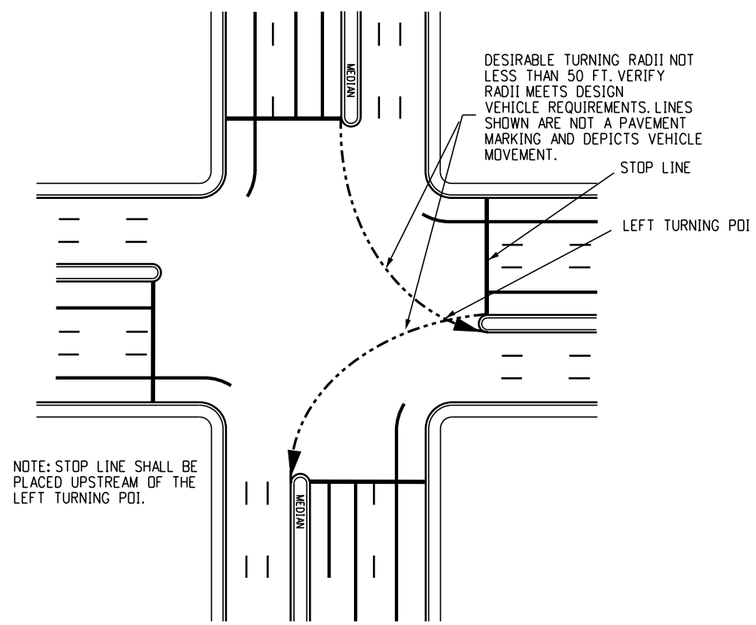

TYPICAL STOP LINE PLACEMENT

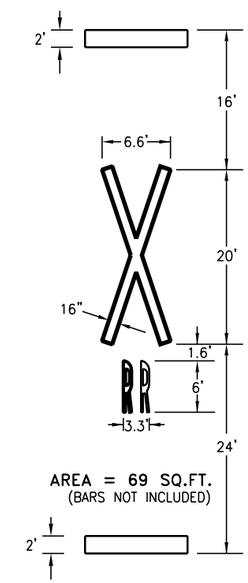

DETAIL B

W= APPROXIMATELY 15 FT. (STOP LINE SHOULD BE 8' IN ADVANCE OF ACTIVE TRAFFIC CONTROL SYSTEMS; I.E., AUTOMATIC GATES AND/OR FLASHING SIGNALS).

X= THE DISTANCE FROM THE RAILROAD CROSSING MARKING TO THE NEAREST TRACK WILL VARY ACCORDING TO THE APPROACH SPEED AND THE SIGHT DISTANCE OF THE VEHICULAR TRAFFIC APPROACHING, BUT NOT LESS THAN 100 FT. (REFERENCE NOTE 1).

Y= ON MULTI-LANE ROADS THE TRANSVERSE BANDS SHOULD EXTEND ACROSS ALL APPROACH LANES, AND INDIVIDUAL RR SYMBOLS SHOULD BE USED IN EACH APPROACH LANE.

NOTES

1. THE WARNING SIGN SHALL BE PLACED ACCORDING TO THE WARNING SIGN PLACEMENT TABLE IN THE MUTCD (CHAPTER 2C, TABLE 2C-3). IF CONDITIONS DO NOT ALLOW PLACEMENT ACCORDING TO THE TABLE, IT SHALL BE AS APPROVED BY THE ENGINEER.

2. FOR RR SYMBOL DETAILS, REFER TO "THE STANDARD ALPHABETS FOR HIGHWAY SIGNS AND PAVEMENT MARKINGS", ADOPTED BY THE FEDERAL HIGHWAY ADMINISTRATION.

Computer File Information		Sheet Revisions	
Creation Date: 07/04/12		Date:	Comments
Created By: SCL	R-4	04/14/23	UPDATED NUMBER OF SHEETS
Last Modification Date: 04/14/23			
Last Modified By: AVu			
CAD Ver.: MicroStation V8 Scale: Not to Scale Units: English			

Colorado Department of Transportation
2829 W. Howard Pl.
Denver, CO 80204
Phone: 303-757-9654
FAX: 303-757-9219
Traffic Safety & Engineering EB

PAVEMENT MARKINGS

Issued By: Traffic Safety & Engineering Branch July 31, 2019

STANDARD PLAN NO.
S-627-1
Standard Sheet No. 4 of 11
Project Sheet Number:

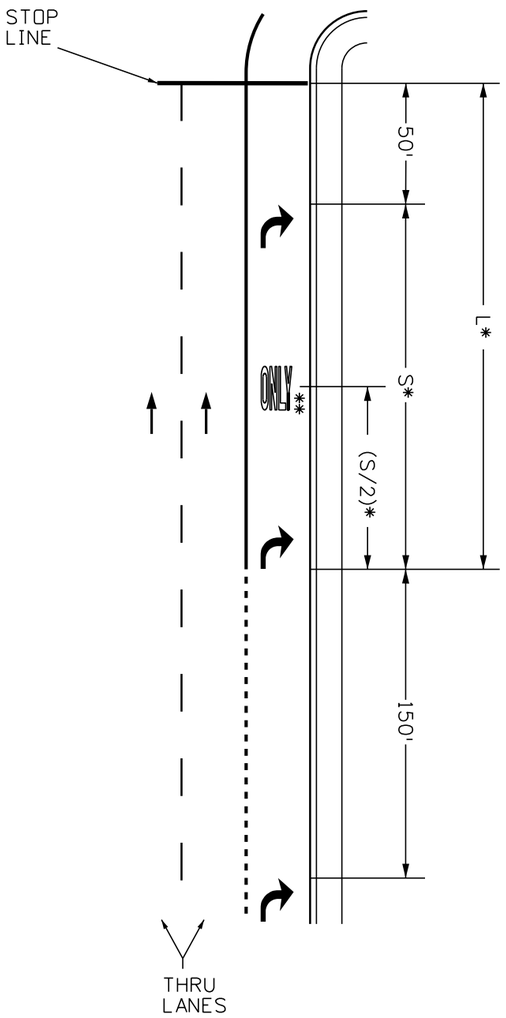

LANE DROP

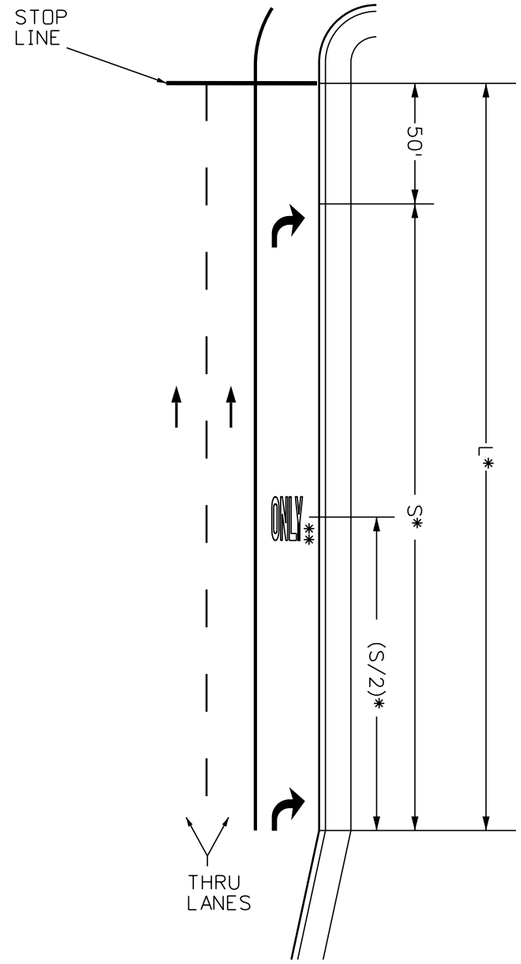

POCKET LANE

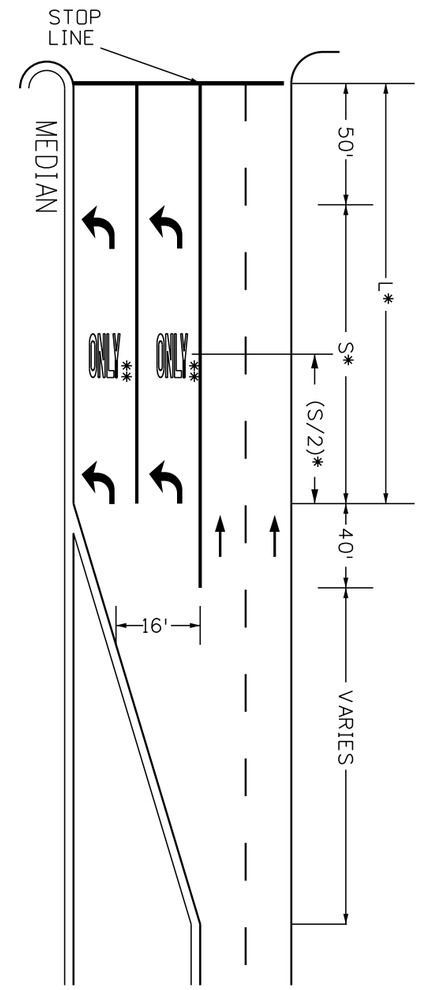

DOUBLE TURNING

GENERAL NOTES

1. THE SPACING, IN THE TABLE APPLIES TO LEFT & RIGHT TURN LANES.

* 2. THE 'ONLY' WORD MARKING IS OPTIONAL. CONTACT THE REGION TRAFFIC ENGINEER FOR GUIDANCE.

3. WHEN ONE (1) ARROW IS USED, IT SHALL BE PLACED AT THE BEGINNING OF THE FULL WIDTH TURN LANE, OTHERWISE USE THE TABLE BELOW FOR ARROW PLACEMENT.

LENGTH (L)	LEFT AND RIGHT TURN ARROW		NO. OF 'ONLY' PER LANE
	NO. OF ARROWS PER LANE	SPACING (S)	
L < 200'	1	NA	NA
200' - 350'	2	EVENLY SPACED BETWEEN 150'-300'	1
350' - 650'	3		2
650' - 950'	4		3
950' ≤	≥5		≥4

*L (LENGTH) AND *S (SPACING) PROVIDED IN THE TABLE ABOVE WILL HELP DETERMINE THE NUMBER OF ARROWS AND ONLY MARKINGS NEEDED PER LANE.

LEGEND

→ Direction of Travel

ARROW PLACEMENTS AT INTERSECTIONS

Computer File Information	
Creation Date: 02/08/17	
Created By: MBhat	
Last Modification Date: 01/24/26	
Last Modified By: AVu	
CAD Ver.: MicroStation V8 Scale: Not to Scale Units: English	

	Sheet Revisions	
	Date:	Comments
R-2	01/24/26	REVISED NOTE 2
R-1	04/14/23	UPDATED NUMBER OF SHEETS

Colorado Department of Transportation
2829 W. Howard Pl.
Denver, CO 80204
Phone: 303-757-9654
FAX: 303-757-9219
Traffic Safety & Engineering EB

PAVEMENT MARKINGS

Issued By: Traffic Safety & Engineering Branch July 31, 2019

STANDARD PLAN NO.
S-627-1
Standard Sheet No. 5 of 11
Project Sheet Number:

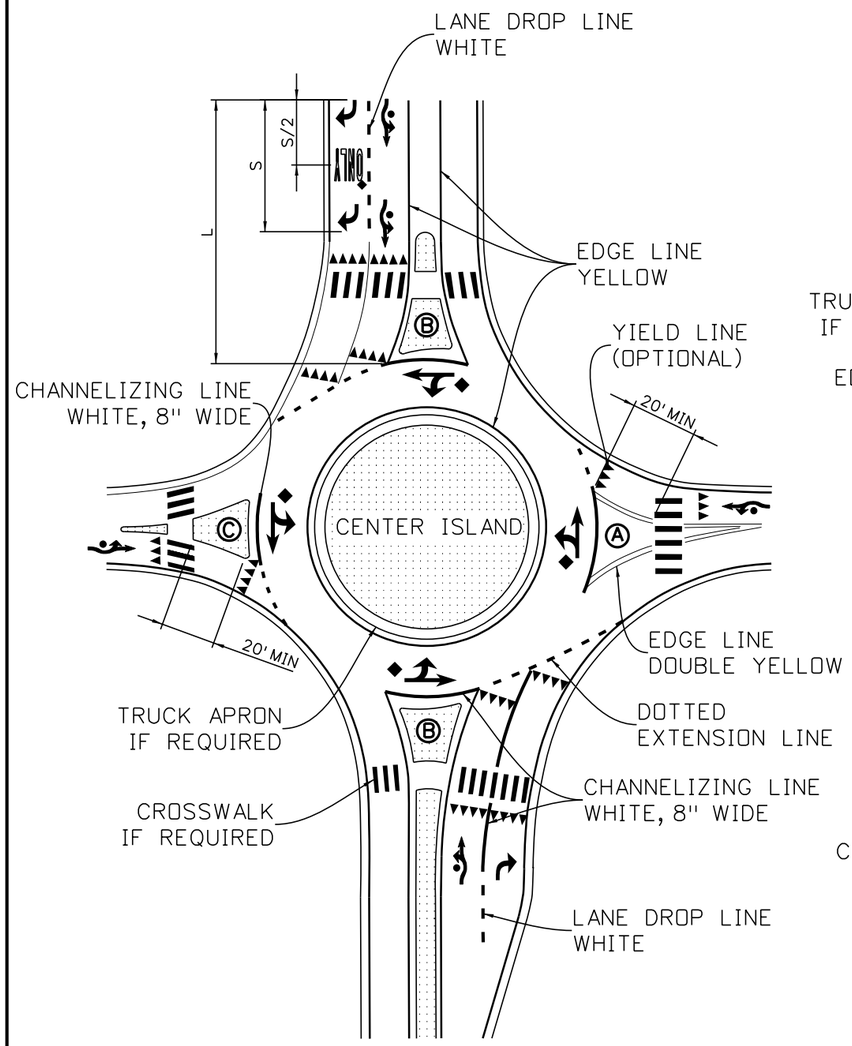

SINGLE LANE ROUNDABOUT (TYPICAL)

NOTE: SPLITTER ISLAND MAY BE FORMED BY TWO YELLOW LINES, RAISED NON-MOUNTABLE, OR RAISED MOUNTABLE.

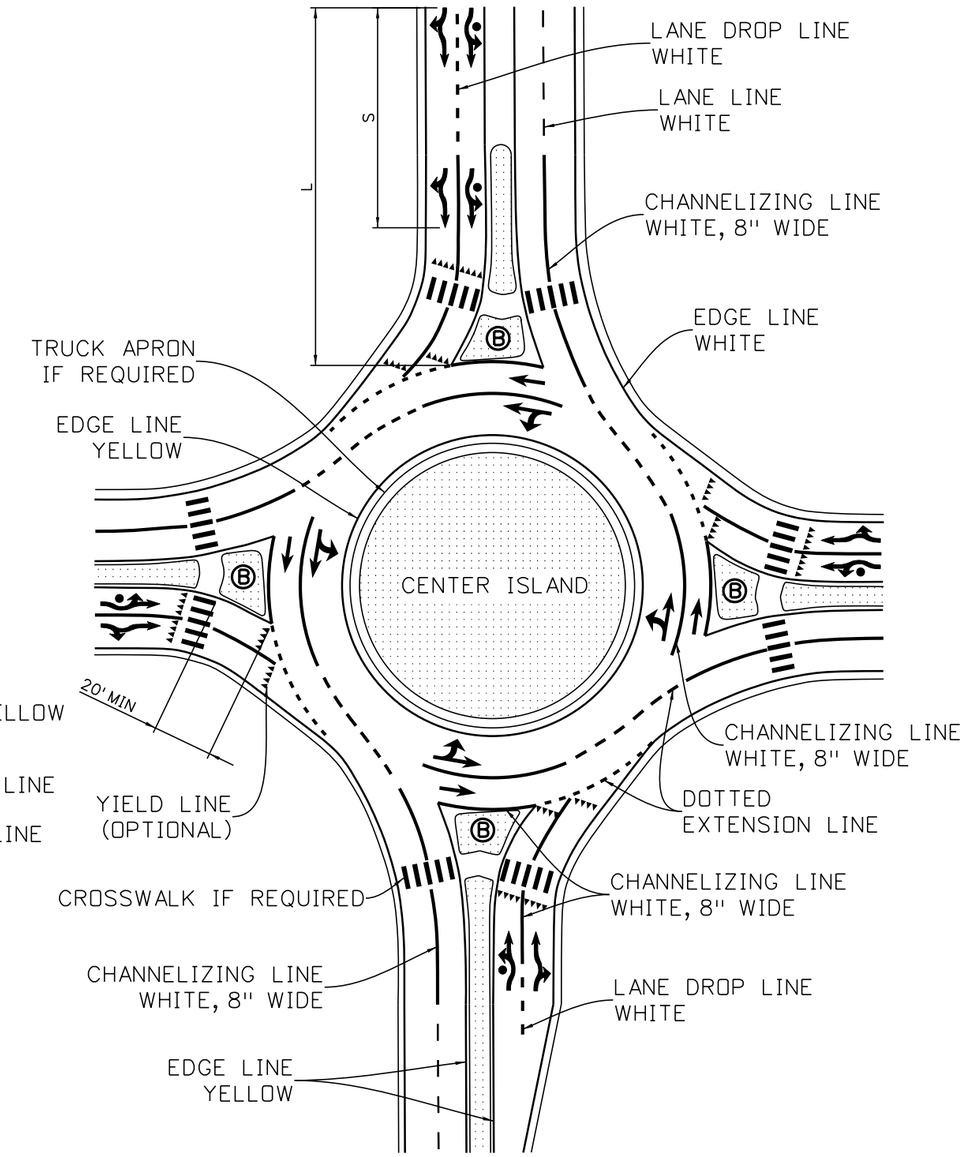

TWO LANE ROUNDABOUT (TYPICAL)

NOTES

1. UNLESS SHOWN IN THIS STANDARD, THE WIDTHS OF PAVEMENT MARKINGS SHALL MATCH THE LARGEST LINE WIDTH OF THE ADJACENT FACILITIES.
2. PAVEMENT MARKING LINES ALONG NON-MOUNTABLE SPLITTER ISLANDS ARE OPTIONAL.
3. NORMAL LANE-USE ARROWS SHALL BE USED IN THE ROUNDABOUT.
4. NORMAL OR FISH-HOOK LANE-USE ARROWS MAY BE USED ON THE APPROACH. ADVANCED SIGNING SHALL MATCH THE PAVEMENT MARKING USED.

   A. WHEN ONE (1) ARROW IS USED ON THE APPROACH, IT SHALL BE PLACED AT THE BEGINNING OF THE CHANNELIZING LINE. OTHERWISE, USE TABLE BELOW.

LENGTH (L)	LEFT AND RIGHT TURN ARROW		NO. OF 'ONLY' PER LANE
	NO. OF ARROWS PER LANE	SPACING (S)	
L < 200'	1	NA	NA
200' - 350'	2	EVENLY SPACED BETWEEN 150'-300'	1
350' - 650'	3		2
650' - 950'	4		3
950' ≤	≥5		≥4

5. THE INSCRIBED OVAL IS OPTIONAL AND MAY BE COMBINED WITH THE LANE-USE ARROW IN THE LEFT-MOST LANE.
6. SEE SHEET 10 FOR LANE-USE ARROW DIMENSIONS.
7. YIELD LINES UTILIZED AT CROSSWALK SHALL BE PLACED 20 TO 50 FEET IN ADVANCED OF THE CROSSWALK.

LEGEND

- Ⓐ SPLITTER ISLAND FORMED BY TWO YELLOW LINES
- Ⓑ RAISED NON-MOUNTABLE SPLITTER ISLAND
- Ⓒ MOUNTABLE SPLITTER ISLAND
- ◆ OPTIONAL

ROUNDABOUT PAVEMENT MARKINGS

Computer File Information		Sheet Revisions	
Creation Date: 04/14/23		Date:	Comments
Created By: AVu	R-1	12/20/24	UPDATE DOTTED EXTENSION LINES
Last Modification Date: 12/20/24			
Last Modified By: NRIVERA			
CAD Ver.: MicroStation V8 Scale: Not to Scale Units: English			

Colorado Department of Transportation
2829 W. Howard Pl.
Denver, CO 80204
Phone: 303-757-9654
FAX: 303-757-9219
Traffic Safety & Engineering EB

PAVEMENT MARKINGS

Issued By: Traffic Safety & Engineering Branch July 31, 2019

STANDARD PLAN NO.
S-627-1
Standard Sheet No. 6 of 11
Project Sheet Number:

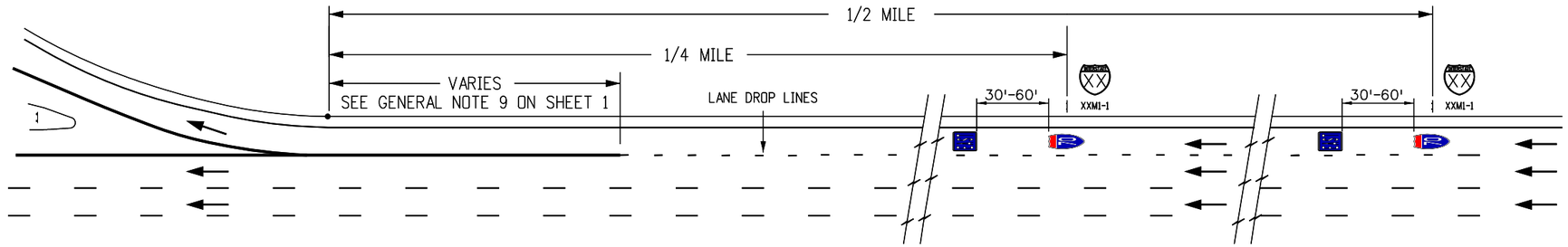

TYPICAL SHIELD PLACEMENT

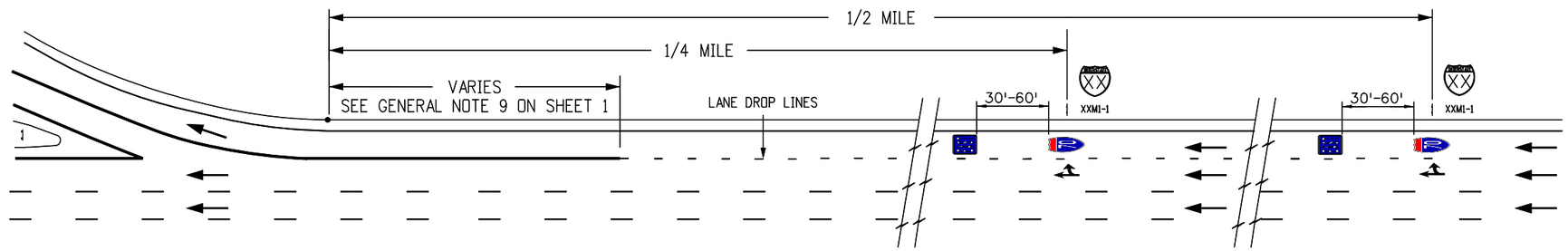

TYPICAL SHIELD & OPTION ARROW PAVEMENT MARKING PLACEMENT

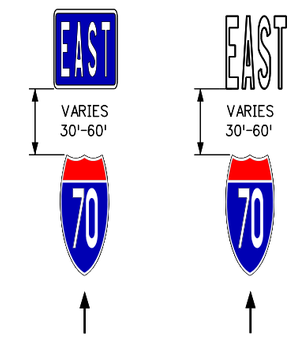

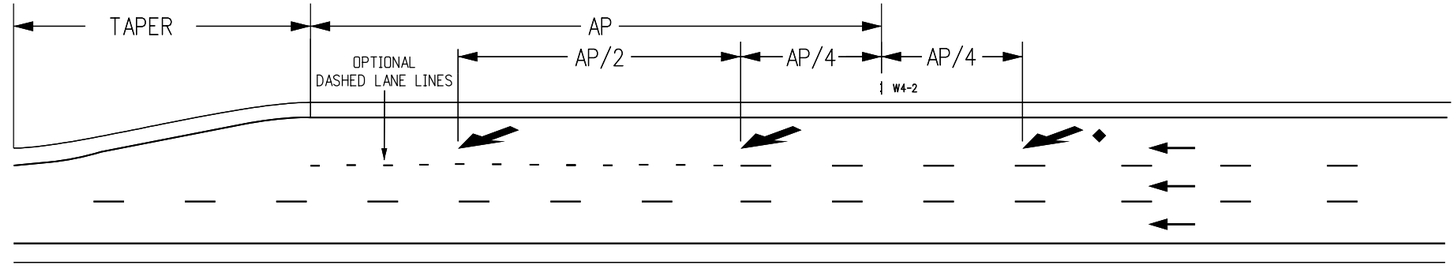

LANE REDUCTION MARKINGS

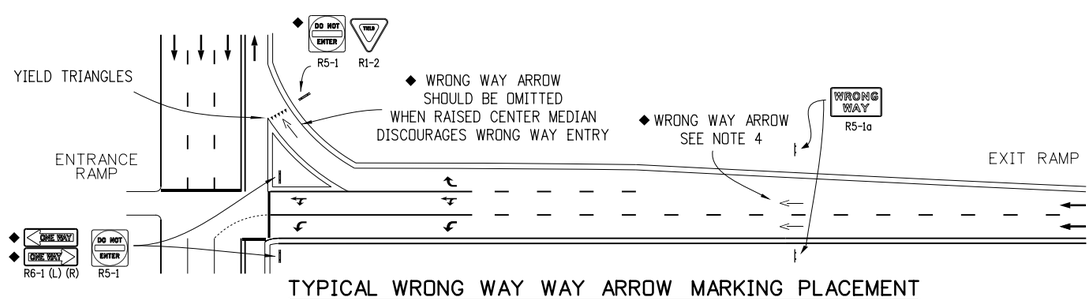

TYPICAL WRONG WAY WAY ARROW MARKING PLACEMENT

NOTES

1. SHIELD AND CARDINAL DIRECTION PAVEMENT MARKINGS ARE OPTIONAL AND SHALL BE INSTALLED AS SHOWN IN THE PLANS.
2. LANE-REDUCTION ARROW MARKINGS ARE NOT REQUIRED FOR ACCELERATION LANES. LANE-REDUCTION ARROW MARKINGS MAY BE INSTALLED IN LONG ACCELERATION LANES AS SHOWN IN THE PLANS OR AS DIRECTED BY THE ENGINEER.
3. LANE-REDUCTION ARROW MARKINGS ARE OPTIONAL FOR SPEEDS LESS THAN 45 MPH.
4. WRONG WAY ARROW MARKINGS MAY BE INSTALLED AS DIRECTED BY THE ENGINEER. IF USED, WRONG WAY ARROW MARKINGS SHALL BE THE LAST ARROW MARKING IN SEQUENCE FROM THE INTERSECTION TO THE BEGINNING OF THE EXIT RAMP.
5. REFER TO SHEET 5 FOR LANE USE ARROW PLACEMENT AT INTERSECTIONS. SEE ARROW DETAILS ON SHEETS 9 AND 10.
6. SEE NOTE 2 "CARDINAL DIRECTIONS" ON SHEET 11

LEGEND

← DIRECTION OF TRAVEL

AP = ADVANCE PLACEMENT DISTANCE FROM THE LANE ENDS SIGN (W4-2) TO THE BEGINNING OF THE MERGING TAPER. SEE SECTION 2C OF THE MUTCD FOR ADVANCE PLACEMENT DISTANCES.

◆ OPTIONAL

TYPICAL ARROW AND SHIELD PAVEMENT MARKINGS

Computer File Information	
Creation Date: 02/08/17	
Created By: MBhat	
Last Modification Date: 12/20/24	
Last Modified By: NRIVERA	
CAD Ver.: MicroStation V8 Scale: Not to Scale Units: English	

	Sheet Revisions	
	Date:	Comments
R-4	12/20/24	ADDED TYPICAL WRONG WAY ARROW DETAIL
R-3	04/30/24	NOTES,LEGEND, AND ALL DETAILS UPDATED
R-2	04/14/23	UPDATED SHEET NUMBER
R-1	07/22/22	Lane Drop to Thru Lane Reduction Markings

Colorado Department of Transportation
2829 W. Howard Pl.
Denver, CO 80204
Phone: 303-757-9654
FAX: 303-757-9219
Traffic Safety & Engineering EB

PAVEMENT MARKINGS

Issued By: Traffic Safety & Engineering Branch July 31, 2019

STANDARD PLAN NO.
S-627-1
Standard Sheet No. 7 of 11
Project Sheet Number:

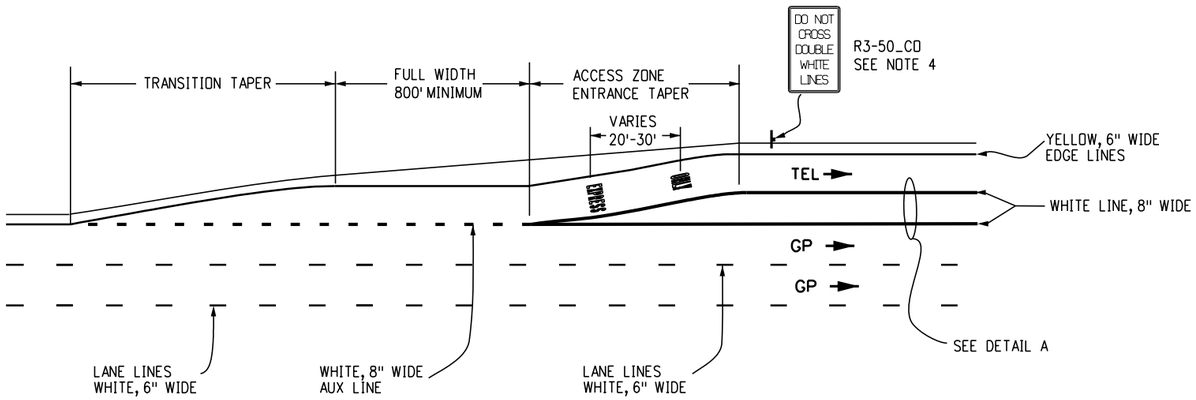

TYPICAL ENTRANCE MARKING FOR BUFFER WIDTH ≥2' AND WHERE BUFFER CROSSING IS PROHIBITED

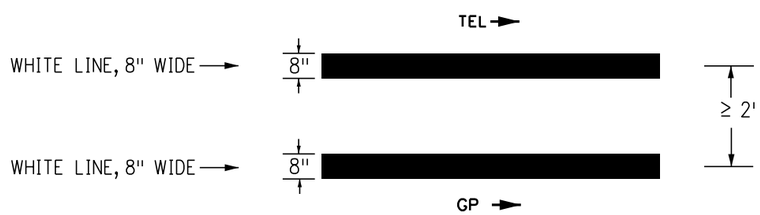

DETAIL A

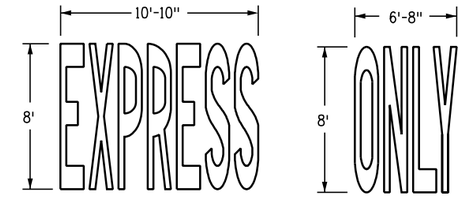

GENERAL NOTES

1. FOR TRANSITION TAPER USE 25:1 RATIO.
2. FOR ACCESS ZONE ENTRANCE TAPER LENGTH USE:

   L = S x W

   L = MINIMUM LENGTH OF TAPER

   S = DESIGN SPEED FOR NEW CONSTRUCTION OR NUMERICAL VALUE OF THE POSTED SPEED LIMIT

   W = WIDTH TRANSITIONED
3. IF BUFFER SPACE IS WIDER THAN 4 FEET, CHEVRON MARKINGS SHOULD BE INSTALLED (SEE MUTCD SECTION 3B.25, 3E.02, AND FIGURE 3E-2(A)).
4. FOR EACH SECTION PROHIBITING ENTERING AND EXITING MOVEMENTS, THE R3-50_CD SIGN SHALL BE INSTALLED WITHIN 300 FEET OF THE START OF THE EXPRESS LANE. ADDITIONAL R3-50_CD SIGNAGE SHALL BE INSTALLED AS SHOWN IN THE PLANS.
5. FOR EACH SECTION PROHIBITING ENTERING AND EXITING MOVEMENTS, AN EXPRESS ONLY MARKING SHOULD BE PLACED WITHIN 50 FEET OF THE START OF THE EXPRESS LANE.
6. EXPRESS ONLY MARKINGS SHOULD SUPPLEMENT THE SIGNS.

LEGEND

TEL - TOLL/EXPRESS LANE

GP - GENERAL PURPOSE LANE

→ - DIRECTION OF TRAVEL

TOLL EXPRESS LANE PAVEMENT MARKINGS

Computer File Information	
Creation Date: 07/31/19	
Created By: EButta	
Last Modification Date: 01/14/26	
Last Modified By: NRIVERA	
CAD Ver.: MicroStation V8 Scale: Not to Scale Units: English	

	Sheet Revisions	
	Date:	Comments
R-4	01/14/26	REVISED NOTE 3
R-3	12/20/24	REVISED LANE LINE TYPES
R-2	04/14/23	ADD LEGEND & UPDATED SHEET NUMBER
R-1	04/17/20	STRIPING LAYOUT & GENERAL NOTE UPDATE

Colorado Department of Transportation
2829 W. Howard Pl.
Denver, CO 80204
Phone: 303-757-9654
FAX: 303-757-9219
Traffic Safety & Engineering EB

PAVEMENT MARKINGS

Issued By: Traffic Safety & Engineering Branch July 31, 2019

STANDARD PLAN NO.
S-627-1
Standard Sheet No. 8 of 11
Project Sheet Number:

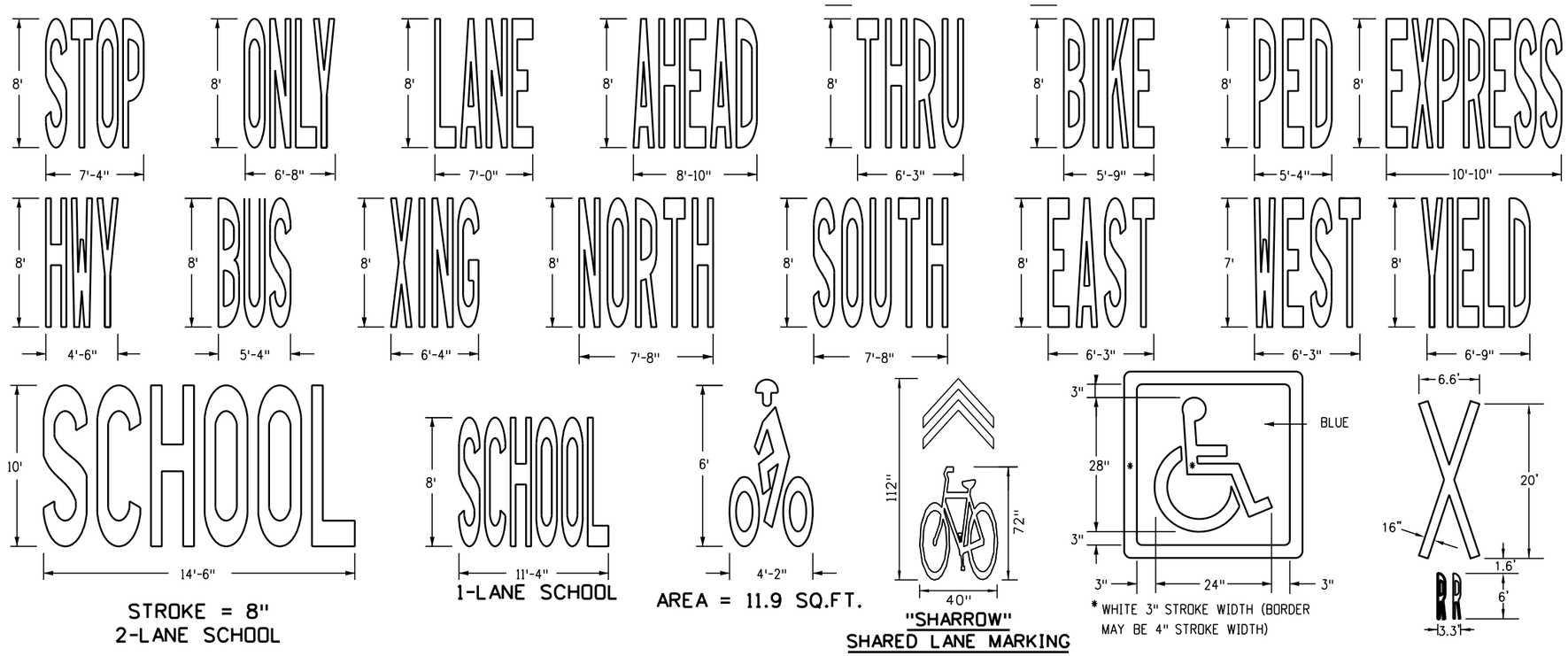

STROKE = 8"
2-LANE SCHOOL

1-LANE SCHOOL

AREA = 11.9 SQ.FT.

"SHARROW"
SHARED LANE MARKING

* WHITE 3" STROKE WIDTH (BORDER MAY BE 4" STROKE WIDTH)

AREA = 10 SQ.FT.

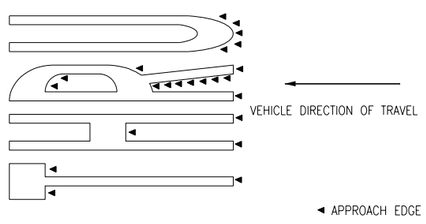

TYPICAL APPROACH EDGE TAPERING VIEW

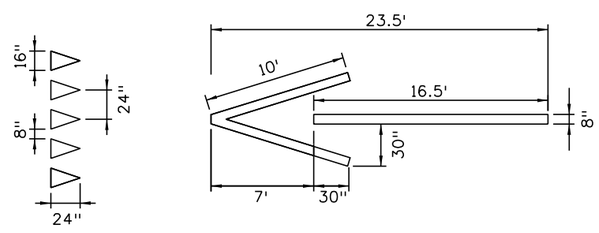

TYPICAL YIELD TRIANGLES AND WRONG WAY ARROW

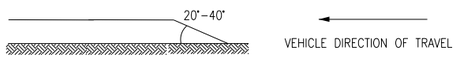

TYPICAL APPROACH EDGE TAPERING PROFILE VIEW

WORD AND SYMBOL NOTES

1. IF HEIGHT IS INCREASED OR DECREASED THEN ALL MEASUREMENTS CHANGE PROPORTIONATELY. EXAMPLE: "H" MEASUREMENT FOR STOP IS REDUCED TO 4 FT. FROM 8 FT. THEN SQUARE FEET 5.75 (1/4 OF 23.0 SQ. FT.).
2. PAVEMENT WORD AND SYMBOL MARKINGS, TRANSVERSE AND LONGITUDINAL (CONTINENTAL) CROSSWALK LINES, AND STOP LINES WILL BE PAID FOR IN SQUARE FEET USING THEIR SPECIFIC BID ITEMS.
3. LETTER SPACING SHALL BE 8 IN. EXCEPT FOR THE LETTER "A" WHICH IS 6 IN..
4. USE THE MARKING WORD "BIKE" IF 6 FT. TO 8 FT. BIKE LANES ARE INSTALLED.

TAPERING NOTES

1. ALL PAVEMENT MARKING APPROACH EDGES FROM THE VEHICLE DIRECTION OF TRAVEL SHALL BE TAPERED USING A PUTTY KNIFE OR SIMILAR TOOL.

DESIGNATED PAYMENT AREAS

FOR THE FOLLOWING H, W, AND S DIMENSIONS PAY:

H = 4' WORDS

BIKE - 5.5 SQ.FT.	LANE - 6.0 SQ.FT.
ONLY - 6.0 SQ.FT.	XING - 5.0 SQ.FT.

H = 8' WORDS

STOP - 23.0 SQ.FT.	XING - 20.0 SQ.FT.
ONLY - 22.5 SQ.FT.	LANE - 22.5 SQ.FT.
AHEAD - 29.0 SQ.FT.	BIKE - 21.0 SQ.FT.
BUS - 18.5 SQ.FT.	HWY - 16.5 SQ.FT.
SCHOOL(1L) - 33.0 SQ.FT.	THRU - 22.0 SQ.FT.
SCHOOL(2L) - 85.0 SQ.FT.	PED - 17.5 SQ.FT.
NORTH - 30.6 SQ.FT.	SOUTH - 28.5 SQ.FT.
EAST - 22.1 SQ.FT.	WEST - 23.7 SQ.FT.
X with RR - 69 SQ.FT.	EXPRESS - 41 SQ.FT.
YIELD - 23 SQ.FT.	

TYPICAL LETTER MEASUREMENTS

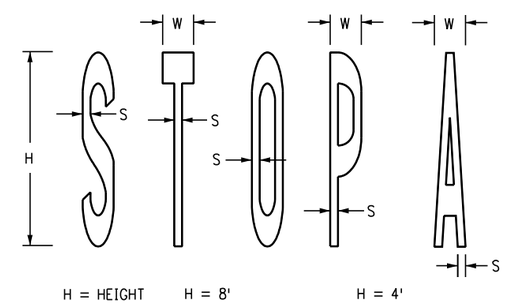

H = HEIGHT	H = 8'	H = 4'
W = WIDTH	W = 1'-3.4" TO 1'-4"	W = XX TO XX

PAVEMENT MARKING WORDS AND SYMBOLS (PAGE 1)

Computer File Information		Sheet Revisions	
Creation Date: 07/04/12		Date:	Comments
Created By: SCL	R-3	01/14/26	ADDED SHARROW SYMBOL
Last Modification Date: 01/14/26	R-2	12/20/24	YIELD TRIANGLES AND WRONG WAY ARROW
Last Modified By: NRIVERA	R-1	04/14/23	MOVED ARROWS DIMENSIONS TO SHEET 10
CAD Ver.: MicroStation V8 Scale: Not to Scale Units: English			UPDATED SHEET NUMBER

Colorado Department of Transportation
2829 W. Howard Pl.
Denver, CO 80204
Phone: 303-757-9654
FAX: 303-757-9219
Traffic Safety & Engineering EB

PAVEMENT MARKINGS

Issued By: Traffic Safety & Engineering Branch July 31, 2019

STANDARD PLAN NO.
S-627-1
Standard Sheet No. 9 of 11
Project Sheet Number:

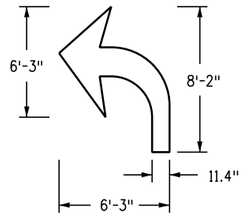

AREA = 16.1 SQ.FT.

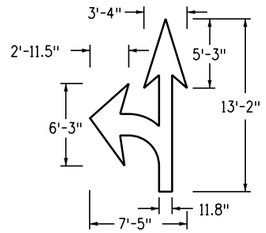

AREA = 27.5 SQ.FT.

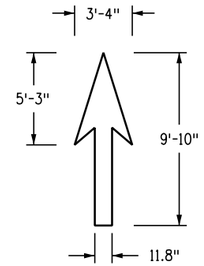

AREA = 12.1 SQ.FT.

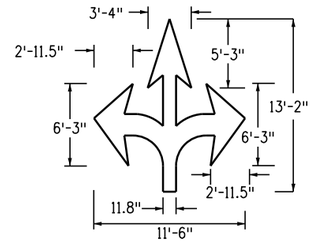

AREA = 39.8 SQ.FT.

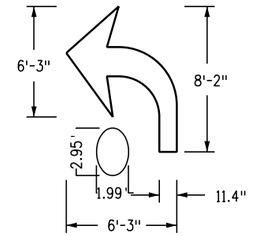

AREA = 20.7 SQ.FT.

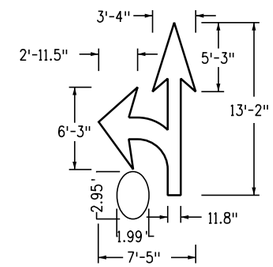

AREA = 32.1 SQ.FT.

WORD AND SYMBOL NOTES

1. IF HEIGHT IS INCREASED OR DECREASED THEN ALL MEASUREMENTS CHANGE PROPORTIONATELY. EXAMPLE: "H" MEASUREMENT FOR STOP IS REDUCED TO 4 FT. FROM 8 FT. THEN SQUARE FEET 5.75 (1/4 OF 23.0 SQ. FT.).
2. PAVEMENT WORD AND SYMBOL MARKINGS, TRANSVERSE AND LONGITUDINAL (CONTINENTAL) CROSSWALK LINES, AND STOP LINES WILL BE PAID FOR IN. SQUARE FEET USING THEIR SPECIFIC BID ITEMS.

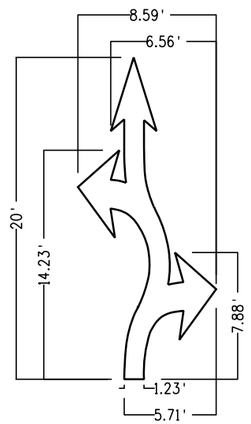

AREA = 41.3 SQ.FT.

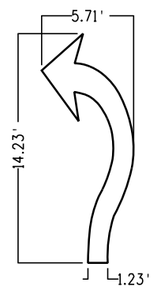

AREA = 23.1 SQ.FT.

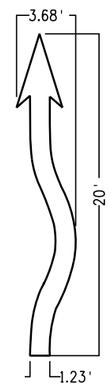

AREA = 26.0 SQ.FT.

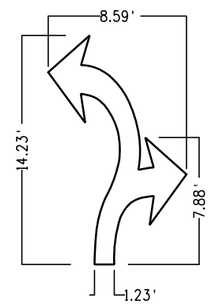

AREA = 30.7 SQ.FT.

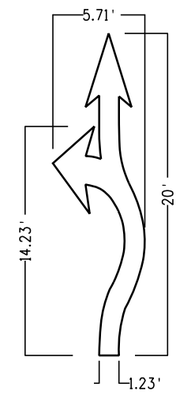

AREA = 33.7 SQ.FT.

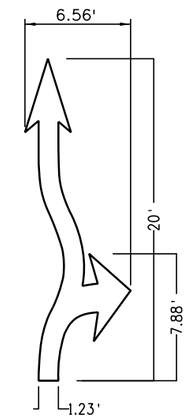

AREA = 33.5 SQ.FT.

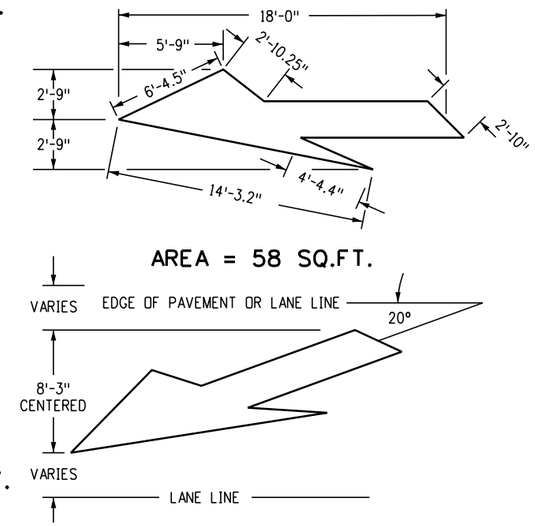

AREA = 58 SQ.FT.

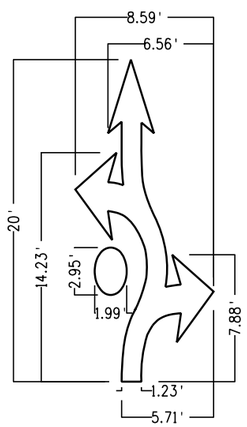

AREA = 45.9 SQ.FT.

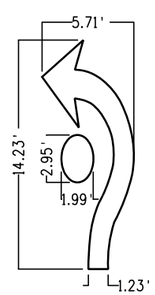

AREA = 27.7 SQ.FT.

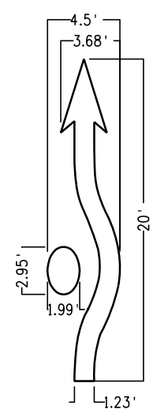

AREA = 30.6 SQ.FT.

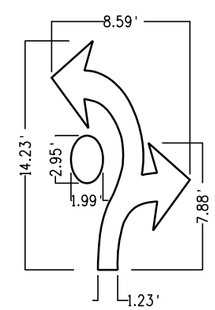

AREA = 35.3 SQ.FT.

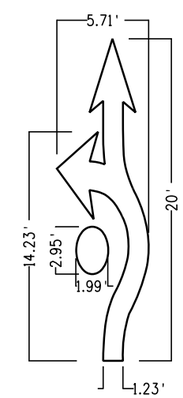

AREA = 38.3 SQ.FT.

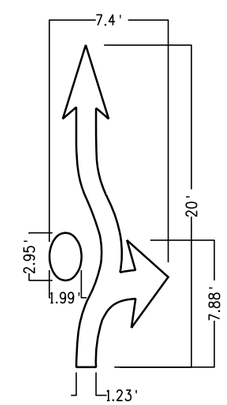

AREA = 38.1 SQ.FT.

PAVEMENT MARKING WORDS AND SYMBOLS (PAGE 2)

Computer File Information		Sheet Revisions	
Creation Date: 04/14/23		Date:	Comments
Created By: AVu	R-1	01/14/26	MOVED LANE REDUCTION ARROW DETAILS TO SHEET 10
Last Modification Date: 01/14/26			
Last Modified By: NRIVERA			
CAD Ver.: MicroStation V8 Scale: Not to Scale Units: English			

Colorado Department of Transportation
2829 W. Howard Pl.
Denver, CO 80204
Phone: 303-757-9654
FAX: 303-757-9219
Traffic Safety & Engineering EB

PAVEMENT MARKINGS

Issued By: Traffic Safety & Engineering Branch July 31, 2019

STANDARD PLAN NO.
S-627-1
Standard Sheet No. 10 of 11
Project Sheet Number:

ELONGATED INTERSTATE ROUTE SHIELDS

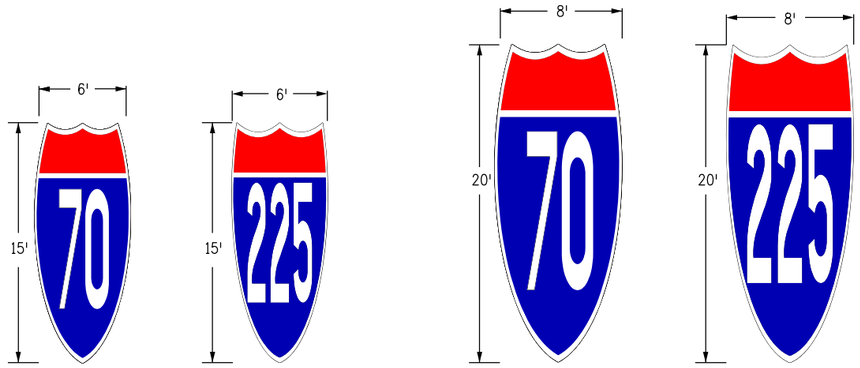

LATE/ZIPPER MERGE

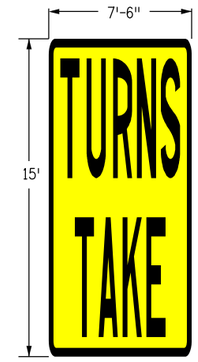

AREA = 112.5 SQ.FT.

DESIGNATED PAYMENT AREAS

FOR THE FOLLOWING ROUTE SHIELDS
& CARDINAL DIRECTIONS DIMENSIONS PAY:

INTERSTATE

6' X 15' - 75 SQ.FT. **8' X 20' - 128 SQ.FT.**

COLORADO STATE

6' X 15' - 90 SQ.FT. 8' X 20' - 160 SQ.FT.

US HIGHWAYS

7' X 16' - 112 SQ.FT. 9' X 21' - 189 SQ.FT.

CARDINAL

8' X 10' - 80 SQ.FT. 9' X 10' - 90 SQ.FT.

NOTES

1. DIMENSIONS

   ELONGATED ROUTE SHIELDS SHALL BE AT LEAST 8'x20' WHEN USED ON HIGH SPEED ROADWAYS (55 MPH OR MORE).

   PER FIGURE 3B-25 OF THE 2009 MUTCD ELONGATED ROUTE SHIELD COLORS SHALL CONFORM WITH THE STANDARD HIGHWAY SIGNS AND MARKINGS BOOK.

2. CARDINAL DIRECTIONS

   USE CARDINAL DIRECTIONS WITH WHITE ON BLUE WHEN USING INTERSTATE ROUTE SHIELDS

   USE CARDINAL DIRECTIONS WITH BLACK ON WHITE WHEN USING EITHER COLORADO STATE OR US HIGHWAY ROUTE SHIELDS.

   CARDINAL DIRECTION MARKING WORD SYMBOL FROM SHEET 9 OF 11 MAY BE USED INSTEAD OF PLAQUE.

ELONGATED COLORADO STATE ROUTE SHIELDS

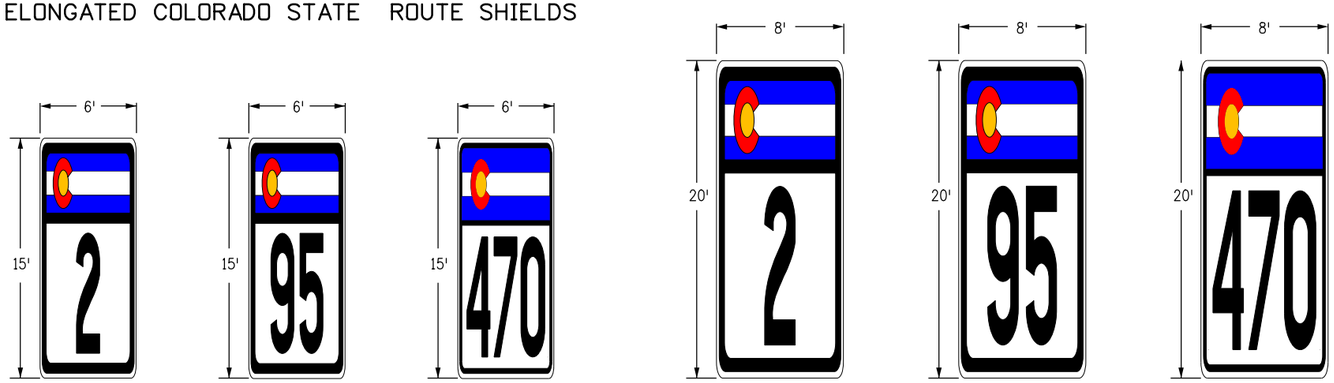

CARDINAL DIRECTIONS
(WHITE LETTERING ON BLUE BACKGROUND)

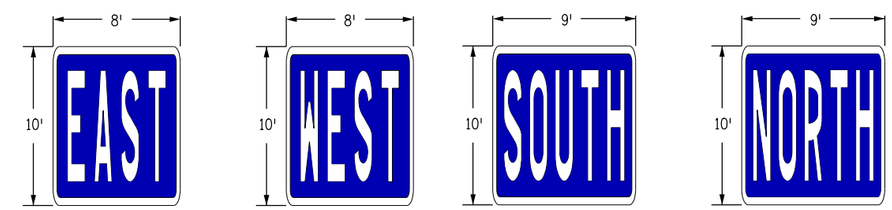

ELONGATED US HIGHWAY ROUTE SHIELDS

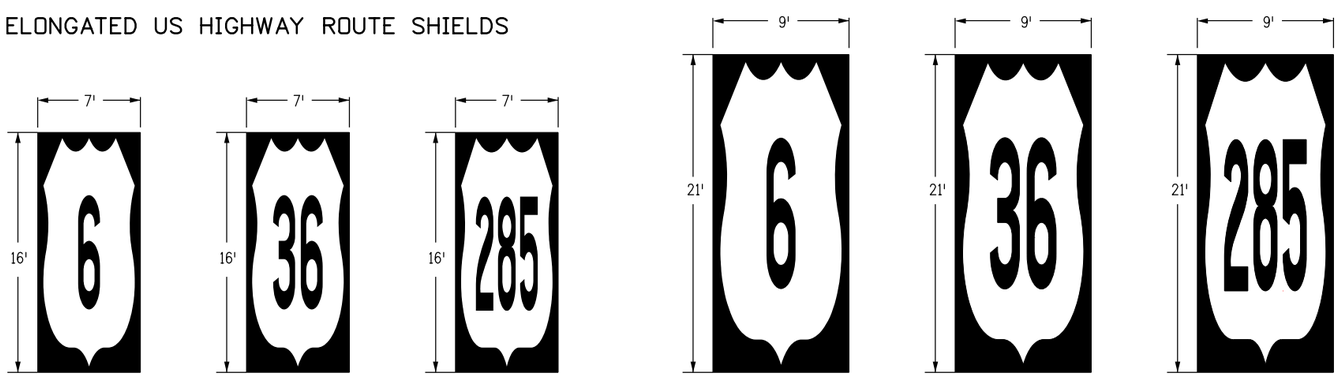

CARDINAL DIRECTIONS
(BLACK LETTERING ON WHITE BACKGROUND WITH BLACK BORDER)

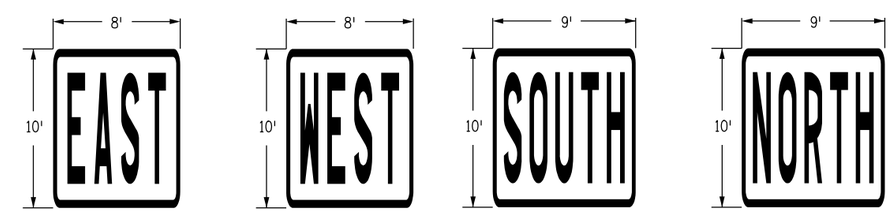

ELONGATED ROUTE SHIELDS & CARDINAL DIRECTION MARKINGS

Computer File Information	
Creation Date: 02/08/17	
Created By: MBhat	
Last Modification Date: 09/22/25	
Last Modified By: IronStride Solutions	
CAD Ver.: MicroStation V8 Scale: Not to Scale Units: English	

	Sheet Revisions	
	Date:	Comments
R-4	09/22/25	ADDED LATE/ZIPPER MERGE DETAIL.
R-3	04/30/24	UPDATED SHEET REFERENCES
R-2	04/14/23	UPDATED SHEET NUMBER
R-1	02/16/21	GENERAL NOTE UPDATE

Colorado Department of Transportation
2829 W. Howard Pl.
Denver, CO 80204
Phone: 303-757-9654
FAX: 303-757-9219
Traffic Safety & Engineering EB

PAVEMENT MARKINGS

Issued By: Traffic Safety & Engineering Branch July 31, 2019

STANDARD PLAN NO.
S-627-1
Standard Sheet No. 11 of 11
Project Sheet Number:

TABLE OF CONTENTS

TYPICAL CASE DESCRIPTION	CASE NO.	SHEET NO.
GENERAL NOTES FOR S-630-1	-	2
CLOSURE OF ONE ROADWAY, 4-LANE HIGHWAY	1	3
CLOSURE OF HALF OF 4-LANE UNDIVIDED HIGHWAY	2	4
ROAD CLOSURE, USE OF ADJACENT SHOULDERS	3	
ROAD CLOSURE, BYPASS DETOUR PROVIDED	4	5
LANE #1 CLOSURE, MULTI-LANE FREEWAY	5	
LANE #2 CLOSURE, MULTI-LANE FREEWAY	6	6
LANE #3 CLOSURE, MULTI-LANE FREEWAY	7	
LANE #4 CLOSURE, MULTI-LANE FREEWAY	8	
CENTER LANE CLOSURE - MULTI-LANE FREEWAY	9	7
ONE LANE CLOSE - 4-LANE DIVIDED HIGHWAY	10	
SHOULDER WORK - FREEWAY/EXPRESSWAY	11	
TRAFFIC CONTROL ON FREEWAY NEAR AN OFF-RAMP	12	8
TRAFFIC CONTROL ON FREEWAY BEFORE AN ON-RAMP	13	
TRAFFIC CONTROL ON FREEWAY ALLOWING ACCESS FROM ON-RAMP	14	
BLASTING ZONE	15	9
RAMP CONSTRUCTION WHERE PARTIAL RAMP IS CLOSED	16	
LANE CLOSURE, 2-LANE HIGHWAY, AT CURVE	17	
TRAFFIC CONTROL AROUND A WORK AREA NEAR AN INTERSECTION, ONE LANE CLOSED	18	10
TRAFFIC CONTROL AROUND A WORK AREA NEAR AN INTERSECTION	19	
TYPICAL SIGNING FOR ROAD CLOSURE	20	
FULL CLOSURE, MULTI-LANE FREEWAY	21	11
CONTINUOUS LANE RAMP CLOSURE, MULTI-LANE FREEWAY	22	
SIMPLE RAMP CLOSURE, MULTI-LANE FREEWAY	23	

TYPICAL CASE DESCRIPTION	CASE NO.	SHEET NO.
"FINES DOUBLE IN WORK ZONE" SIGNING (WITH SPEED REDUCTION)	24	12
SHIFTING OF ONE ROADWAY ON 4-LANE DIVIDED HIGHWAY	25	13
SHOULDER WORK - FREEWAY/EXPRESSWAY w/ 65 MPH SPEED LIMIT	26	14
SHOULDER WORK - FREEWAY/EXPRESSWAY w/ 75 MPH SPEED LIMIT	27	
ROCK SCALING - ROAD CLOSURE, 4-LANE DIVIDED HIGHWAY	28	15
LATE MERGING - ONE LANE CLOSED, 4-LANE DIVIDED HIGHWAY	29	16
ROUNDABOUT - PARTIAL CLOSURE NEAR ONE-LANE ROUNDABOUT	30	17
ROUNDABOUT - INSIDE LANE CLOSURE FOR TWO-LANE ROUNDABOUT	31	18
ROUNDABOUT - OUTSIDE LANE CLOSURE FOR TWO-LANE ROUNDABOUT	32	19
ROUNDABOUT - PARTIAL CLOSURE FOR ONE-LANE ROUNDABOUT	33	20
MOBILE PAVEMENT MARKING ZONE, MOBILE SHOULDER CLOSURE ON 2-LANE UNDIVIDED HIGHWAY	34	21
MOBILE PAVEMENT MARKING ZONE, CENTERLINE STRIPING ON 2-LANE UNDIVIDED HIGHWAY	35	
MOBILE PAVEMENT MARKING ZONE, LANE LINE STRIPING OPERATIONS ON MULTI-LANE DIVIDED HIGHWAY	36	22
MOBILE PAVEMENT MARKING ZONE, MOBILE RAMP WORK ZONE - EXPRESSWAY/FREEWAY	37	
MOBILE STRIPING OPERATION OF LANE CLOSURE OF MULTI-LANE HIGHWAY (NOT FOR USE ON FREEWAYS)	38	23
MOBILE OPERATION OF LANE CLOSURE OF MULTI-LANE HIGHWAY	39	
MOBILE SWEEPING OPERATION 1 MILE OR LESS	40	24
CHIP SEALS - 2-LANE UNDIVIDED HIGHWAY	41	25
PILOT CAR - LANE CLOSURE, 2-LANE UNDIVIDED HIGHWAY	42	
TYPICAL CONSTRUCTION ZONE SIGNS AND ADVANCE WARNING SIGN PLACEMENT	-	26

GENERAL NOTES

1. ALL CONSTRUCTION ZONE TRAFFIC CONTROL DEVICES, INCLUDING BUT NOT LIMITED TO BARRICADES, SIGNS, ARROW PANELS, FLASHING BEACON (PORTABLE), AND CHANNELIZING DEVICES, SHALL BE FURNISHED, INSTALLED, MAINTAINED (INCLUDING WASHING), REPLACED IF DAMAGED, REMOVED WHEN TEMPORARILY NOT IN USE AND RETURNED WHEN REQUIRED, RESET AS NECESSARY DURING THE PROGRESS OF CONSTRUCTION, AND REMOVED ENTIRELY WHEN THE PROJECT IS COMPLETED. ALL DEVICES SHALL MEET THE REQUIREMENTS OF THE LATEST EDITION OF THE ATSSA "QUALITY GUIDELINES FOR TEMPORARY TRAFFIC CONTROL DEVICES & FEATURES".

2. WORK ON THE PROJECT SHALL NOT BE STARTED UNTIL ALL REQUIRED TRAFFIC CONTROL DEVICES ARE IN PLACE, AND APPROVED BY THE ENGINEER.

3. WHEN SPEED LIMIT REDUCTION IS REQUIRED, SUCH REDUCTION SHALL BE IN ACCORDANCE WITH CDOT FORM 568, "CDOT TEMPORARY SPEED LIMIT REDUCTION."

   WHEN A CHANGE IN AN EXISTING SPEED LIMIT IS REQUIRED, THE R2-1 SIGNS, SHOWN ON THE SCHEDULE OF CONSTRUCTION TRAFFIC CONTROL DEVICES, SHOULD BE INSTALLED AT THE LOCATIONS SHOWN ON THE TYPICAL CASES BY R2-1 (OPTIONAL) SIGNS.

   AN ADVISORY SPEED PLATE (W13-1P) MAY BE USED WITH A WARNING SIGN WHEN THE MAXIMUM RECOMMENDED SPEED FOR CONDITION NAMED IS LOWER THAN THE POSTED SPEED LIMIT.

   THE REGULATORY OR ADVISORY SPEED REDUCTION DISPLAYED SHALL NOT EXCEED 15 MPH PER SIGN INSTALLATION.

4. WORK ZONE (G20-5P) AND FINES DOUBLE (R2-6P) SIGNS SHALL BE PROVIDED EVERY 2640' BETWEEN R2-10 AND R2-11 SIGNS. THE SPACING OF THESE SIGNS MAY BE CHANGED AS DIRECTED BY THE ENGINEER.

5. ANY TRAFFIC CONTROL DEVICE THAT IS DAMAGED, WEATHERED, WORN, OR OTHERWISE DEEMED UNACCEPTABLE BY THE ENGINEER, SHALL BE REPLACED.

6. CONTRACTOR AND PERSONAL VEHICLE PARKING IS PROHIBITED WITHIN THE RIGHT-OF-WAY UNLESS DESIGNATED ON THE PLANS, OR APPROVED BY THE ENGINEER.

7. CONSTRUCTION TRAFFIC SIGNS SHALL BE MEASURED BY THE FOLLOWING SIZES AND DESCRIPTIONS:

PANEL SIZE A	0.01 TO 9.00 SQ. FT. (INCLUDING TYPE 1 AND TYPE 2 BARRICADES).
PANEL SIZE B	9.01 TO 16.00 SQ. FT.
PANEL SIZE C	GREATER THAN 16 SQ. FT.

   CONSTRUCTION TRAFFIC SIGN (SPECIAL), SQ. FT., MAY BE USED FOR SOME PROJECT SPECIFIC INFORMATION SIGNS.

   FOR DETAILED DIMENSIONS OF SIGNS WITH SIGN CODE NUMBERS, SEE "STANDARD HIGHWAY SIGNS" AND THE "COLORADO SUPPLEMENT" THERETO. SIGN LAYOUTS FOR OTHER SIGNS WILL BE FURNISHED IN THE PLANS, TRANSMITTED TO THE ENGINEER AFTER AWARD, OR MAY BE AVAILABLE UPON REQUEST.

   W20-5 WARNING SIGNS SHALL BE FURNISHED WITH EXCHANGEABLE PLAQUES READING "RIGHT", "LEFT", "CENTER", "RIGHT 2", ETC. AT NO ADDITIONAL COST.

8. ALL WARNING AND REGULATORY SIGNS SHALL BE POSTED ON BOTH SIDES OF THE ROADWAY ON DIVIDED HIGHWAYS, MULTI-LANE RAMPS, ONE-WAY STREETS, AND AS DIRECTED BY THE ENGINEER, EXCEPT WHERE ONLY ONE SHOULDER IS CLOSED (EX: CASE 11 ON SHEET 7).

9. ADDITIONAL TRAFFIC CONTROL DEVICES ADDRESSING FLAGGING, SPEED REDUCTION, ETC. WILL BE NECESSARY FOR SET-UP AND TAKE-DOWN OF MOST CASE APPLICATIONS; DAILY WORK SITE ACCESS; AND PAVEMENT MARKING REMOVAL AND INSTALLATION OPERATIONS.

10. BASED ON SIGHT DISTANCE AND OTHER CONSIDERATIONS, THE FINAL LOCATIONS OF SIGNS ARE SUBJECT TO APPROVAL OF THE ENGINEER.

11. IF CONSTRUCTION RELATED TRAFFIC CONGESTION BACKS UP BEYOND THE INSTALLED ADVANCE SIGN SEQUENCE, ADDITIONAL ADVANCE SIGNING SHALL BE PLACED BEYOND THE CONGESTION.

12. ALL SIGN MATERIAL SHALL BE SOUND AND DURABLE TO THE DEGREE NECESSARY FOR MAINTAINING EFFECTIVE AND NEAT APPEARING TRAFFIC CONTROLS, AND:

    a. SIGN PANELS MAY BE FABRICATED FROM PLYWOOD, STEEL, ALUMINUM, OR OTHER SUITABLE MATERIAL.
    b. REFLECTIVE SHEETING SHALL CONFORM TO ASTM D4956. THE TYPE SHALL BE AS DESCRIBED IN THE STANDARD SPECIFICATIONS AND/OR AS SHOWN ON THE PLANS.
    c. SYMBOLS AND LEGEND SHALL BE OF GOOD WORKMANSHIP (UNEVEN OR HAND LETTERING WILL NOT BE ACCEPTED).
    d. PORTABLE OR TEMPORARY MOUNTING SHALL NOT BE CONSTRUCTED OR WEIGHTED BY ANY METHOD OR MATERIAL THAT MAKES THEM HAZARDOUS TO TRAFFIC.
    e. CERTAIN POST SIZES AND SHAPES REQUIRE A "BREAK-AWAY" DEVICE. SEE THE APPLICABLE STANDARD PLAN. OTHER POST DESIGNS OR SYSTEMS REQUIRE THE SUBMITTAL OF AN FHWA LETTER OF ACCEPTANCE TO THE ENGINEER, AND MUST BE APPROVED BY THE ENGINEER PRIOR TO THEIR USE.

13. ALL CONSTRUCTION SIGN PLACEMENT SHALL BE IN ACCORDANCE WITH STANDARD PLAN "TYPICAL GROUND SIGN PLACEMENT" UNLESS OTHERWISE APPROVED.

    SIGNS APPROVED TO BE MOUNTED ON PORTABLE SUPPORTS, OR APPROPRIATE SIGNS MOUNTED ON BARRICADES, MAY BE AT LOWER HEIGHTS, BUT THE BOTTOM OF THE SIGNS SHALL NOT BE LESS THAN ONE FOOT ABOVE THE PAVEMENT ELEVATION.

14. SIGNS MOUNTED ON THE MEDIAN OF DIVIDED HIGHWAYS WHERE MEDIAN BARRIER IS IN PLACE MAY BE MOUNTED ON THE BARRIER WITH A SADDLE TYPE BRACKET. IF THE BRACKET ALLOWS THE SIGN PANEL TO BE TURNED PARALLEL TO THE ROADWAY, THE SIGN MAY REMAIN IN PLACE WHEN NOT APPLICABLE, BUT LAYING THE SIGN PANEL DOWN IN A HORIZONTAL POSITION IS NOT PERMITTED.

15. TRAFFIC CONES SHALL BE AT LEAST 28 INCHES IN HEIGHT. HOWEVER, THE MINIMUM SIZE SHALL BE 36 INCHES WHEN THEY ARE USED ON FREEWAYS AND EXPRESSWAYS, OR DURING NIGHT TIME WORKING HOURS. THEY SHOULD ALSO BE 36 INCHES WHEN USED ON OTHER HIGH SPEED ROADWAYS (45 MPH OR MORE) WITH AN ADT OF 6,000 OR MORE.

16. TYPE 1 BARRICADES SHALL NOT BE USED ON FREEWAYS, EXPRESSWAYS, OR OTHER HIGH SPEED ROADWAYS (55 MPH OR MORE).

17. WHEN TWO-WAY TRAFFIC IS PLACED ON ONE ROADWAY OF A NORMALLY DIVIDED HIGHWAY, OPPOSING TRAFFIC SHALL BE SEPARATED EITHER WITH CONCRETE BARRIER (TEMPORARY), OR WITH CHANNELIZING DEVICES APPROVED FOR THIS APPLICATION, THROUGHOUT THE LENGTH OF TWO-WAY OPERATION. THE TRANSITION ZONES SHALL HAVE CONCRETE BARRIER (TEMPORARY). THE BARRIER SHALL BE TIED TO AN EXISTING STRUCTURE OR GUARD RAIL, FLARED OR EXTENDED, TO MEET CLEAR ZONE REQUIREMENTS, OR FITTED WITH AN IMPACT ATTENUATION DEVICE.

18. CHANNELIZING DEVICE SPACING, IN FEET, SHALL BE AS FOLLOWS:
    a. FOR TAPERS AND TRANSITIONS, SPACING EQUALS THE NUMERICAL VALUE OF THE SPEED LIMIT. (e.g. 45 MPH = 45 FEET)

    b. FOR TANGENTS ALONG THE BUFFER SPACE OR WORK AREA, SPACING MAY NOT BE GREATER THAN TWO TIMES THE SPEED LIMIT. (e.g. 50 MPH = 50 FEET TO 100 FEET MAXIMUM)

19. FOR DETAILS ON BARRICADES, CONCRETE BARRIER (TEMPORARY), VERTICAL PANELS, AND FLASHING BEACON (PORTABLE), SEE THE APPLICABLE STANDARD PLANS.

20. FLAGGER STATION SHALL COMPRISE OF EITHER A FLAGGER OR AN AUTOMATED FLAGGER ASSISTANCE DEVICE (AFAD). SEE THE MOST RECENT CDOT STANDARD SPECIFICATION FOR ROAD AND BRIDGE CONSTRUCTION FOR ADDITIONAL GUIDANCE REGARDING AFAD.

21. FLAGGING OPERATIONS SHALL NOT OVERRIDE VISIBLE REGULATORY SIGNING OR TRAFFIC SIGNALS, EVEN WHEN TRAFFIC SIGNALS HAVE BEEN DISABLED OR SET TO FLASH MODE. ONLY A UNIFORMED POLICE OFFICER MAY DIRECT TRAFFIC IN A SIGNALIZED INTERSECTION. FLAGGING IS NOT PERMITTED ON INTERSTATES UNLESS APPROVED BY THE REGION TRAFFIC ENGINEER.

22. FLOOD LIGHTS SHALL BE USED TO ILLUMINATE FLAGGER STATIONS DURING THE HOURS OF DARKNESS UNLESS OTHERWISE APPROVED. A TYPICAL LIGHT SHOULD PROVIDE THE FOLLOWING: A FULLY DIRECTIONAL SWIVEL MOUNT QUARTZ LIGHT SOURCE (500 WATT MINIMUM), SELF-SUPPORTING STAND WITH VARIABLE LIGHT HEIGHT FROM A MINIMUM OF EIGHT FEET ABOVE THE ROADWAY, AND A POWER SOURCE. IT SHALL ILLUMINATE THE STATION AREA AND A FLAGGER ESCAPE PATH, BUT SHALL NOT PRESENT ANY GLARE TO TRAFFIC.

23. FOR TEMPORARY PAVEMENT MARKINGS AND CONTROL POINTS FOR INSTALLING THOSE PAVEMENT MARKINGS FOR UNDIVIDED ROADWAYS THAT ARE BEING CONSTRUCTED UNDER TRAFFIC, FULL COMPLIANCE CENTER LINE, LANE LINE, AND EDGE LINE TEMPORARY MARKINGS SHALL BE IN PLACE AT THE END OF EACH WORK DAY IN ACCORDANCE WITH THE MOST RECENT CDOT STANDARD SPECIFICATIONS FOR ROAD AND BRIDGE CONSTRUCTION.

    FOR ADDITIONAL PAVEMENT MARKING DETAILS, SEE STANDARD PLAN S-627-1 "PAVEMENT MARKINGS".

24. BUFFER SPACE IS OPTIONAL. NEED MUST BE DETERMINED ON A PROJECT OR SITE SPECIFIC BASIS AS DIRECTED BY THE ENGINEER. WHEN A BUFFER SPACE IS USED, DIMENSIONS AND/OR DEVICES USED ARE TO BE INCORPORATED IN THE TRAFFIC CONTROL PLAN (TCP) OR THE CONTRACTOR'S METHOD OF HANDLING TRAFFIC (MHT).

25. ADDITIONAL VMS SIGNAGE SHOULD BE CONSIDERED AT LEAST A MILE IN ADVANCE OF THE SIGNING SHOWN IN THE DETAIL FOR ANY LANE CLOSURES ON INTERSTATE AND OTHER HIGH SPEED FACILITIES ESPECIALLY WHEN THE LEVEL OF SERVICE IS SIGNIFICANTLY REDUCED AS A RESULT OF CONSTRUCTION. THE LEGENDS SHOULD BE CHANGED TO ADVISE MOTORISTS OF UPCOMING TRAFFIC CONDITIONS AND TO ALERT THEM OF UPCOMING LANE USAGE.

    ADDITIONAL ADVANCE WARNING SIGNAGE IS ENCOURAGED IN ALL CASES WHERE TRAFFIC VOLUMES AND SPEEDS ARE HIGH AND/OR WHERE THERE ARE INFREQUENT EXITS. ADDITIONAL SIGNAGE IS ALSO ENCOURAGED IN LOCATIONS WHERE DRIVERS' LINE OF SIGHT TO ADVANCE WARNING SIGNS IS OBSTRUCTED.

26. WHEN ARROW BOARDS ARE USED TO CLOSE MULTIPLE LANES, A SEPARATE ARROW BOARD SHALL BE USED FOR EACH CLOSED LANE.

    IF ARROW BOARDS ARE USED FOR SHOULDER WORK, BLOCKING THE SHOULDER, FOR ROADSIDE WORK NEAR THE SHOULDER, OR FOR TEMPORARILY CLOSING ONE LANE ON A TWO-LANE, TWO-WAY ROADWAY, USE THE ARROW BOARDS ONLY IN THE CAUTION MODE.

27. RAISED PAVEMENT MARKERS MAY BE USED TO SUPPLEMENT TEMPORARY STRIPING DURING NON-SNOW PERIODS. THEIR USE IS ENCOURAGED ON HIGHER SPEED FACILITIES WHEN TRAFFIC IS BEING DIVERTED FROM ITS USUAL COURSE.

28. THE TYPICAL CASES DEPICTED IN THIS STANDARD REFLECT THE MINIMUM REQUIREMENTS, UNLESS AS OTHERWISE DIRECTED BY THE PROJECT PLANS AND SPECIFICATIONS, AND/OR THE PROJECT ENGINEER.

29. A SIGNIFICANT PROJECT IS DEFINED AS ONE THAT, ALONE OR IN COMBINATION WITH OTHER CONCURRENT PROJECTS NEARBY, IS ANTICIPATED TO CAUSE SUSTAINED WORK ZONE IMPACTS AT A LOCATION FOR THREE OR MORE CONSECUTIVE DAYS WITH EITHER INTERMITTENT OR CONTINUOUS LANE CLOSURES.

30. PROJECT INFORMATION SIGNAGE MAY BE INSTALLED IF SPECIFIED IN PROJECT SPECIAL PROVISION 626 - PUBLIC INFORMATION SERVICES.

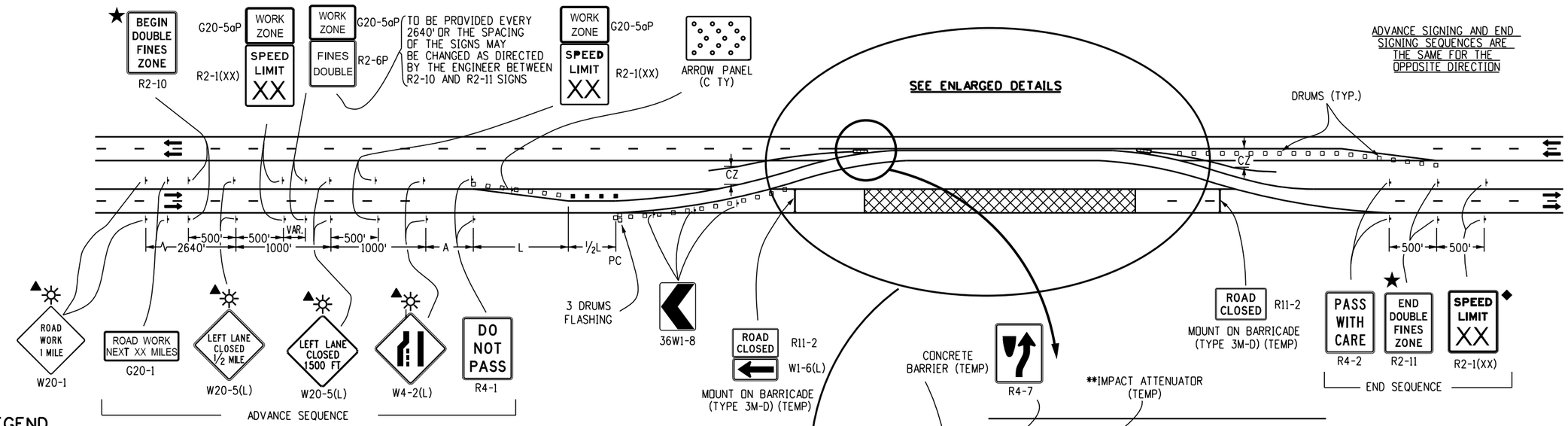

TYPICAL 2-WAY ZONE STRIPING

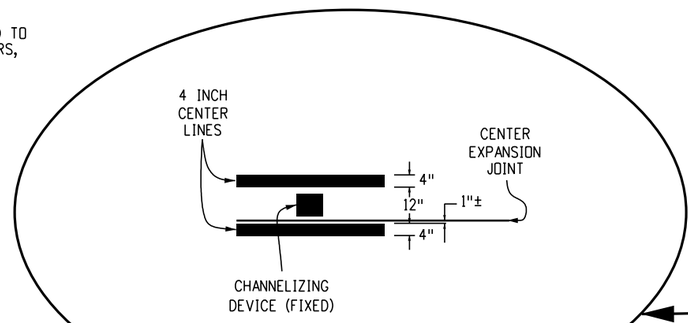

TYPICAL 2-WAY ZONE STRIPING

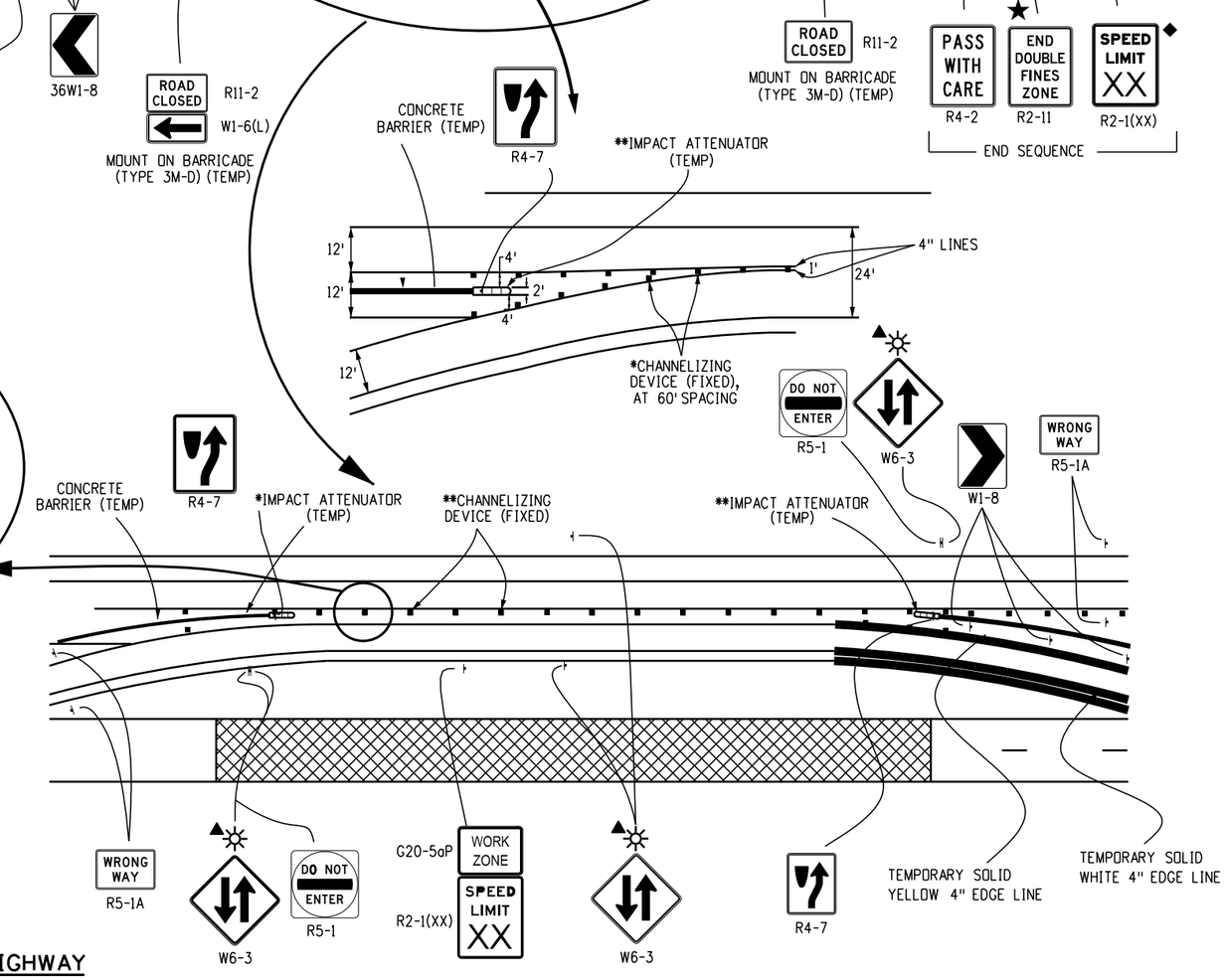

LEGEND

- ▪ CHANNELIZING DEVICE: FOR TYPE OF DEVICE TO BE USED, SEE SCHEDULE OF TRAFFIC CONTROL DEVICES INCLUDED IN THE PLANS.
- ▫ DRUMS OR VERTICAL PANELS SHALL BE USED TO DELINEATE MERGING TAPERS, SHIFTING TAPERS, AND ONE LANE, TWO-WAY TRAFFIC TAPERS.
- TYPE III BARRICADE
- CONCRETE BARRIER (TEMPORARY)
- FLAGGER STATION
- DIRECTION OF TRAVEL
- WORK AREA
- L TRANSITION TAPER LENGTH:
  - L = MINIMUM LENGTH OF TAPER
  - SPEED 45 MPH OR MORE: $L = S \times W$
  - SPEED 40 MPH OR LESS: $L = \frac{WS^2}{60}$
  - S = NUMERICAL VALUE OF SPEED LIMIT OR 85 PERCENTILE SPEED
  - W = WIDTH OF OFFSET
- ADVANCE WARNING FLASHING OR SEQUENCING ARROW PANEL
- A = 100' (URBAN LOW SPEED)
  - 350' (URBAN HIGH SPEED)
  - 500' (RURAL)
  - 1,000' (EXPRESSWAY / FREEWAY)
- CZ CLEAR ZONE (SEE GENERAL NOTE 17 ON SHEET 2).
- ▲ THESE DEVICES ARE OPTIONAL. THEIR NEED SHALL BE DETERMINED BY DETOUR DESIGN AND/OR SCOPE OF CONSTRUCTION ACTIVITY, AND ARE REQUIRED WHEN THEY ARE INCLUDED IN THE SCHEDULE OF CONSTRUCTION CONTROL DEVICES.
- VAR. BUFFER SPACE (SEE GENERAL NOTE 23 ON SHEET 2).
- IMPACT ATTENUATOR AS DETAILED ON THE PLANS
- FLASHING BEACON

- ◆ THESE DEVICES ARE NOT OPTIONAL IF THE POSTED SPEED LIMIT IN THE WORK ZONE IS REDUCED.
- * THESE ITEMS ARE NOT REQUIRED WHEN CONTINUOUS CONCRETE BARRIER IS USED FOR CHANNELIZATION.
- ** SEE GENERAL NOTE 17 ON SHEET 2.
- ★ SEE FINES DOUBLE SIGNING NOTES ON SHEET 12.

CASE NO. 1
TYPICAL APPLICATION
CLOSURE OF ONE ROADWAY 4-LANE DIVIDED HIGHWAY

Computer File Information	
Creation Date: 07/04/12	
Created By: Roybal	R-2
Last Modification Date: 01/14/26	R-1
Last Modified By: NRIVERA	
CAD Ver.: MicroStation V8 Scale: Not to Scale Units: English	

Sheet Revisions	
Date:	Comments
01/14/26	REMOVED G20-11
01/20/23	Replaced R52-a(b) with R2-10(11) Updated G20-11 Added Drum/Vertical Panel Symbol

Colorado Department of Transportation
2829 W. Howard Pl.
Denver, CO 80204
Phone: 303-757-9654
FAX: 303-757-9219
Traffic Safety & Engineering EB

TRAFFIC CONTROLS FOR HIGHWAY CONSTRUCTION

Issued By: Traffic Safety & Engineering Branch July 31, 2019

STANDARD PLAN NO.
S-630-1
Standard Sheet No. 3 of 26
Project Sheet Number:

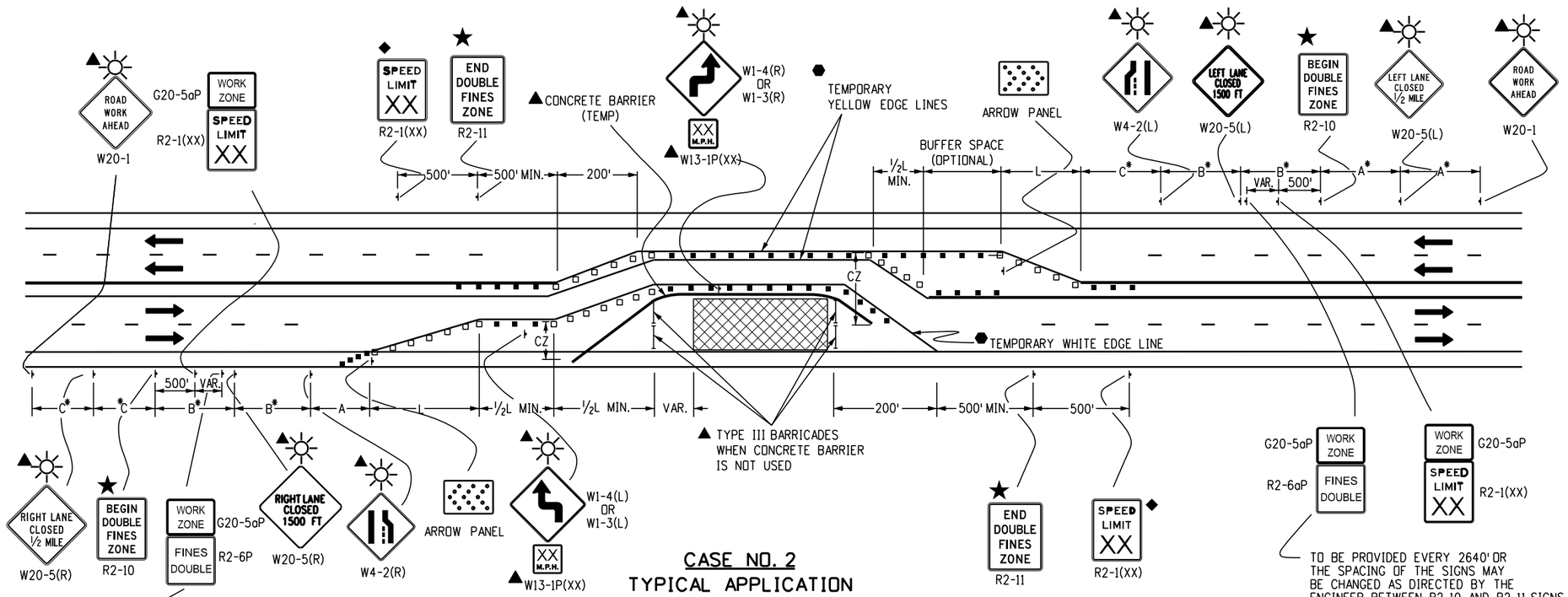

CASE NO. 2
TYPICAL APPLICATION
CLOSURE OF HALF OF 4-LANE UNDIVIDED HIGHWAY

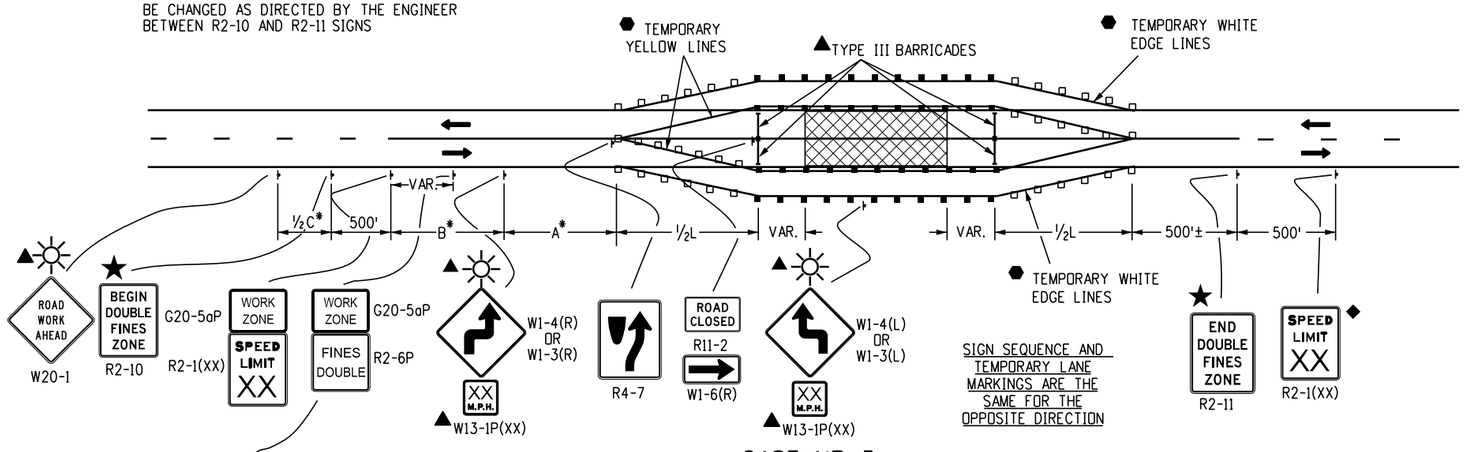

SIGN SEQUENCE AND TEMPORARY LANE MARKINGS ARE THE SAME FOR THE OPPOSITE DIRECTION

CASE NO. 3
TYPICAL APPLICATION
ROAD CLOSURE, USE OF ADJACENT SHOULDERS

LEGEND

- ■ CHANNELIZING DEVICE: FOR TYPE OF DEVICE TO BE USED, SEE SCHEDULE OF TRAFFIC CONTROL DEVICES INCLUDED IN THE PLANS.
- □ DRUMS OR VERTICAL PANELS SHALL BE USED TO DELINEATE MERGING TAPERS, SHIFTING TAPERS, AND ONE WAY, TWO-WAY TRAFFIC TAPERS.
- TYPE III BARRICADE
- FLAGGER STATION
- DIRECTION OF TRAVEL
- WORK AREA
- L TRANSITION TAPER LENGTH:
  - L = MINIMUM LENGTH OF TAPER
  - SPEED 45 MPH OR MORE: $L = S \times W$
  - SPEED 40 MPH OR LESS: $L = \frac{WS^2}{60}$
  - S = NUMERICAL VALUE OF SPEED LIMIT OR 85 PERCENTILE SPEED
  - W = WIDTH OF OFFSET
  - SHOULDER TAPER = 1/3 L
- ADVANCE WARNING FLASHING OR SEQUENCING ARROW PANEL.
- A = 100' (URBAN LOW SPEED)
  350' (URBAN HIGH SPEED)
  500' (RURAL)
  1,000' (EXPRESSWAY / FREEWAY)
- CZ CLEAR ZONE (SEE GENERAL NOTE 17 ON SHEET 2).
- ▲ THESE DEVICES ARE OPTIONAL. THEIR NEED SHALL BE DETERMINED BY DETOUR DESIGN AND/OR SCOPE OF CONSTRUCTION ACTIVITY, AND ARE REQUIRED WHEN THEY ARE INCLUDED IN THE SCHEDULE OF CONSTRUCTION CONTROL DEVICES.
- ◆ THESE DEVICES ARE NOT OPTIONAL IF THE POSTED SPEED LIMIT IN THE WORK ZONE IS REDUCED.
- VAR. BUFFER SPACE (SEE GENERAL NOTE 23 ON SHEET 2).
- ⬢ REQUIRED WHEN WORK OCCUPIES THE LOCATION FOR MORE THAN 3 DAYS.
- FLASHING BEACON
- ★ SEE FINES DOUBLE SIGNING NOTES ON SHEET 12.

* KEY TO ADVANCE SIGNING DISTANCES

ROAD TYPE	DISTANCE BETWEEN SIGNS		
	A	B	C
URBAN (<=40 MPH)	100	100	100
URBAN (>=45 MPH)	350	350	350
RURAL	500	500	500
EXPRESSWAY/FREEWAY	1000	1500	2640

Computer File Information		Sheet Revisions	
Creation Date: 07/04/12		Date:	Comments
Created By: Nakao	R-2	01/14/26	REMOVED G20-10/11
Last Modification Date: 01/14/26	R-1	01/20/23	Replaced R52-a(b) with R2-10(11) Updated G20-11 Added Drum/Vertical Panel Symbol Updated Case 3 Lane Lines
Last Modified By: NRIVERA			
CAD Ver.: MicroStation V8 Scale: Not to Scale Units: English			

Colorado Department of Transportation
2829 W. Howard Pl.
Denver, CO 80204
Phone: 303-757-9654
FAX: 303-757-9219
Traffic Safety & Engineering EB

TRAFFIC CONTROLS FOR HIGHWAY CONSTRUCTION

Issued By: Traffic Safety & Engineering Branch July 31, 2019

STANDARD PLAN NO.
S-630-1

Project Sheet Number:

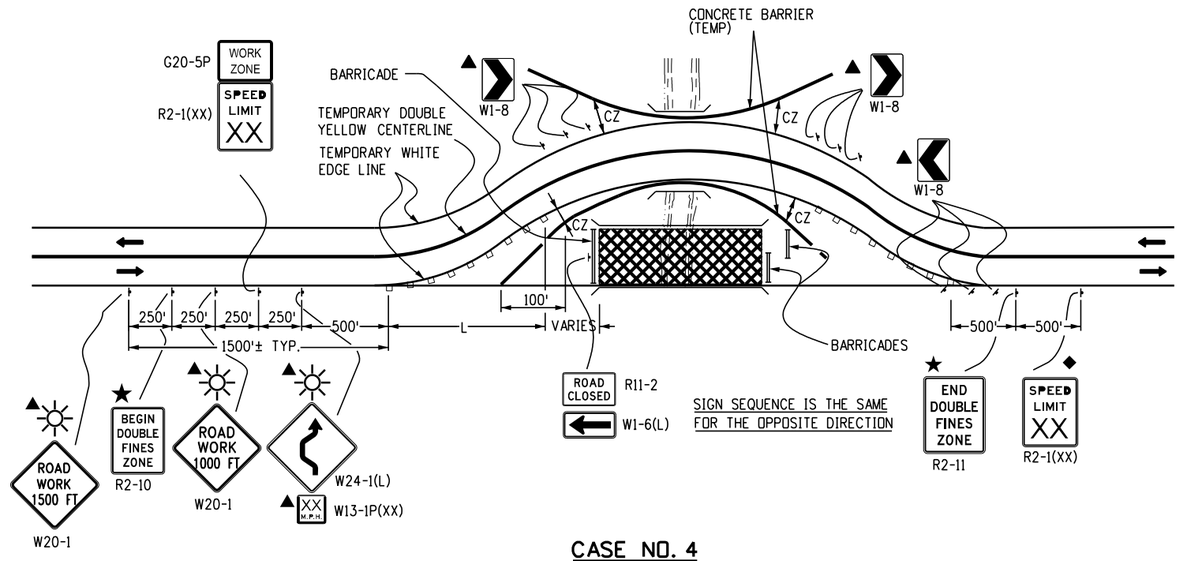

CASE NO. 4
TYPICAL APPLICATION
ROAD CLOSURE, BYPASS DETOUR PROVIDED

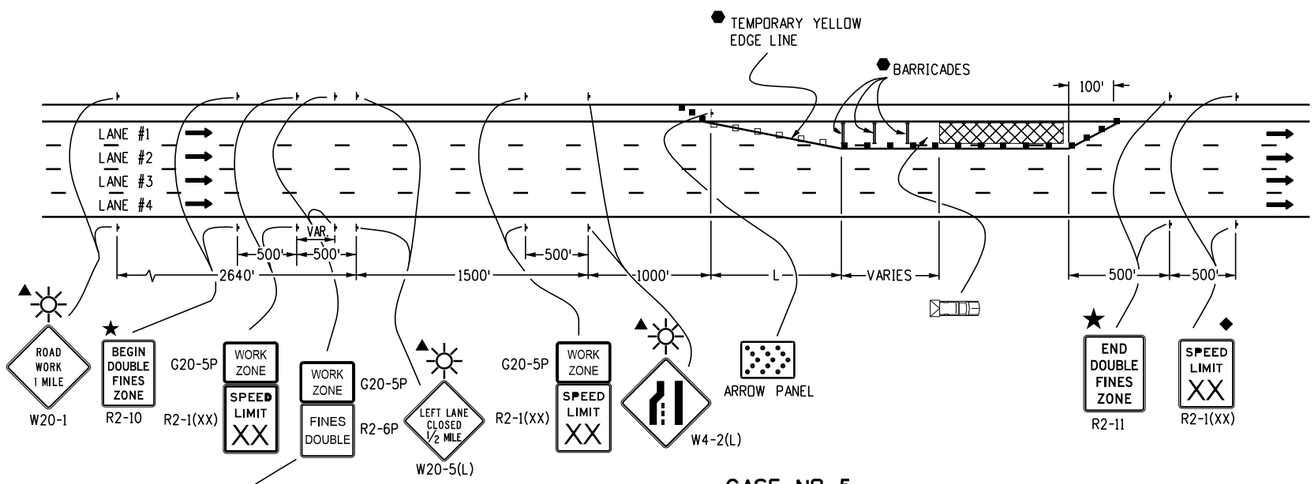

CASE NO. 5
TYPICAL APPLICATION
LANE #1 CLOSURE, MULTI-LANE FREEWAY

LEGEND

- ■ CHANNELIZING DEVICE: FOR TYPE OF DEVICE TO BE USED, SEE SCHEDULE OF TRAFFIC CONTROL DEVICES INCLUDED IN THE PLANS.
- ▫ DRUMS OR VERTICAL PANELS SHALL BE USED TO DELINEATE MERGING TAPERS, SHIFTING TAPERS, AND ONE LANE, TWO-WAY TRAFFIC TAPERS.
- TYPE III BARRICADE
- CONCRETE BARRIER (TEMPORARY)
- FLAGGER STATION
- DIRECTION OF TRAVEL
- WORK AREA
- L — TRANSITION TAPER LENGTH:
  - L = MINIMUM LENGTH OF TAPER
  - SPEED 45 MPH OR MORE: $L = S \times W$
  - SPEED 40 MPH OR LESS: $L = \frac{WS^2}{60}$
  - S = NUMERICAL VALUE OF SPEED LIMIT OR 85 PERCENTILE SPEED
  - W = WIDTH OF OFFSET
  - SHOULDER TAPER = 1/3 L
- ADVANCE WARNING FLASHING OR SEQUENCING ARROW PANEL
- CZ — CLEAR ZONE (SEE GENERAL NOTE 17 ON SHEET 2).
- ▲ THESE DEVICES ARE OPTIONAL. THEIR NEED SHALL BE DETERMINED BY DETOUR DESIGN AND/OR SCOPE OF CONSTRUCTION ACTIVITY, AND ARE REQUIRED WHEN THEY ARE INCLUDED IN THE SCHEDULE OF CONSTRUCTION CONTROL DEVICES.
- ◆ THESE DEVICES ARE NOT OPTIONAL IF THE POSTED SPEED LIMIT IN THE WORK ZONE IS REDUCED.
- VARIES — BUFFER SPACE (SEE GENERAL NOTE 23 ON SHEET 2).
- ⬢ REQUIRED WHEN WORK OCCUPIES THE LOCATION FOR MORE THAN 3 DAYS.
- MOBILE ATTENUATOR
- FLASHING BEACON
- ★ SEE FINES DOUBLE SIGNING NOTES ON SHEET 12.

Computer File Information		Sheet Revisions	
Creation Date: 07/04/12		Date:	Comments
Created By: Nakao	R-2	01/14/26	REMOVED G20-10/11
Last Modification Date: 01/14/26	R-1	01/20/23	Replaced R52-a(b) with R2-10(11) Updated G20-11 Added Drum/Vertical Panel Symbol
Last Modified By: NRIVERA			
CAD Ver.: MicroStation V8 Scale: Not to Scale Units: English			

Colorado Department of Transportation
2829 W. Howard Pl.
Denver, CO 80204
Phone: 303-757-9654
FAX: 303-757-9219
Traffic Safety & Engineering EB

TRAFFIC CONTROLS FOR HIGHWAY CONSTRUCTION

Issued By: Traffic Safety & Engineering Branch July 31, 2019

STANDARD PLAN NO.
S-630-1
Standard Sheet No. 5 of 26
Project Sheet Number:

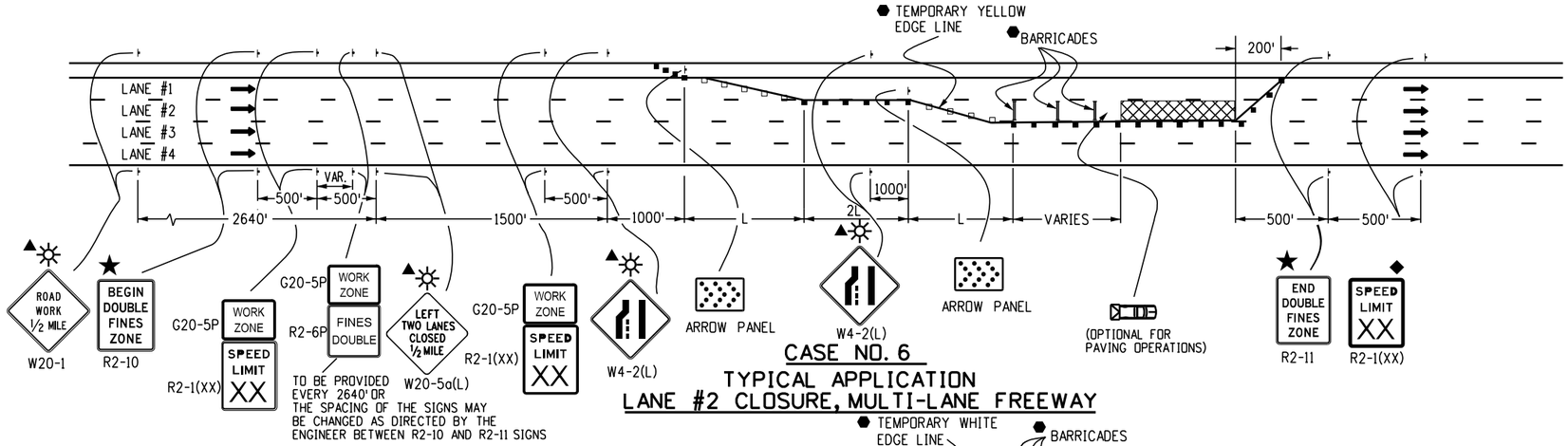

CASE NO. 6
TYPICAL APPLICATION
LANE #2 CLOSURE, MULTI-LANE FREEWAY

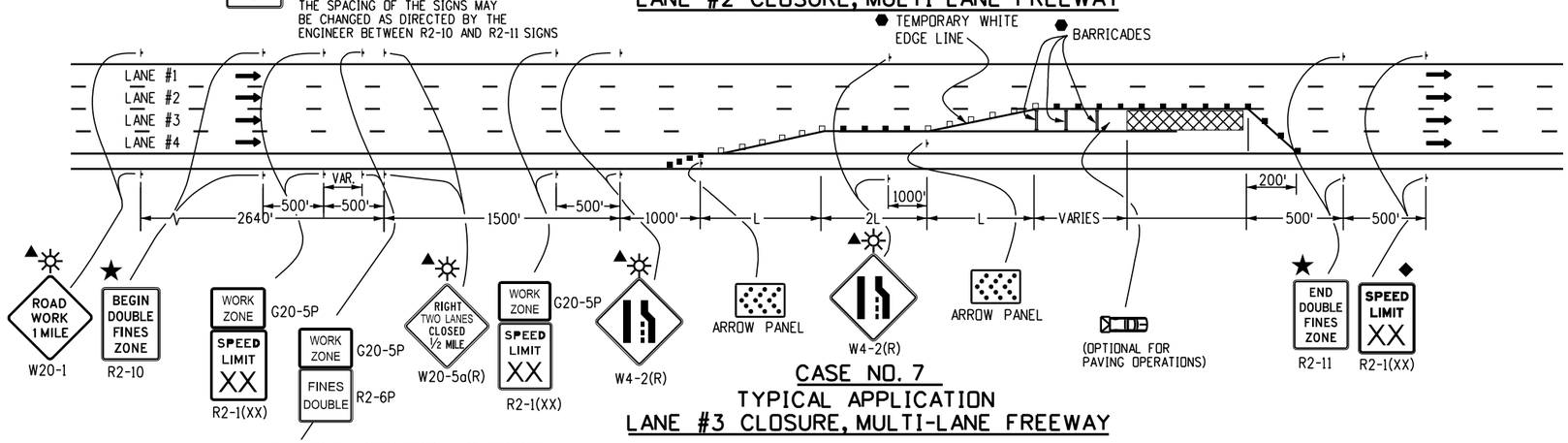

CASE NO. 7
TYPICAL APPLICATION
LANE #3 CLOSURE, MULTI-LANE FREEWAY

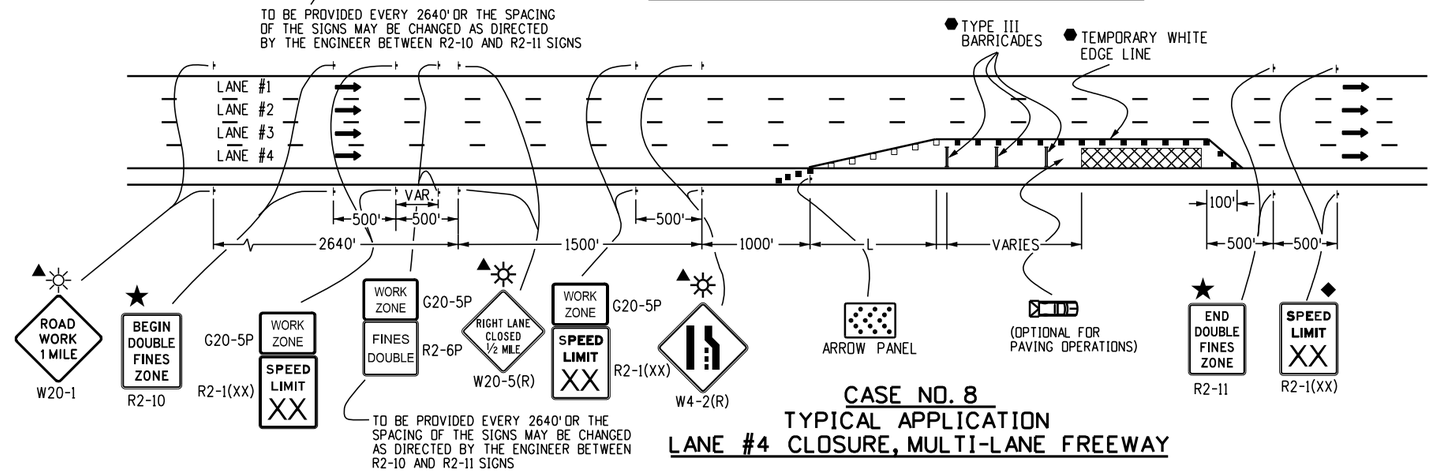

CASE NO. 8
TYPICAL APPLICATION
LANE #4 CLOSURE, MULTI-LANE FREEWAY

LEGEND

- ■ CHANNELIZING DEVICE: FOR TYPE OF DEVICE TO BE USED, SEE SCHEDULE OF TRAFFIC CONTROL DEVICES INCLUDED IN THE PLANS.
- □ DRUMS OR VERTICAL PANELS SHALL BE USED TO DELINEATE MERGING TAPERS, SHIFTING TAPERS, AND ONE LANE, TWO-WAY TRAFFIC TAPERS.
- TYPE III BARRICADE
- CONCRETE BARRIER (TEMPORARY)
- FLAGGER STATION
- DIRECTION OF TRAVEL
- WORK AREA
- L TRANSITION TAPER LENGTH:
  - L = MINIMUM LENGTH OF TAPER
  - SPEED 45 MPH OR MORE: $L = S \times W$
  - SPEED 40 MPH OR LESS: $L = \frac{WS^2}{60}$
  - S = NUMERICAL VALUE OF SPEED LIMIT OR 85 PERCENTILE SPEED
  - W = WIDTH OF OFFSET
  - SHOULDER TAPER = 1/3 L
- ADVANCE WARNING FLASHING OR SEQUENCING ARROW PANEL
- CZ CLEAR ZONE (SEE GENERAL NOTE 17 ON SHEET 2).
- ▲ THESE DEVICES ARE OPTIONAL. THEIR NEED SHALL BE DETERMINED BY DETOUR DESIGN AND/OR SCOPE OF CONSTRUCTION ACTIVITY, AND ARE REQUIRED WHEN THEY ARE INCLUDED IN THE SCHEDULE OF CONSTRUCTION CONTROL DEVICES.
- ◆ THESE DEVICES ARE NOT OPTIONAL IF THE POSTED SPEED LIMIT IN THE WORK ZONE IS REDUCED.
- VARIES BUFFER SPACE (SEE GENERAL NOTE 23 ON SHEET 2).
- ● REQUIRED WHEN WORK OCCUPIES THE LOCATION FOR MORE THAN 3 DAYS.
- MOBILE ATTENUATOR
- FLASHING BEACON
- ★ SEE FINES DOUBLE SIGNING NOTES ON SHEET 12.

Computer File Information	
Creation Date: 07/04/12	
Created By: Roybal	R-2
Last Modification Date: 01/14/26	R-1
Last Modified By: NRIVERA	
CAD Ver.: MicroStation V8 Scale: Not to Scale Units: English	

Sheet Revisions	
Date:	Comments
01/14/26	REMOVED G20-10/11
01/20/23	Replaced R52-a(b) with R2-10(11) Updated G20-11 Added Drum/Vertical Panel Symbol

Colorado Department of Transportation
2829 W. Howard Pl.
Denver, CO 80204
Phone: 303-757-9654
FAX: 303-757-9219
Traffic Safety & Engineering EB

TRAFFIC CONTROLS FOR HIGHWAY CONSTRUCTION

Issued By: Traffic Safety & Engineering Branch July 31, 2019

STANDARD PLAN NO.
S-630-1
Standard Sheet No. 6 of 26
Project Sheet Number:

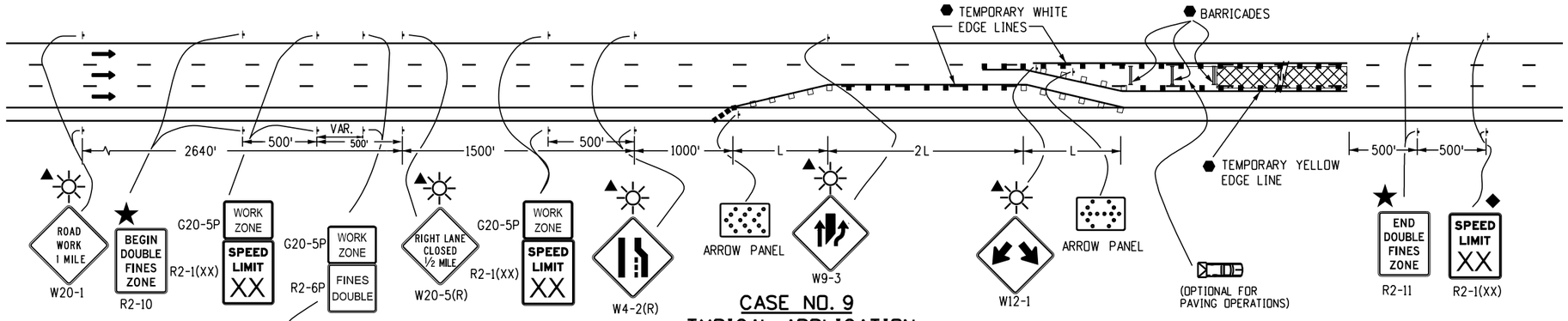

TO BE PROVIDED EVERY 2640' OR THE SPACING OF THE SIGNS MAY BE CHANGED AS DIRECTED BY THE ENGINEER BETWEEN R2-10 AND R2-11 SIGNS

CASE NO. 9
TYPICAL APPLICATION
CENTER LANE CLOSURE - MULTI-LANE FREEWAY

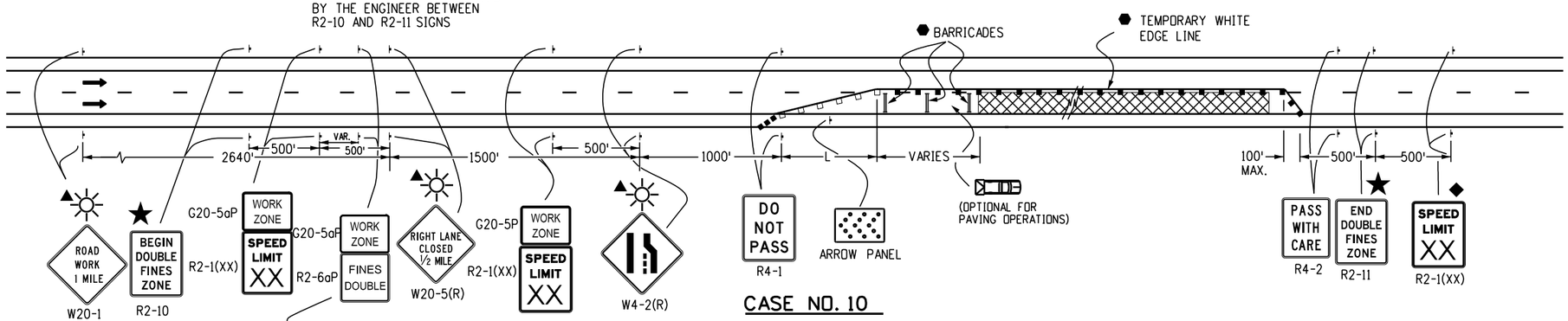

TO BE PROVIDED EVERY 2640' OR THE SPACING OF THE SIGNS MAY BE CHANGED AS DIRECTED BY THE ENGINEER BETWEEN R2-10 AND R2-11 SIGNS

CASE NO. 10
TYPICAL APPLICATION
ONE LANE CLOSED - 4-LANE DIVIDED HIGHWAY

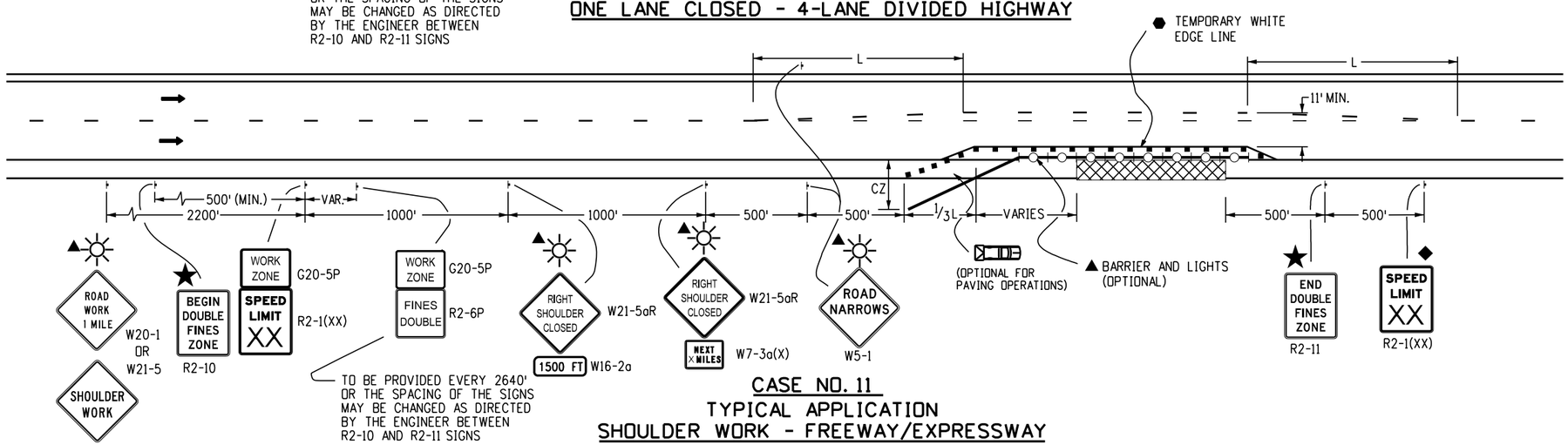

TO BE PROVIDED EVERY 2640' OR THE SPACING OF THE SIGNS MAY BE CHANGED AS DIRECTED BY THE ENGINEER BETWEEN R2-10 AND R2-11 SIGNS

CASE NO. 11
TYPICAL APPLICATION
SHOULDER WORK - FREEWAY/EXPRESSWAY

LEGEND

- ■ CHANNELIZING DEVICE: FOR TYPE OF DEVICE TO BE USED, SEE SCHEDULE OF TRAFFIC CONTROL DEVICES INCLUDED IN THE PLANS.
- □ DRUMS OR VERTICAL PANELS SHALL BE USED TO DELINEATE MERGING TAPERS, SHIFTING TAPERS, AND ONE LANE, TWO-WAY TRAFFIC TAPERS.
- TYPE III BARRICADE
- CONCRETE BARRIER (TEMPORARY)
- FLAGGER STATION
- DIRECTION OF TRAVEL
- WORK AREA
- L — TRANSITION TAPER LENGTH:
  - L = MINIMUM LENGTH OF TAPER
  - SPEED 45 MPH OR MORE: $L = S \times W$
  - SPEED 40 MPH OR LESS: $L = \frac{WS^2}{60}$
  - S = NUMERICAL VALUE OF SPEED LIMIT OR 85 PERCENTILE SPEED
  - W = WIDTH OF OFFSET
  - SHOULDER TAPER = 1/3 L
- ADVANCE WARNING FLASHING OR SEQUENCING ARROW PANEL
- CZ — CLEAR ZONE (SEE GENERAL NOTE 17 ON SHEET 2).
- ▲ THESE DEVICES ARE OPTIONAL. THEIR NEED SHALL BE DETERMINED BY DETOUR DESIGN AND/OR SCOPE OF CONSTRUCTION ACTIVITY, AND ARE REQUIRED WHEN THEY ARE INCLUDED IN THE SCHEDULE OF CONSTRUCTION CONTROL DEVICES.
- ◆ THESE DEVICES ARE NOT OPTIONAL IF THE POSTED SPEED LIMIT IN THE WORK ZONE IS REDUCED.
- FLASHING BEACON
- VARIES — BUFFER SPACE (SEE GENERAL NOTE 23 ON SHEET 2).
- ⬢ REQUIRED WHEN WORK OCCUPIES THE LOCATION FOR MORE THAN 3 DAYS.
- MOBILE ATTENUATOR
- CONCRETE BARRIER (TEMPORARY) WITH LIGHTS
- ★ SEE FINES DOUBLE SIGNING NOTES ON SHEET 12.

Computer File Information	
Creation Date: 07/04/12	
Created By: Roybal	R-2
Last Modification Date: 01/14/26	R-1
Last Modified By: NRIVERA	
CAD Ver.: MicroStation V8 Scale: Not to Scale Units: English	

Sheet Revisions	
Date:	Comments
01/14/26	REMOVED G20-10/11 W9-3a
01/20/23	Replaced R52-a(b) with R2-10(11) Updated G20-11 Added Drum/Vertical Panel Symbol

Colorado Department of Transportation
2829 W. Howard Pl.
Denver, CO 80204
Phone: 303-757-9654
FAX: 303-757-9219
Traffic Safety & Engineering EB

TRAFFIC CONTROLS FOR HIGHWAY CONSTRUCTION

Issued By: Traffic Safety & Engineering Branch July 31, 2019

STANDARD PLAN NO.
S-630-1
Standard Sheet No. 7 of 26
Project Sheet Number:

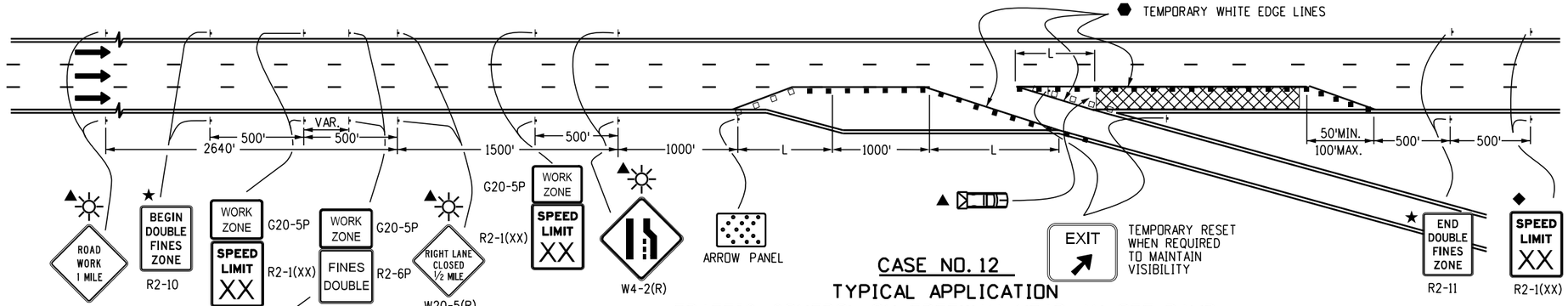

CASE NO. 12

TYPICAL APPLICATION

TRAFFIC CONTROL ON FREEWAY NEAR AN OFF-RAMP

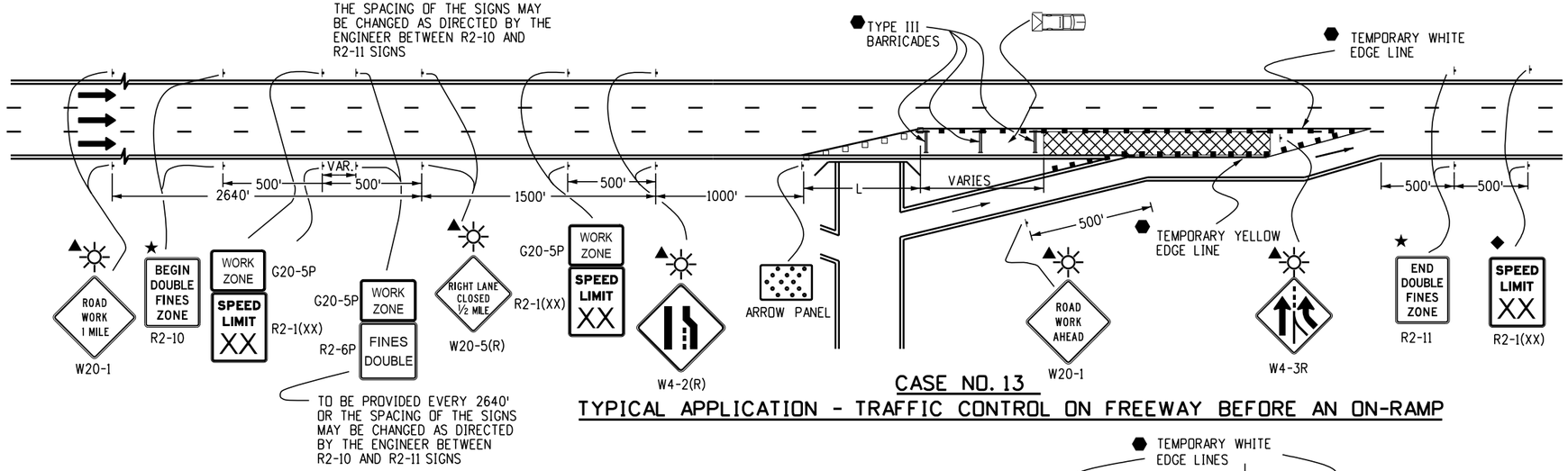

CASE NO. 13

TYPICAL APPLICATION - TRAFFIC CONTROL ON FREEWAY BEFORE AN ON-RAMP

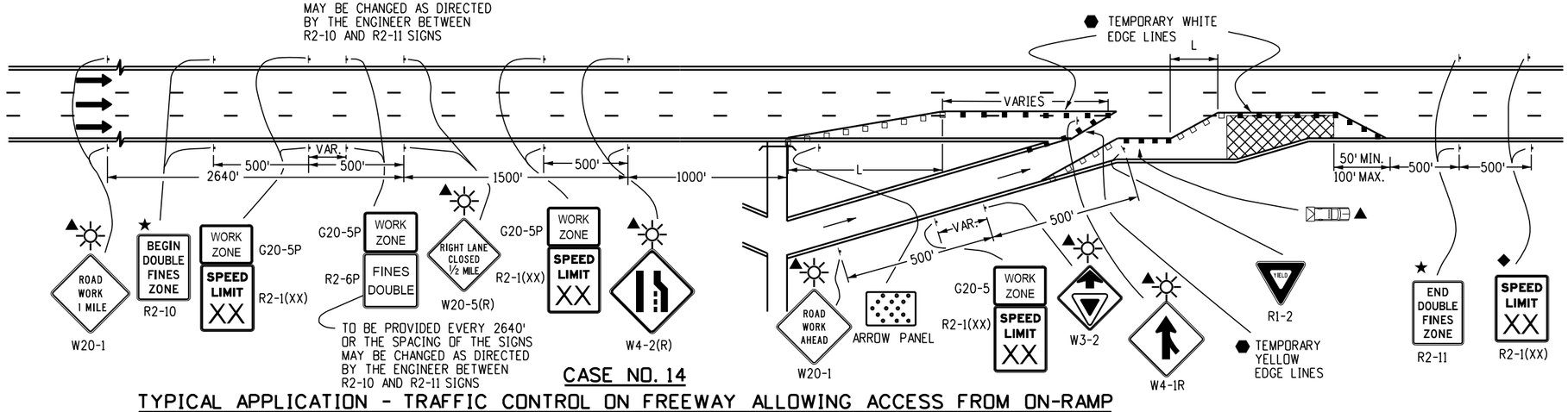

CASE NO. 14

TYPICAL APPLICATION - TRAFFIC CONTROL ON FREEWAY ALLOWING ACCESS FROM ON-RAMP

LEGEND

- ■ CHANNELIZING DEVICE: FOR TYPE OF DEVICE TO BE USED, SEE SCHEDULE OF TRAFFIC CONTROL DEVICES INCLUDED IN THE PLANS.
- □ DRUMS OR VERTICAL PANELS SHALL BE USED TO DELINEATE MERGING TAPERS, SHIFTING TAPERS, AND ONE LANE, TWO-WAY TRAFFIC TAPERS.
- TYPE III BARRICADE
- CONCRETE BARRIER (TEMPORARY)
- FLAGGER STATION
- DIRECTION OF TRAVEL
- WORK AREA
- L TRANSITION TAPER LENGTH:
  - L = MINIMUM LENGTH OF TAPER
  - SPEED 45 MPH OR MORE: $L = S \times W$
  - SPEED 40 MPH OR LESS: $L = \frac{WS^2}{60}$
  - S = NUMERICAL VALUE OF SPEED LIMIT OR 85 PERCENTILE SPEED
  - W = WIDTH OF OFFSET
  - SHOULDER TAPER = 1/3 L
- ADVANCE WARNING FLASHING OR SEQUENCING ARROW PANEL
- CZ CLEAR ZONE (SEE GENERAL NOTE 17 ON SHEET 2).
- ▲ THESE DEVICES ARE OPTIONAL. THEIR NEED SHALL BE DETERMINED BY DETOUR DESIGN AND/OR SCOPE OF CONSTRUCTION ACTIVITY, AND ARE REQUIRED WHEN THEY ARE INCLUDED IN THE SCHEDULE OF CONSTRUCTION CONTROL DEVICES.
- ◆ THESE DEVICES ARE NOT OPTIONAL IF THE POSTED SPEED LIMIT IN THE WORK ZONE IS REDUCED.
- VARIES BUFFER SPACE (SEE GENERAL NOTE 23).
- ⬢ REQUIRED WHEN WORK OCCUPIES THE LOCATION FOR MORE THAN 3 DAYS.
- MOBILE ATTENUATOR
- FLASHING BEACON
- ★ SEE FINES DOUBLE SIGNING NOTES ON SHEET 12.

Computer File Information		Sheet Revisions	
Creation Date: 07/04/12		Date:	Comments
Created By: Nakao	R-2	01/14/26	REMOVED G20-10/11
Last Modification Date: 01/14/26	R-1	01/20/23	Replaced R52-a(b) with R2-10(11) Updated G20-11 Added Drum/Vertical Panel Symbol
Last Modified By: NRIVERA			
CAD Ver.: MicroStation V8 Scale: Not to Scale Units: English			

Colorado Department of Transportation
2829 W. Howard Pl.
Denver, CO 80204
Phone: 303-757-9654
FAX: 303-757-9219
Traffic Safety & Engineering EB

TRAFFIC CONTROLS FOR HIGHWAY CONSTRUCTION

Issued By: Traffic Safety & Engineering Branch July 31, 2019

STANDARD PLAN NO.

S-630-1

Project Sheet Number:

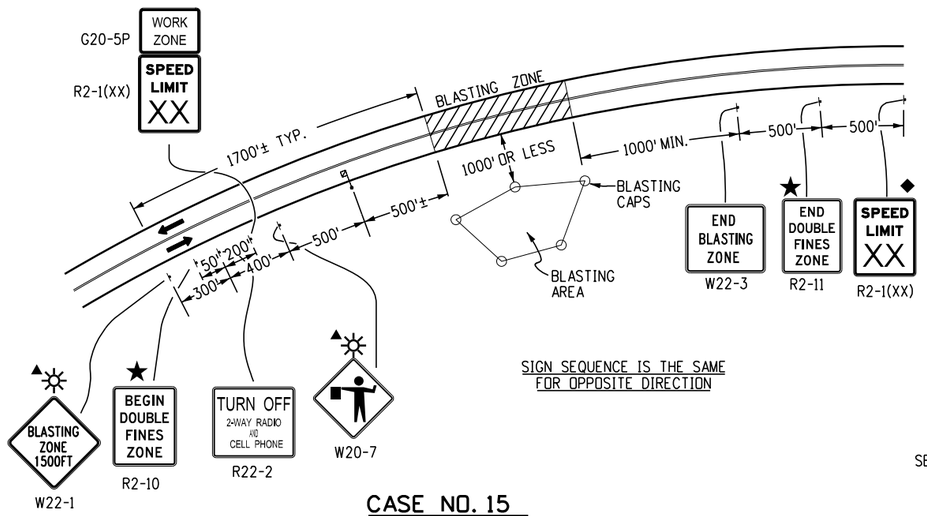

SIGN SEQUENCE IS THE SAME FOR OPPOSITE DIRECTION

CASE NO. 15
TYPICAL APPLICATION
BLASTING ZONE

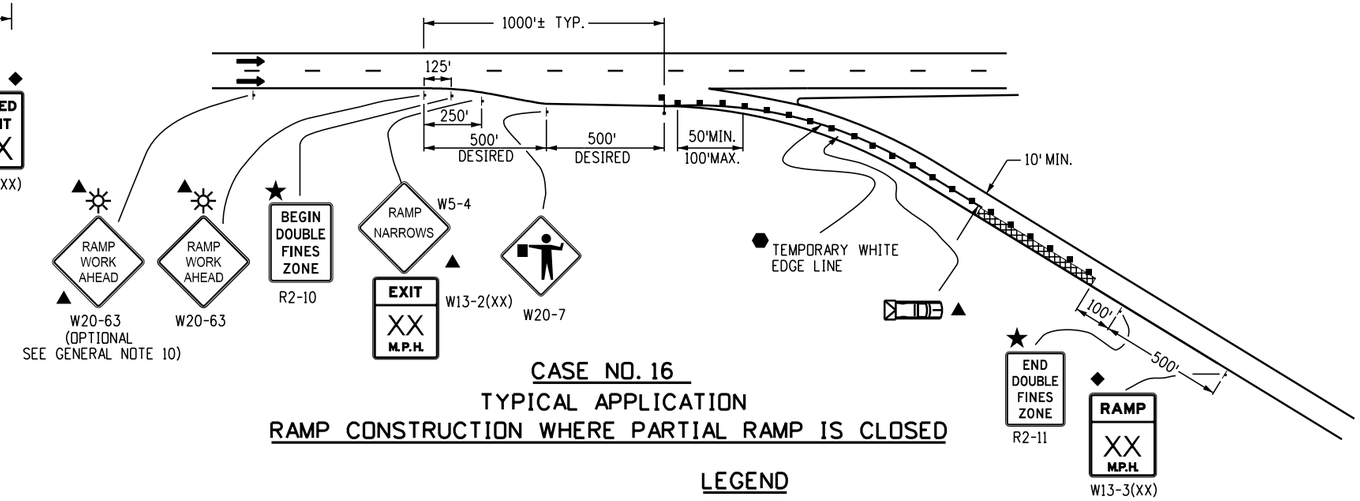

CASE NO. 16
TYPICAL APPLICATION
RAMP CONSTRUCTION WHERE PARTIAL RAMP IS CLOSED

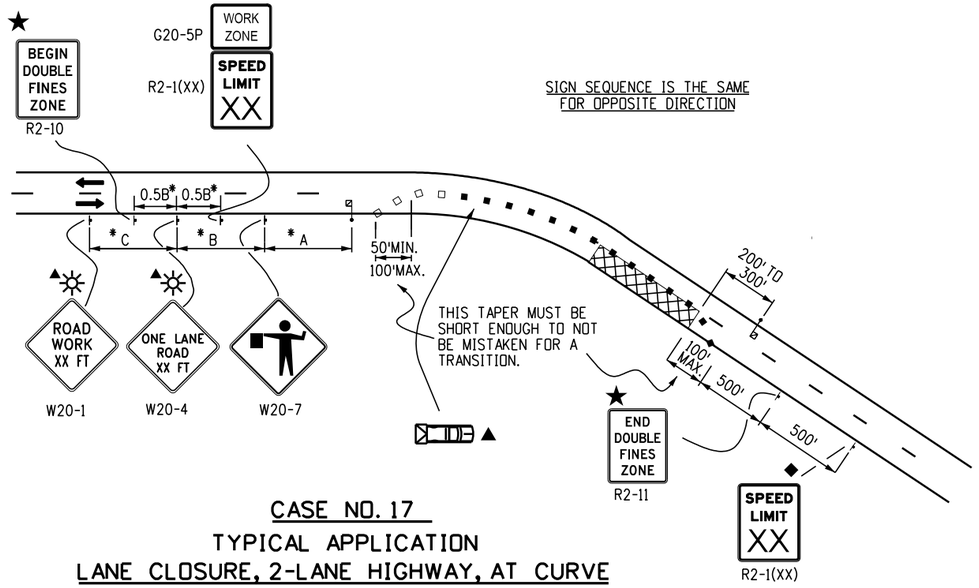

SIGN SEQUENCE IS THE SAME FOR OPPOSITE DIRECTION

CASE NO. 17
TYPICAL APPLICATION
LANE CLOSURE, 2-LANE HIGHWAY, AT CURVE

LEGEND

- ■ CHANNELIZING DEVICE: FOR TYPE OF DEVICE TO BE USED, SEE SCHEDULE OF TRAFFIC CONTROL DEVICES INCLUDED IN THE PLANS.
- □ DRUMS OR VERTICAL PANELS SHALL BE USED TO DELINEATE MERGING TAPERS, SHIFTING TAPERS, AND ONE LANE, TWO-WAY TRAFFIC TAPERS.
- TYPE III BARRICADE
- CONCRETE BARRIER (TEMPORARY)
- FLAGGER STATION
- DIRECTION OF TRAVEL
- WORK AREA
- L TRANSITION TAPER LENGTH:
  - L = MINIMUM LENGTH OF TAPER
  - SPEED 45 MPH OR MORE: $L = S \times W$
  - SPEED 40 MPH OR LESS: $L = \frac{WS^2}{60}$
  - S = NUMERICAL VALUE OF SPEED LIMIT OR 85 PERCENTILE SPEED
  - W = WIDTH OF OFFSET
  - SHOULDER TAPER = 1/3 L
- MOBILE ATTENUATOR
- ★ SEE FINES DOUBLE SIGNING NOTES ON SHEET 12.
- ADVANCE WARNING FLASHING OR SEQUENCING ARROW PANEL
- CZ CLEAR ZONE (SEE GENERAL NOTE 17 ON SHEET 2).
- ▲ THESE DEVICES ARE OPTIONAL. THEIR NEED SHALL BE DETERMINED BY DETOUR DESIGN AND/OR SCOPE OF CONSTRUCTION ACTIVITY, AND ARE REQUIRED WHEN THEY ARE INCLUDED IN THE SCHEDULE OF CONSTRUCTION CONTROL DEVICES.
- ◆ THESE DEVICES ARE NOT OPTIONAL IF THE POSTED SPEED LIMIT IN THE WORK ZONE IS REDUCED.
- FLASHING BEACON
- ⬢ REQUIRED WHEN WORK OCCUPIES THE LOCATION FOR MORE THAN 3 DAYS.

*KEY TO ADVANCE SIGNING DISTANCES

ROAD TYPE	DISTANCE BETWEEN SIGNS		
	A	B	C
URBAN (<=40 MPH)	100	100	100
URBAN (>=45 MPH)	350	350	350
RURAL	500	500	500
EXPRESSWAY/FREEWAY	1000	1500	2640

Computer File Information	
Creation Date: 07/04/12	
Created By: Roybal	R-2
Last Modification Date: 01/14/26	R-1
Last Modified By: NRIVERA	
CAD Ver.: MicroStation V8 Scale: Not to Scale Units: English	

Sheet Revisions	
Date:	Comments
01/14/26	REMOVED G20-10/11
01/20/23	Replaced R52-a(b) with R2-10(11) Updated G20-11 Added Drum/Vertical Panel Symbol

Colorado Department of Transportation
2829 W. Howard Pl.
Denver, CO 80204
Phone: 303-757-9654
FAX: 303-757-9219
Traffic Safety & Engineering

EB

TRAFFIC CONTROLS FOR HIGHWAY CONSTRUCTION

Issued By: Traffic Safety & Engineering Branch July 31, 2019

STANDARD PLAN NO.
S-630-1
Standard Sheet No. 9 of 26
Project Sheet Number:

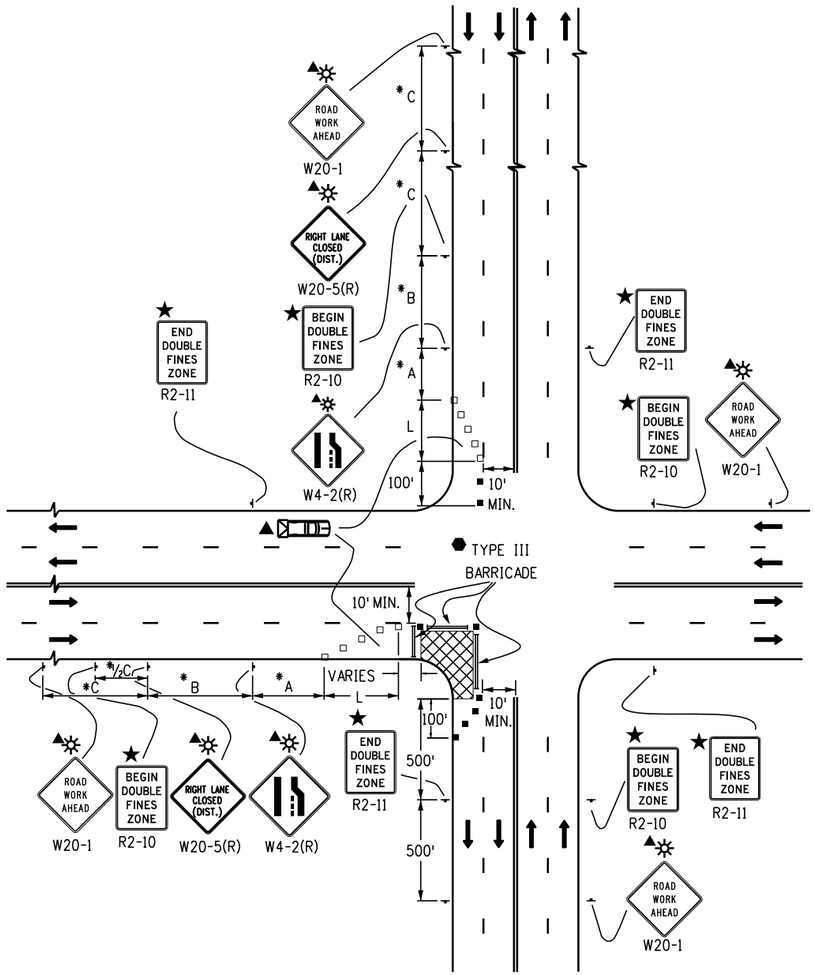

CASE NO. 18
TYPICAL APPLICATION
TRAFFIC CONTROL AROUND A WORK AREA NEAR AN INTERSECTION, ONE LANE CLOSED

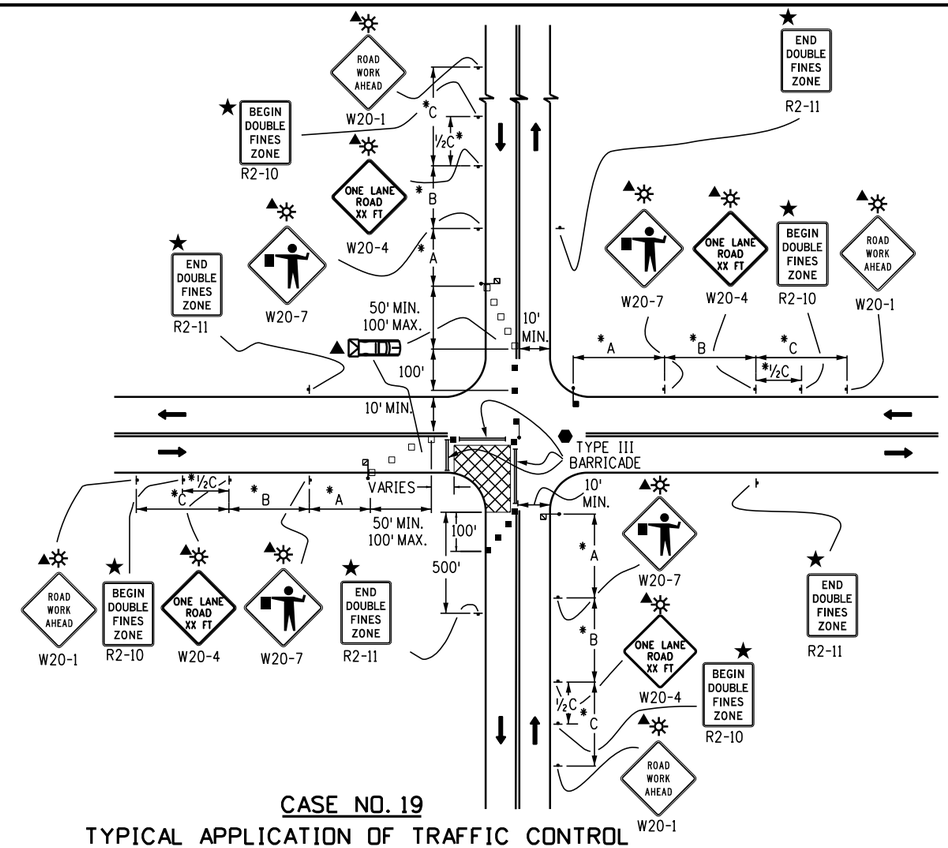

CASE NO. 19
TYPICAL APPLICATION OF TRAFFIC CONTROL AROUND A WORK AREA NEAR AN INTERSECTION

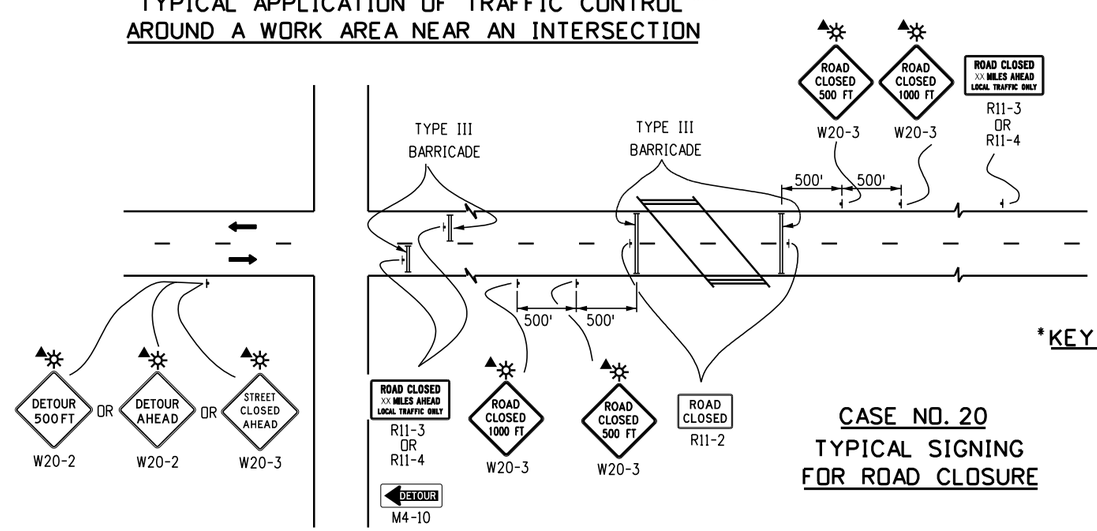

CASE NO. 20
TYPICAL SIGNING FOR ROAD CLOSURE

LEGEND

- ■ CHANNELIZING DEVICE: FOR TYPE OF DEVICE TO BE USED, SEE SCHEDULE OF TRAFFIC CONTROL DEVICES INCLUDED IN THE PLANS.
- □ DRUMS OR VERTICAL PANELS SHALL BE USED TO DELINEATE MERGING TAPERS, SHIFTING TAPERS, AND ONE LANE, TWO-WAY TRAFFIC TAPERS.
- TYPE III BARRICADE
- CONCRETE BARRIER (TEMPORARY)
- FLAGGER STATION
- DIRECTION OF TRAVEL
- WORK AREA
- L TRANSITION TAPER LENGTH:
  - L = MINIMUM LENGTH OF TAPER
  - SPEED 45 MPH OR MORE: $L = S \times W$
  - SPEED 40 MPH OR LESS: $L = \frac{WS^2}{60}$
  - S = NUMERICAL VALUE OF SPEED LIMIT OR 85 PERCENTILE SPEED
  - W = WIDTH OF OFFSET
  - SHOULDER TAPER = 1/3 L
- MOBILE ATTENUATOR
- CZ CLEAR ZONE (SEE GENERAL NOTE 17 ON SHEET 2).
- FLASHING BEACON
- ▲ THESE DEVICES ARE OPTIONAL. THEIR NEED SHALL BE DETERMINED BY DETOUR DESIGN AND/OR SCOPE OF CONSTRUCTION ACTIVITY, AND ARE REQUIRED WHEN THEY ARE INCLUDED IN THE SCHEDULE OF CONSTRUCTION CONTROL DEVICES.
- VARIES BUFFER SPACE (SEE GENERAL NOTE 23 ON SHEET 2).
- ⬢ REQUIRED WHEN WORK OCCUPIES THE LOCATION FOR MORE THAN 3 DAYS.
- ★ SEE FINES DOUBLE SIGNING NOTES ON SHEET 12.

NOTES:

1. SIGN PLACEMENT SHOWN ON CASES 18 AND 19 TYPIFIES RURAL APPLICATIONS. URBAN APPLICATIONS REQUIRE THE SIGNS TO BE PLACED WITHIN ONE, OR PERHAPS TWO, BLOCKS.
2. TRUCK-MOUNTED ATTENUATORS (TMA) OPTIONAL FOR ALL CASES AS DETERMINED BY THE ENGINEER.

*KEY TO ADVANCE SIGNING DISTANCES

ROAD TYPE	DISTANCE BETWEEN SIGNS		
	A	B	C
URBAN (<=40 MPH)	100	100	100
URBAN (>=45 MPH)	350	350	350
RURAL	500	500	500
EXPRESSWAY/FREEWAY	1000	1500	2640

Computer File Information		Sheet Revisions	
Creation Date: 07/04/12		Date:	Comments
Created By: Roybal	R-2	01/14/26	REMOVED G20-10/11
Last Modification Date: 01/14/26	R-1	01/20/23	Replaced R52-a(b) with R2-10(11) Updated G20-11 Added Drum/Vertical Panel Symbol
Last Modified By: NRIVERA			
CAD Ver.: MicroStation V8 Scale: Not to Scale Units: English			

Colorado Department of Transportation
2829 W. Howard Pl.
Denver, CO 80204
Phone: 303-757-9654
FAX: 303-757-9219
Traffic Safety & Engineering EB

TRAFFIC CONTROLS FOR HIGHWAY CONSTRUCTION

Issued By: Traffic Safety & Engineering Branch July 31, 2019

STANDARD PLAN NO.
S-630-1
Standard Sheet No. 10 of 26
Project Sheet Number:

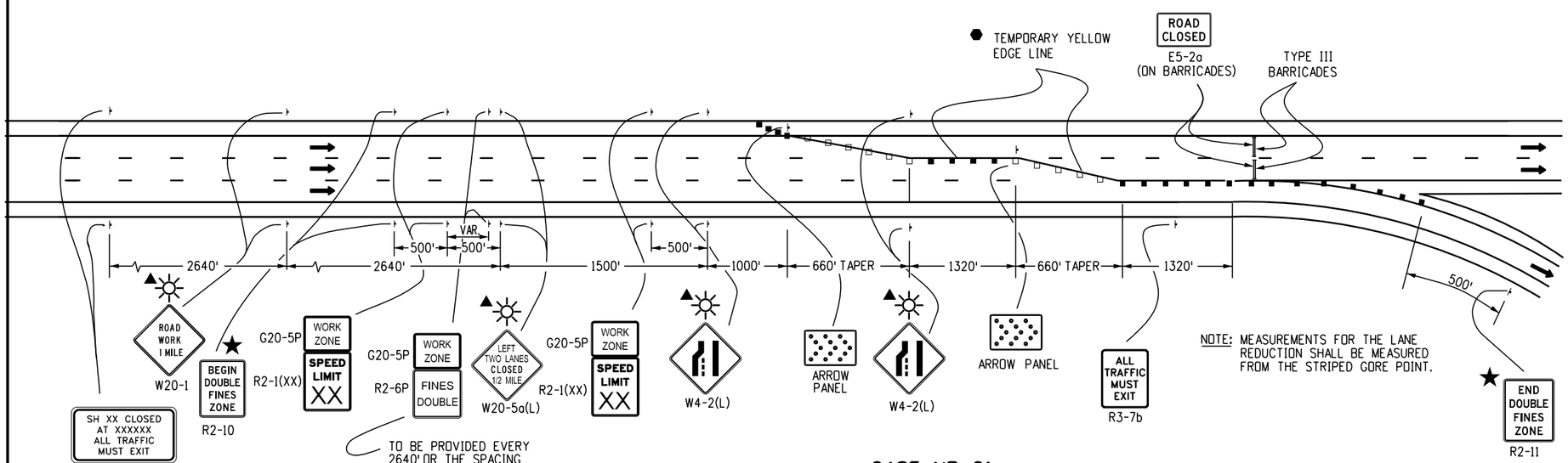

NOTE: MEASUREMENTS FOR THE LANE REDUCTION SHALL BE MEASURED FROM THE STRIPED GORE POINT.

CASE NO. 21
TYPICAL APPLICATION
FULL CLOSURE, MULTI-LANE FREEWAY

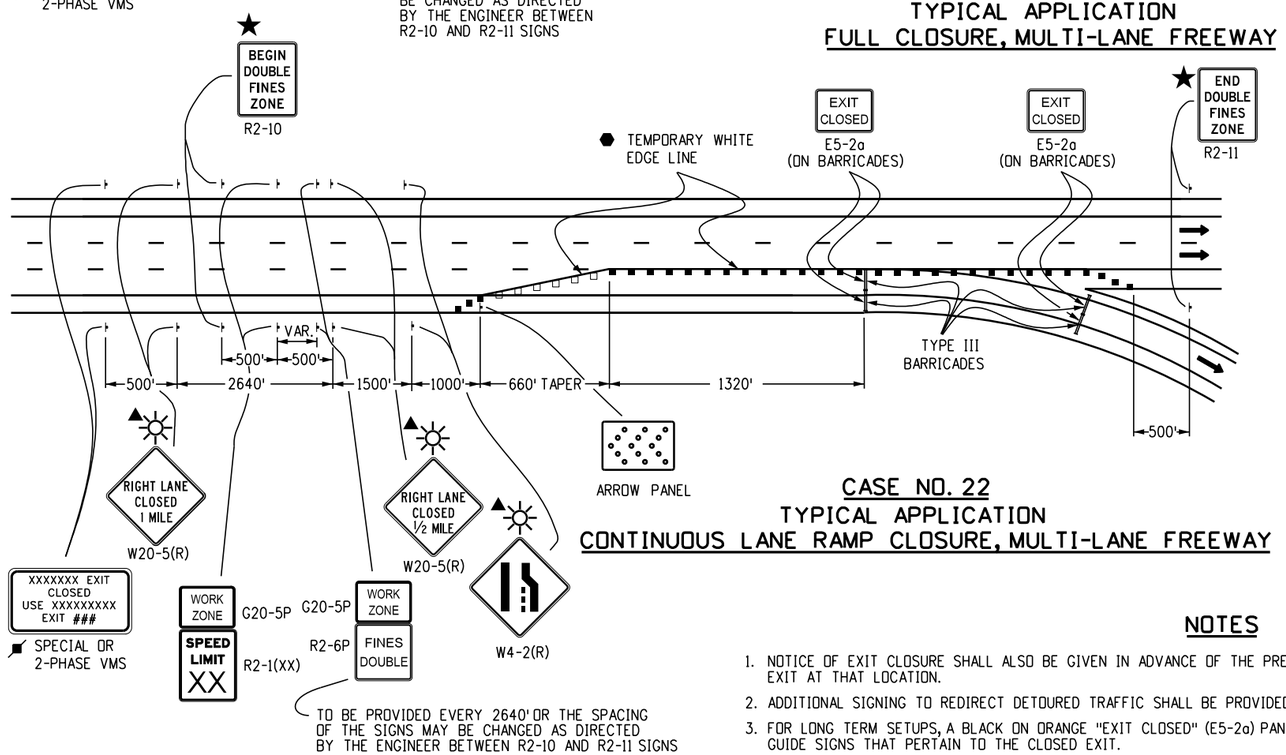

CASE NO. 22
TYPICAL APPLICATION
CONTINUOUS LANE RAMP CLOSURE, MULTI-LANE FREEWAY

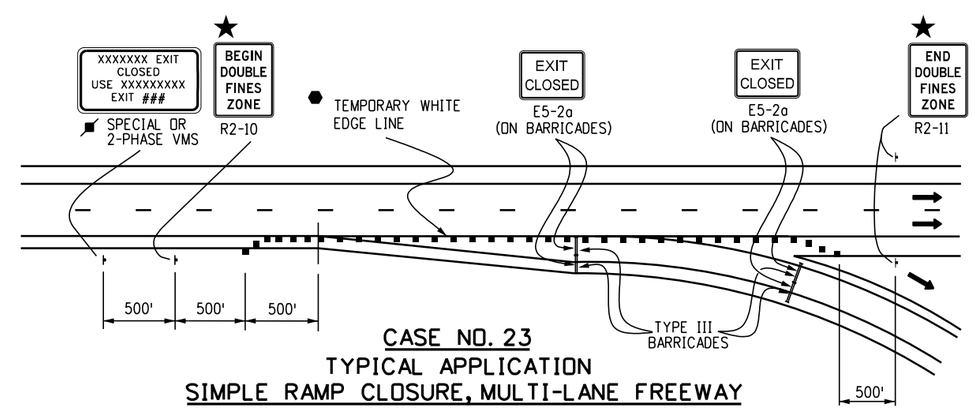

CASE NO. 23
TYPICAL APPLICATION
SIMPLE RAMP CLOSURE, MULTI-LANE FREEWAY

LEGEND

- ADVANCE WARNING FLASHING OR SEQUENCING ARROW PANEL
- ▲ THESE DEVICES ARE OPTIONAL. THEIR NEED WILL BE DETERMINED BY THE DESIGNER BASED ON DETOUR DESIGN AND/OR SCOPE OF THE CONSTRUCTION ACTIVITY, AND ARE REQUIRED WHEN THEY ARE INCLUDED IN THE PLANS.
- ⬢ REQUIRED WHEN WORK OCCUPIES THE LOCATION FOR MORE THAN 3 DAYS.
- ■ CHANNELIZING DEVICE: FOR TYPE OF DEVICE TO BE USED, SEE SCHEDULE OF TRAFFIC CONTROL DEVICES INCLUDED IN THE PLANS.
- □ DRUMS OR VERTICAL PANELS SHALL BE USED TO DELINEATE MERGING TAPERS, SHIFTING TAPERS, AND ONE LANE, TWO-WAY TRAFFIC TAPERS.
- TYPE III BARRICADE
- ← DIRECTION OF TRAVEL
- L TRANSITION TAPER LENGTH:
  - L = MINIMUM LENGTH OF TAPER
  - SPEED 45 MPH OR MORE: $L = S \times W$
  - SPEED 40 MPH OR LESS: $L = \frac{WS^2}{60}$
  - S = NUMERICAL VALUE OF SPEED LIMIT OR 85 PERCENTILE SPEED
  - W = WIDTH OF OFFSET
  - SHOULDER TAPER = 1/3 L
- CLOSURE AND EXIT MESSAGES ON SIGN LEGEND(S) SHOULD BE MODIFIED TO FIT THE SITUATION.
- FLASHING BEACON
- ★ SEE FINES DOUBLE SIGNING NOTES ON SHEET 12.

NOTES

1. NOTICE OF EXIT CLOSURE SHALL ALSO BE GIVEN IN ADVANCE OF THE PREVIOUS EXIT TO PROVIDE MOTORISTS WITH THE OPTION TO EXIT AT THAT LOCATION.
2. ADDITIONAL SIGNING TO REDIRECT DETOURED TRAFFIC SHALL BE PROVIDED FOR IN THE PROJECT'S METHOD OF HANDLING TRAFFIC.
3. FOR LONG TERM SETUPS, A BLACK ON ORANGE "EXIT CLOSED" (E5-2a) PANEL SHALL BE MOUNTED DIAGONALLY ACROSS ALL EXISTING GUIDE SIGNS THAT PERTAIN TO THE CLOSED EXIT.

Computer File Information	
Creation Date: 07/04/12	
Created By: Nakao	
Last Modification Date: 01/14/26	
Last Modified By: NRIVERA	
CAD Ver.: MicroStation V8 Scale: Not to Scale Units: English	

	Sheet Revisions	
	Date:	Comments
R-2	01/14/26	REMOVED G20-10/11
R-1	01/20/23	Replaced R52-a(b) with R2-10(11) Updated G20-11 Added Drum/Vertical Panel Symbol

Colorado Department of Transportation
2829 W. Howard Pl.
Denver, CO 80204
Phone: 303-757-9654
FAX: 303-757-9219
Traffic Safety & Engineering EB

TRAFFIC CONTROLS FOR HIGHWAY CONSTRUCTION

Issued By: Traffic Safety & Engineering Branch July 31, 2019

STANDARD PLAN NO.
S-630-1
Standard Sheet No. 11 of 26
Project Sheet Number:

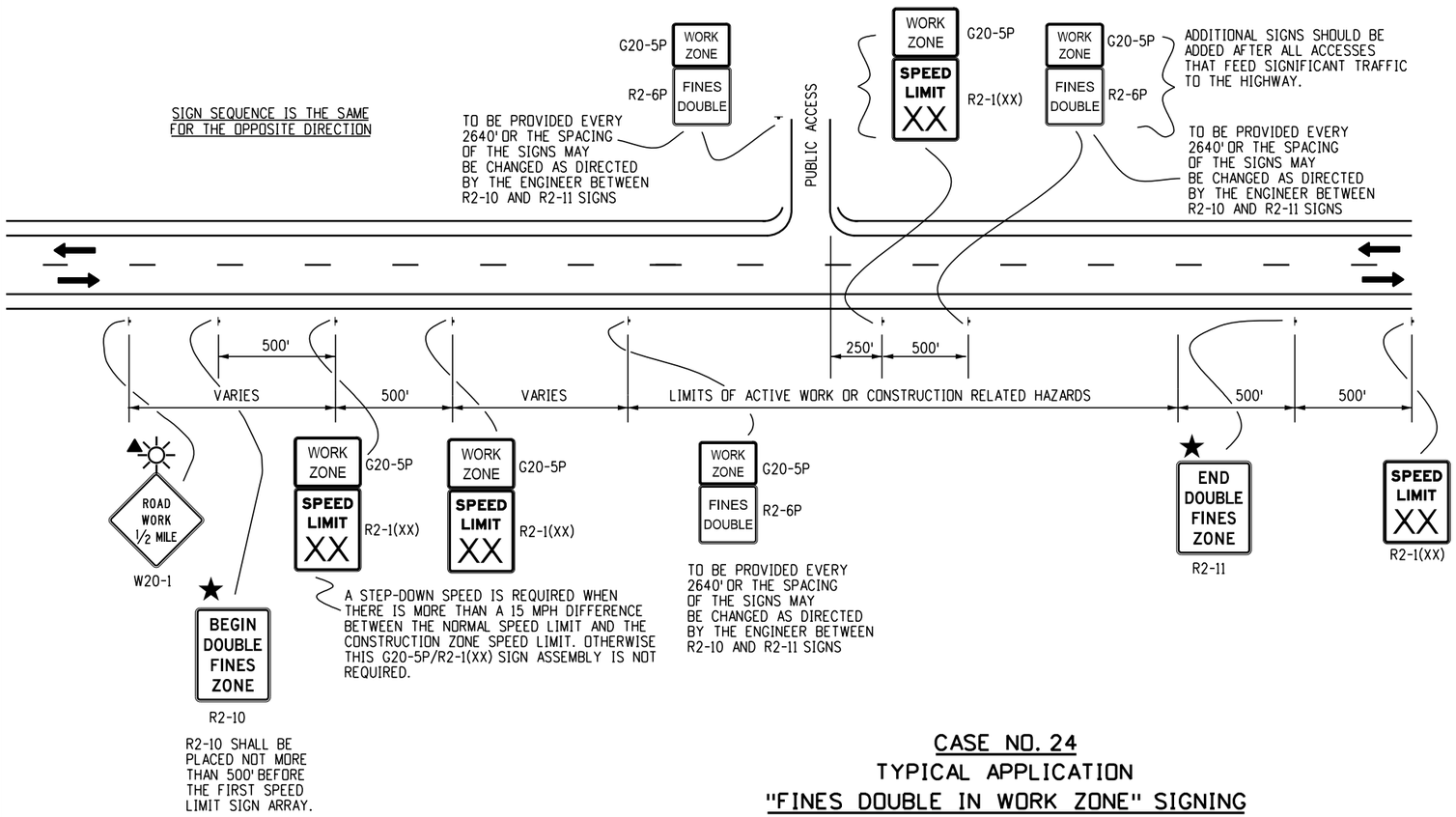

CASE NO. 24
TYPICAL APPLICATION
"FINES DOUBLE IN WORK ZONE" SIGNING
(WITH SPEED REDUCTION)

LEGEND

- DIRECTION OF TRAVEL
- ▲ THESE DEVICES ARE OPTIONAL. THEIR NEED WILL BE DETERMINED BY THE DESIGNER BASED ON DETOUR DESIGN AND/OR SCOPE OF THE CONSTRUCTION ACTIVITY, AND ARE REQUIRED WHEN THEY ARE INCLUDED IN THE PLANS.
- FLASHING BEACON
- ★ FINES DOUBLE SIGNING NOTES, SEE BELOW

FINES DOUBLE SIGNING NOTES:

1. SIGNS SHALL NOT BE PLACED SOONER THAN FOUR HOURS BEFORE WORK IS TO BEGIN AND SHALL BE REMOVED AS SOON AS WORK ACTIVITIES ARE CONCLUDED, UNLESS POTENTIAL HAZARDS INTRODUCED AS A RESULT OF THE WORK ARE STILL PRESENT AT THE END OF THE WORK DAY. IF SIGNS ARE LEFT IN PLACE AFTER WORK ACTIVITIES, THE TRAFFIC CONTROL SUPERVISOR SHALL MAKE AN ENTRY IN THEIR DAILY DIARY THAT JUSTIFIES THEIR USE.

   "HAZARDS" INCLUDE BUT ARE NOT LIMITED TO:
   - EDGE DROP OFFS
   - EQUIPMENT, WORKERS OR NON-SHIELDED OBJECTS IN THE CLEAR ZONE
   - ROUGH PAVEMENT
   - MAJOR CHANGE IN ALIGNMENT
   - REDUCED SHOULDER WIDTH
   - TEMPORARY GUARD RAIL OR BARRIER
   - LANE CLOSURE

2. SIGNS SHALL ONLY BE PLACED WHERE WORKERS ARE PRESENT IN THE ROADWAY OR CLEAR ZONE OR ARE AT RISK, OR WHERE THERE ARE HAZARDS IN THE TRAVELWAY, SHOULDERS OR CLEAR ZONE.

3. SIGNS SHOULD BE PLACED SO THAT MOTORISTS IMMEDIATELY ASSOCIATE THE SIGNS WITH PRESENT WORK ACTIVITIES. IF THE ZONE OF WORK ACTIVITY MOVES, THE SIGNS SHOULD BE MOVED ACCORDINGLY.

4. SIGNING SHOWN IS REQUIRED TO ENFORCE DOUBLE FINES IN A WORK ZONE. ADDITIONAL SIGNING SHALL BE IN ACCORDANCE WITH THAT NORMALLY REQUIRED FOR THE PARTICULAR WORK ZONE. PLACEMENT OF "FINES DOUBLE" SIGNING MAY BE ADJUSTED AS NEEDED TO PROVIDE A MINIMUM 250' SPACING BETWEEN OTHER SIGNING REQUIRED FOR THE SPECIFIC WORK ZONE SETUP.

Computer File Information		Sheet Revisions	
Creation Date: 07/04/12		Date:	Comments
Created By: Roybal	R-2	01/14/26	REMOVED G20-10/11
Last Modification Date: 01/14/26	R-1	01/20/23	Replaced R52-a(b) with R2-10(11) Updated G20-11
Last Modified By: NRIVERA			
CAD Ver.: MicroStation V8 Scale: Not to Scale Units: English			

Colorado Department of Transportation
2829 W. Howard Pl.
Denver, CO 80204
Phone: 303-757-9654
FAX: 303-757-9219
Traffic Safety & Engineering EB

TRAFFIC CONTROLS FOR HIGHWAY CONSTRUCTION

Issued By: Traffic Safety & Engineering Branch July 31, 2019

STANDARD PLAN NO.
S-630-1
Standard Sheet No. 12 of 26
Project Sheet Number:

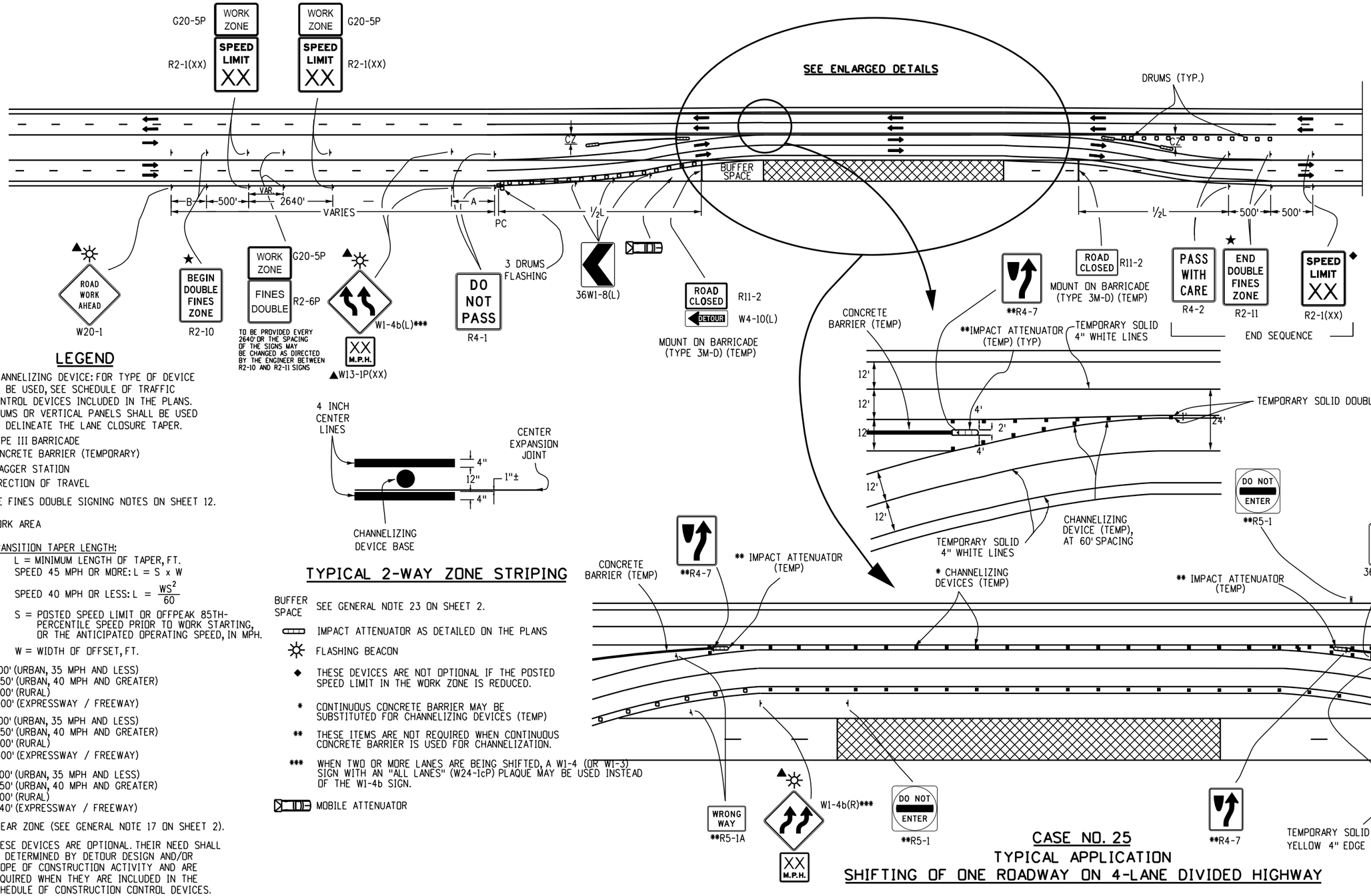

LEGEND

- ▪ CHANNELIZING DEVICE: FOR TYPE OF DEVICE TO BE USED, SEE SCHEDULE OF TRAFFIC CONTROL DEVICES INCLUDED IN THE PLANS. DRUMS OR VERTICAL PANELS SHALL BE USED TO DELINEATE THE LANE CLOSURE TAPER.
- TYPE III BARRICADE
- CONCRETE BARRIER (TEMPORARY)
- FLAGGER STATION
- DIRECTION OF TRAVEL
- ★ SEE FINES DOUBLE SIGNING NOTES ON SHEET 12.
- WORK AREA

L TRANSITION TAPER LENGTH:

L = MINIMUM LENGTH OF TAPER, FT.
SPEED 45 MPH OR MORE: L = S x W

SPEED 40 MPH OR LESS: $L = \frac{WS^2}{60}$

S = POSTED SPEED LIMIT OR OFFPEAK 85TH-PERCENTILE SPEED PRIOR TO WORK STARTING, OR THE ANTICIPATED OPERATING SPEED, IN MPH.

W = WIDTH OF OFFSET, FT.

A = 100' (URBAN, 35 MPH AND LESS)
350' (URBAN, 40 MPH AND GREATER)
500' (RURAL)
1,000' (EXPRESSWAY / FREEWAY)

B = 100' (URBAN, 35 MPH AND LESS)
350' (URBAN, 40 MPH AND GREATER)
500' (RURAL)
1,500' (EXPRESSWAY / FREEWAY)

C = 100' (URBAN, 35 MPH AND LESS)
350' (URBAN, 40 MPH AND GREATER)
500' (RURAL)
2,640' (EXPRESSWAY / FREEWAY)

CZ CLEAR ZONE (SEE GENERAL NOTE 17 ON SHEET 2).

▲ THESE DEVICES ARE OPTIONAL. THEIR NEED SHALL BE DETERMINED BY DETOUR DESIGN AND/OR SCOPE OF CONSTRUCTION ACTIVITY AND ARE REQUIRED WHEN THEY ARE INCLUDED IN THE SCHEDULE OF CONSTRUCTION CONTROL DEVICES.

TYPICAL 2-WAY ZONE STRIPING

BUFFER SPACE — SEE GENERAL NOTE 23 ON SHEET 2.

IMPACT ATTENUATOR AS DETAILED ON THE PLANS

FLASHING BEACON

◆ THESE DEVICES ARE NOT OPTIONAL IF THE POSTED SPEED LIMIT IN THE WORK ZONE IS REDUCED.

* CONTINUOUS CONCRETE BARRIER MAY BE SUBSTITUTED FOR CHANNELIZING DEVICES (TEMP)

** THESE ITEMS ARE NOT REQUIRED WHEN CONTINUOUS CONCRETE BARRIER IS USED FOR CHANNELIZATION.

*** WHEN TWO OR MORE LANES ARE BEING SHIFTED, A W1-4 (OR W1-3) SIGN WITH AN "ALL LANES" (W24-1cP) PLAQUE MAY BE USED INSTEAD OF THE W1-4b SIGN.

MOBILE ATTENUATOR

CASE NO. 25
TYPICAL APPLICATION
SHIFTING OF ONE ROADWAY ON 4-LANE DIVIDED HIGHWAY

Computer File Information		Sheet Revisions	
Creation Date: 07/04/12		Date:	Comments
Created By: Roybal	R-2	01/14/26	REMOVED G20-10/11
Last Modification Date: 01/14/26	R-1	01/20/23	Replaced R52-a(b) with R2-10(11) Updated G20-11 Added Drum/Vertical Panel Symbol
Last Modified By: NRIVERA			
CAD Ver.: MicroStation V8 Scale: Not to Scale Units: English			

Colorado Department of Transportation
2829 W. Howard Pl.
Denver, CO 80204
Phone: 303-757-9654
FAX: 303-757-9219
Traffic Safety & Engineering

EB

TRAFFIC CONTROLS FOR HIGHWAY CONSTRUCTION

Issued By: Traffic Safety & Engineering Branch July 31, 2019

STANDARD PLAN NO.
S-630-1
Standard Sheet No. 13 of 26
Project Sheet Number:

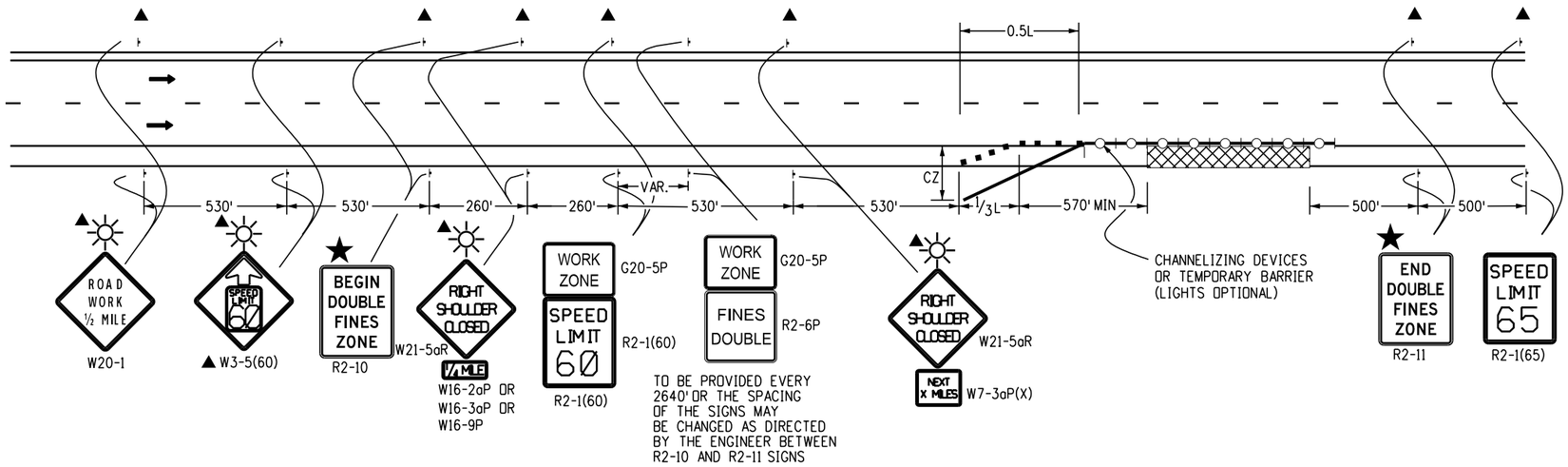

CASE NO. 26
TYPICAL APPLICATION
SHOULDER WORK - FREEWAY/EXPRESSWAY w/ 65 MPH SPEED LIMIT

WHEN HAZARDS (WORKERS, EQUIPMENT, OR TEMPORARY BARRIER) ARE WITHIN 8 FT OF TRAVEL WAY

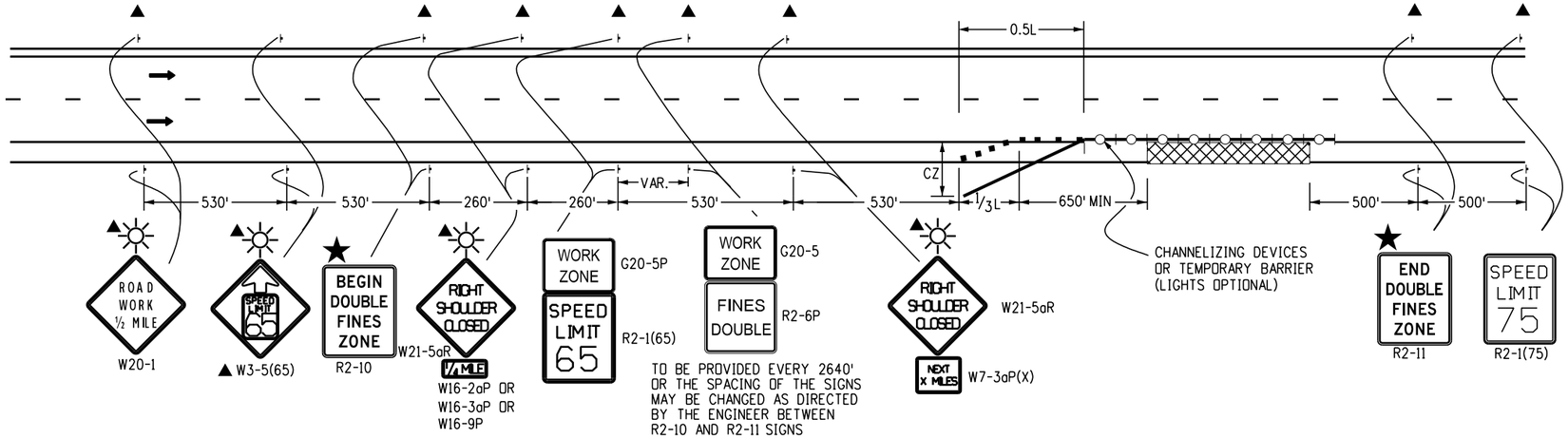

CASE NO. 27
TYPICAL APPLICATION
SHOULDER WORK - FREEWAY/EXPRESSWAY w/ 75 MPH SPEED LIMIT

WHEN HAZARDS (WORKERS, EQUIPMENT, OR TEMPORARY BARRIER) ARE WITHIN 10 FT OF TRAVEL WAY

LEGEND

- ■ CHANNELIZING DEVICE: FOR TYPE OF DEVICE TO BE USED, SEE SCHEDULE OF TRAFFIC CONTROL DEVICES INCLUDED IN THE PLANS. DRUMS OR VERTICAL PANELS SHALL BE USED TO DELINEATE THE LANE CLOSURE TAPER.
- TYPE III BARRICADE
- CONCRETE BARRIER (TEMPORARY)
- FLAGGER STATION
- DIRECTION OF TRAVEL
- WORK AREA
- L — TRANSITION TAPER LENGTH:
  - L = MINIMUM LENGTH OF TAPER
  - SPEED 45 MPH OR MORE: L = S x W
  - S = NUMERICAL VALUE OF SPEED LIMIT OR 85 PERCENTILE SPEED
  - W = WIDTH OF OFFSET
  - SHOULDER TAPER = 1/3 L
- ADVANCE WARNING FLASHING OR SEQUENCING ARROW PANEL
- CZ — CLEAR ZONE (SEE GENERAL NOTE 17 ON SHEET 2).
- ▲ THESE DEVICES ARE OPTIONAL. THEIR NEED SHALL BE DETERMINED BY TRAFFIC VOLUMES AND/OR SCOPE OF CONSTRUCTION ACTIVITY, AND ARE REQUIRED WHEN THEY ARE INCLUDED IN THE SCHEDULE OF CONSTRUCTION CONTROL DEVICES.
- ⬢ REQUIRED WHEN WORK OCCUPIES THE LOCATION FOR MORE THAN 3 DAYS.
- MOBILE ATTENUATOR
- FLASHING BEACON
- ★ SEE FINES DOUBLE SIGNING NOTES ON SHEET 12.

Computer File Information		Sheet Revisions	
Creation Date: 07/04/12		Date:	Comments
Created By: Roybal	R-2	01/14/26	REMOVED G20-11
Last Modification Date: 01/14/26	R-1	01/20/23	Replaced R52-a(b) with R2-10(11) Updated G20-11
Last Modified By: NRIVERA			
CAD Ver.: MicroStation V8 Scale: Not to Scale Units: English			

Colorado Department of Transportation
2829 W. Howard Pl.
Denver, CO 80204
Phone: 303-757-9654
FAX: 303-757-9219
Traffic Safety & Engineering EB

TRAFFIC CONTROLS FOR HIGHWAY CONSTRUCTION

Issued By: Traffic Safety & Engineering Branch July 31, 2019

STANDARD PLAN NO.
S-630-1
Standard Sheet No. 14 of 26
Project Sheet Number:

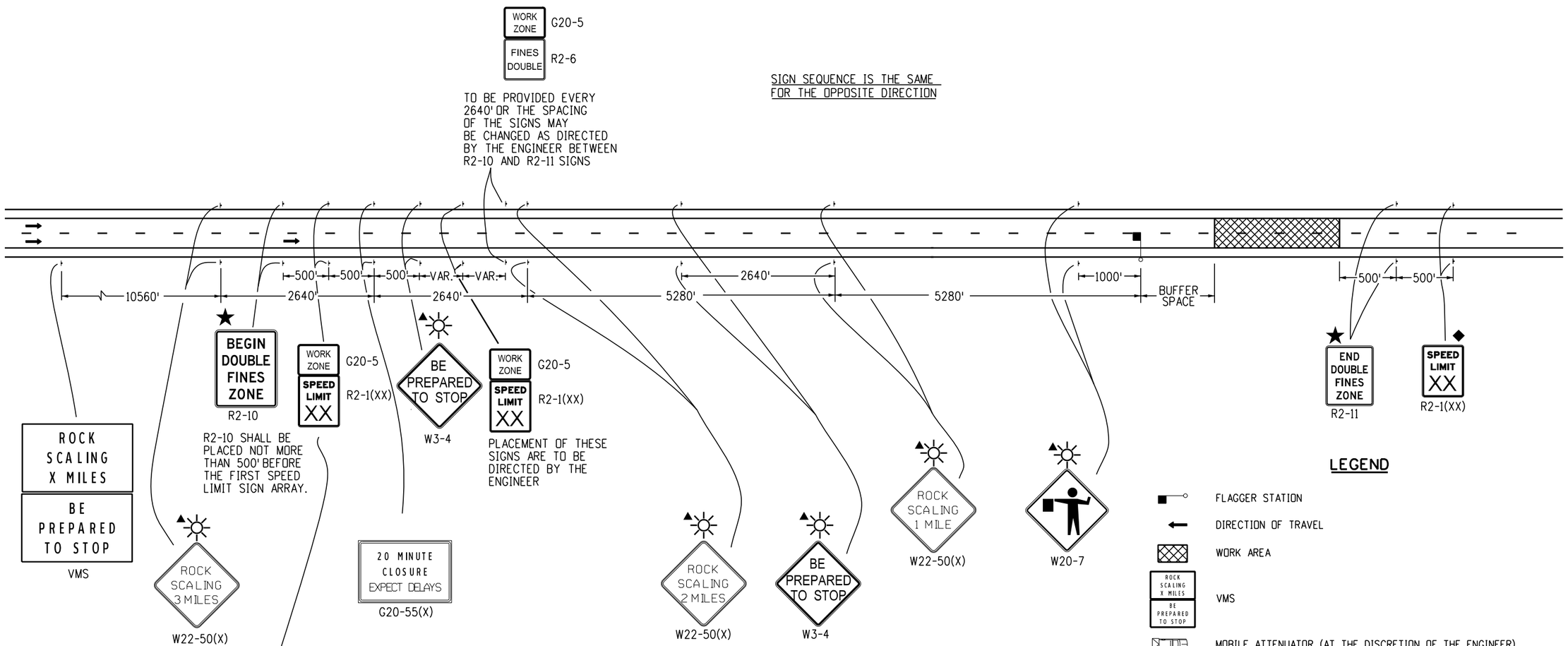

LEGEND

- FLAGGER STATION
- DIRECTION OF TRAVEL
- WORK AREA
- VMS (ROCK SCALING X MILES / BE PREPARED TO STOP)
- MOBILE ATTENUATOR (AT THE DISCRETION OF THE ENGINEER)
- ▲ THESE DEVICES ARE OPTIONAL. THEIR NEED SHALL BE DETERMINED BY DETOUR DESIGN AND/OR SCOPE OF CONSTRUCTION ACTIVITY, AND ARE REQUIRED WHEN THEY ARE INCLUDED IN THE SCHEDULE OF CONSTRUCTION CONTROL DEVICES.
- ◆ THESE DEVICES ARE NOT OPTIONAL IF THE POSTED SPEED LIMIT IN THE WORK ZONE IS REDUCED.
- BUFFER SPACE — SEE GENERAL NOTE 23 ON SHEET 2.
- FLASHING BEACON
- ★ SEE FINES DOUBLE SIGNING NOTES ON SHEET 12.

CASE NO. 28
TYPICAL APPLICATION
ROCK SCALING - ROAD CLOSURE, 4-LANE DIVIDED HIGHWAY

Computer File Information		Sheet Revisions	
Creation Date: 07/04/12		Date:	Comments
Created By: Roybal	R-2	01/14/26	REMOVED G20-10/11
Last Modification Date: 01/14/26	R-1	01/20/23	Replaced R52-a(b) with R2-10(11) Updated G20-11
Last Modified By: NRIVERA			
CAD Ver.: MicroStation V8 Scale: Not to Scale Units: English			

Colorado Department of Transportation
2829 W. Howard Pl.
Denver, CO 80204
Phone: 303-757-9654
FAX: 303-757-9219
Traffic Safety & Engineering EB

TRAFFIC CONTROLS FOR HIGHWAY CONSTRUCTION

Issued By: Traffic Safety & Engineering Branch July 31, 2019

STANDARD PLAN NO.
S-630-1
Standard Sheet No. 15 of 26
Project Sheet Number:

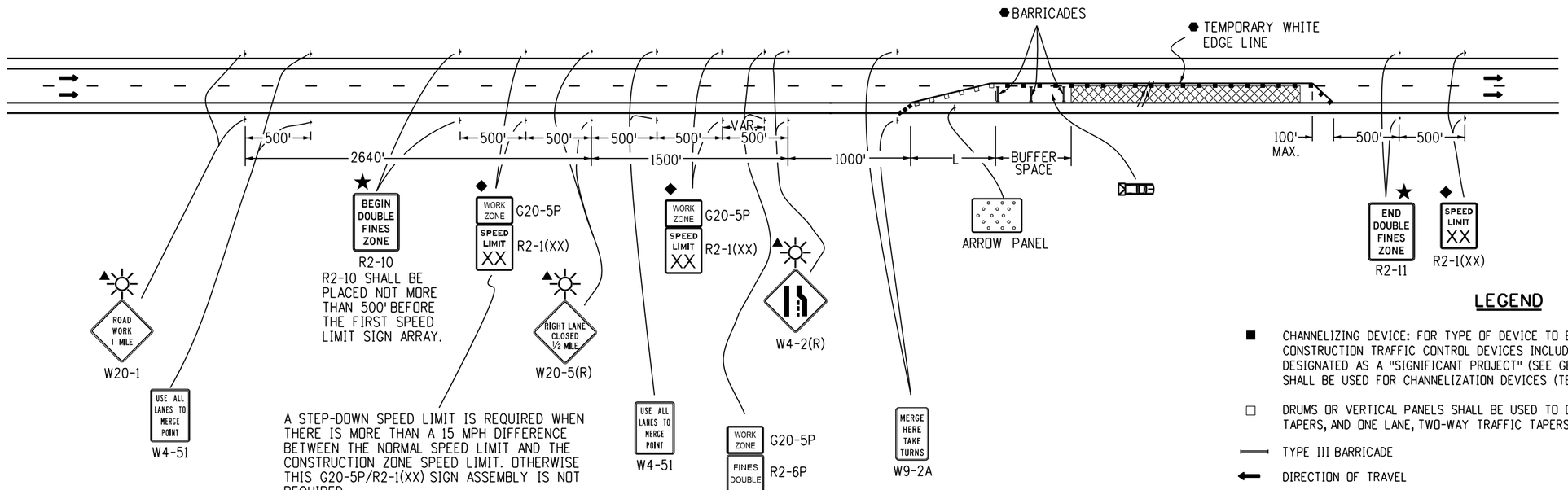

CASE NO. 29
TYPICAL APPLICATION
LATE/ZIPPER MERGING - ONE LANE CLOSED, 4-LANE DIVIDED HIGHWAY

LEGEND

- ■ CHANNELIZING DEVICE: FOR TYPE OF DEVICE TO BE USED, SEE THE SCHEDULE OF CONSTRUCTION TRAFFIC CONTROL DEVICES INCLUDED IN THE PLANS. IF PROJECT IS DESIGNATED AS A "SIGNIFICANT PROJECT" (SEE GENERAL NOTE 28), CONCRETE BARRIER SHALL BE USED FOR CHANNELIZATION DEVICES (TEMP) AS DETERMINED BY THE ENGINEER.
- □ DRUMS OR VERTICAL PANELS SHALL BE USED TO DELINEATE MERGING TAPERS, SHIFTING TAPERS, AND ONE LANE, TWO-WAY TRAFFIC TAPERS.
- TYPE III BARRICADE
- DIRECTION OF TRAVEL
- WORK AREA
- ADVANCE WARNING FLASHING OR SEQUENCING ARROW PANEL.
- ▲ THESE DEVICES ARE OPTIONAL. THEIR NEED SHALL BE DETERMINED BY DETOUR DESIGN AND/OR SCOPE OF CONSTRUCTION ACTIVITY, AND ARE REQUIRED WHEN THEY ARE INCLUDED IN THE SCHEDULE OF CONSTRUCTION CONTROL DEVICES.
- ◆ THESE DEVICES ARE NOT OPTIONAL IF THE POSTED SPEED LIMIT IN THE WORK ZONE IS REDUCED.
- FLASHING BEACON
- ● REQUIRED WHEN WORK OCCUPIES THE LOCATION FOR MORE THAN 3 DAYS.
- ★ SEE FINES DOUBLE SIGNING NOTES ON SHEET 12.
- MOBILE ATTENUATOR
- BUFFER SPACE — SEE GENERAL NOTE 23 ON SHEET 2.

L TRANSITION TAPER LENGTH:

L = MINIMUM LENGTH OF TAPER

SPEED 45 MPH OR MORE: $L = S \times W$

SPEED 40 MPH OR LESS: $L = \frac{WS^2}{60}$

S = NUMERICAL VALUE OF SPEED LIMIT OR 85 PERCENTILE SPEED

W = WIDTH OF OFFSET

SHOULDER TAPER = 1/3 L

Computer File Information		Sheet Revisions	
Creation Date: 07/04/12		Date:	Comments
Created By: Roybal	R-4	01/14/26	REMOVED G20-10/11
Last Modification Date: 01/14/26	R-3	09/22/25	Revised sign sequence.
Last Modified By: NRIVERA	R-2	04/30/24	REVISED G20-11 LEGEND
CAD Ver.: MicroStation V8 Scale: Not to Scale Units: English	R-1	01/20/23	Replaced R52-a(b) with R2-10(11)

Colorado Department of Transportation
2829 W. Howard Pl.
Denver, CO 80204
Phone: 303-757-9654
FAX: 303-757-9219
Traffic Safety & Engineering EB

TRAFFIC CONTROLS FOR HIGHWAY CONSTRUCTION

Issued By: Traffic Safety & Engineering Branch July 31, 2019

STANDARD PLAN NO.
S-630-1
Standard Sheet No. 16 of 26
Project Sheet Number:

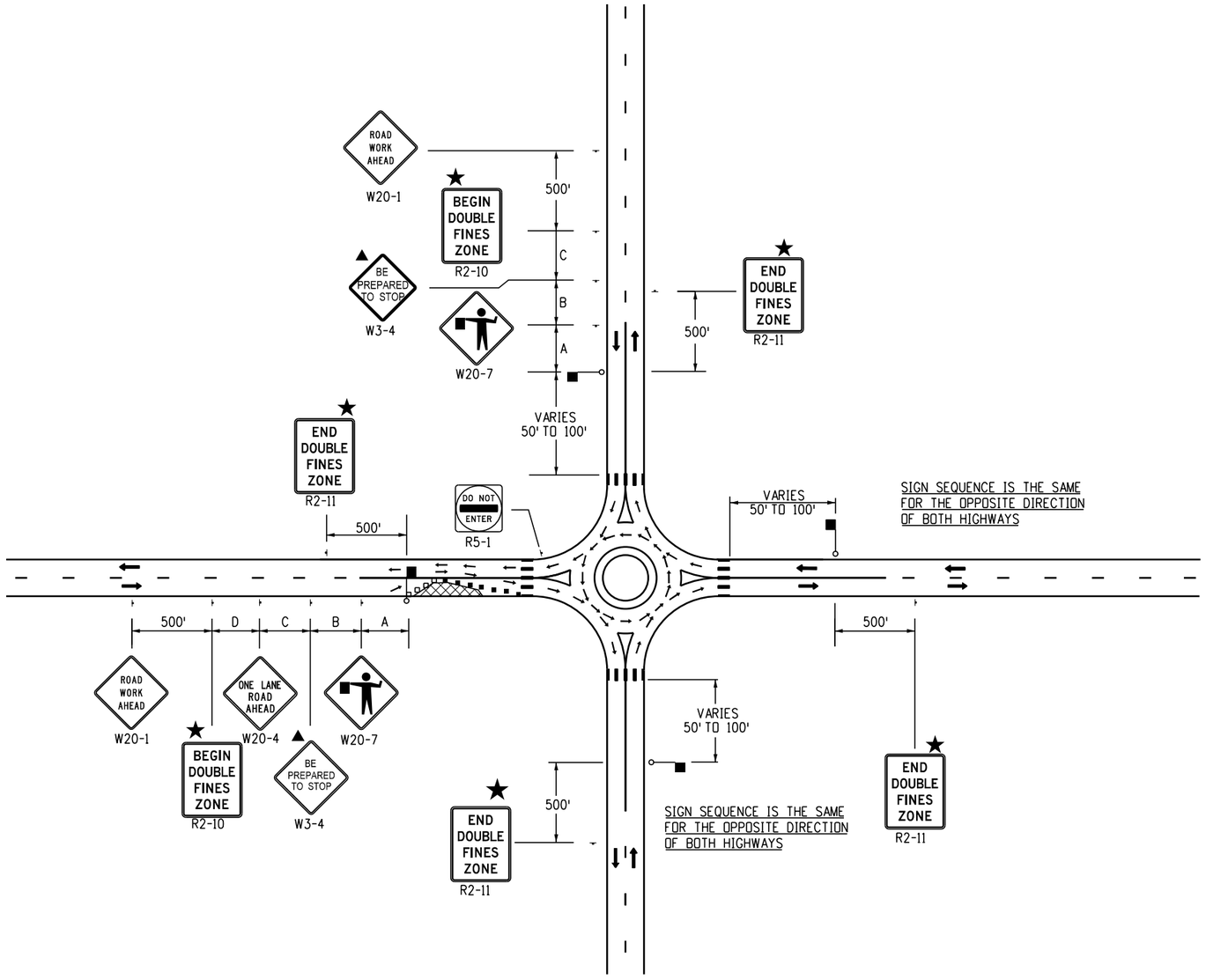

LEGEND

- ■ CHANNELIZING DEVICE: FOR TYPE OF DEVICE TO BE USED, SEE THE SCHEDULE OF CONSTRUCTION TRAFFIC CONTROL DEVICES INCLUDED IN THE PLANS. IF PROJECT IS DESIGNATED AS A "SIGNIFICANT PROJECT" (SEE GENERAL NOTE 28), CONCRETE BARRIER SHALL BE USED FOR CHANNELIZATION DEVICES (TEMP) AS DETERMINED BY THE ENGINEER.
- □ DRUMS OR VERTICAL PANELS SHALL BE USED TO DELINEATE MERGING TAPERS, SHIFTING TAPERS, AND ONE LANE, TWO-WAY TRAFFIC TAPERS.
- TYPE III BARRICADE
- DIRECTION OF TRAVEL
- WORK AREA
- ADVANCE WARNING FLASHING OR SEQUENCING ARROW PANEL.
- ▲ THESE DEVICES ARE OPTIONAL. THEIR NEED SHALL BE DETERMINED BY DETOUR DESIGN AND/OR SCOPE OF CONSTRUCTION ACTIVITY, AND ARE REQUIRED WHEN THEY ARE INCLUDED IN THE SCHEDULE OF CONSTRUCTION CONTROL DEVICES.
- ◆ THESE DEVICES ARE NOT OPTIONAL IF THE POSTED SPEED LIMIT IN THE WORK ZONE IS REDUCED.
- FLASHING BEACON
- ● REQUIRED WHEN WORK OCCUPIES THE LOCATION FOR MORE THAN 3 DAYS.
- ★ SEE FINES DOUBLE SIGNING NOTES ON SHEET 12.
- MOBILE ATTENUATOR
- L TRANSITION TAPER LENGTH:

  L = MINIMUM LENGTH OF TAPER

  SPEED 45 MPH OR MORE: $L = S \times W$

  SPEED 40 MPH OR LESS: $L = \frac{WS^2}{60}$

  S = NUMERICAL VALUE OF SPEED LIMIT OR 85 PERCENTILE SPEED

  W = WIDTH OF OFFSET

  SHOULDER TAPER = 1/3 L
- BUFFER SPACE — SEE GENERAL NOTE 23 ON SHEET 2.
- FLAGGER STATION

CASE NO. 30
TYPICAL APPLICATION
ROUNDABOUT - PARTIAL CLOSURE NEAR ONE-LANE ROUNDABOUT

ROAD TYPE	DISTANCE BETWEEN SIGNS		
	A	B	C
URBAN (<=40 MPH)	100	100	100
URBAN (>=45 MPH)	350	350	350
RURAL	500	500	500
EXPRESSWAY/FREEWAY	1000	1500	2640

Computer File Information	
Creation Date: 07/04/12	
Created By: Nakao	R-2
Last Modification Date: 01/14/26	R-1
Last Modified By: NRIVERA	
CAD Ver.: MicroStation V8 Scale: Not to Scale Units: English	

Sheet Revisions	
Date:	Comments
01/14/26	REMOVED G20-10/11
01/20/23	Replaced R52-a(b) with R2-10(11) Updated G20-11 Added Drum/Vertical Panel Symbol

Colorado Department of Transportation
2829 W. Howard Pl.
Denver, CO 80204
Phone: 303-757-9654
FAX: 303-757-9219
Traffic Safety & Engineering EB

TRAFFIC CONTROLS FOR HIGHWAY CONSTRUCTION

Issued By: Traffic Safety & Engineering Branch July 31, 2019

STANDARD PLAN NO.
S-630-1
Standard Sheet No. 17 of 26
Project Sheet Number:

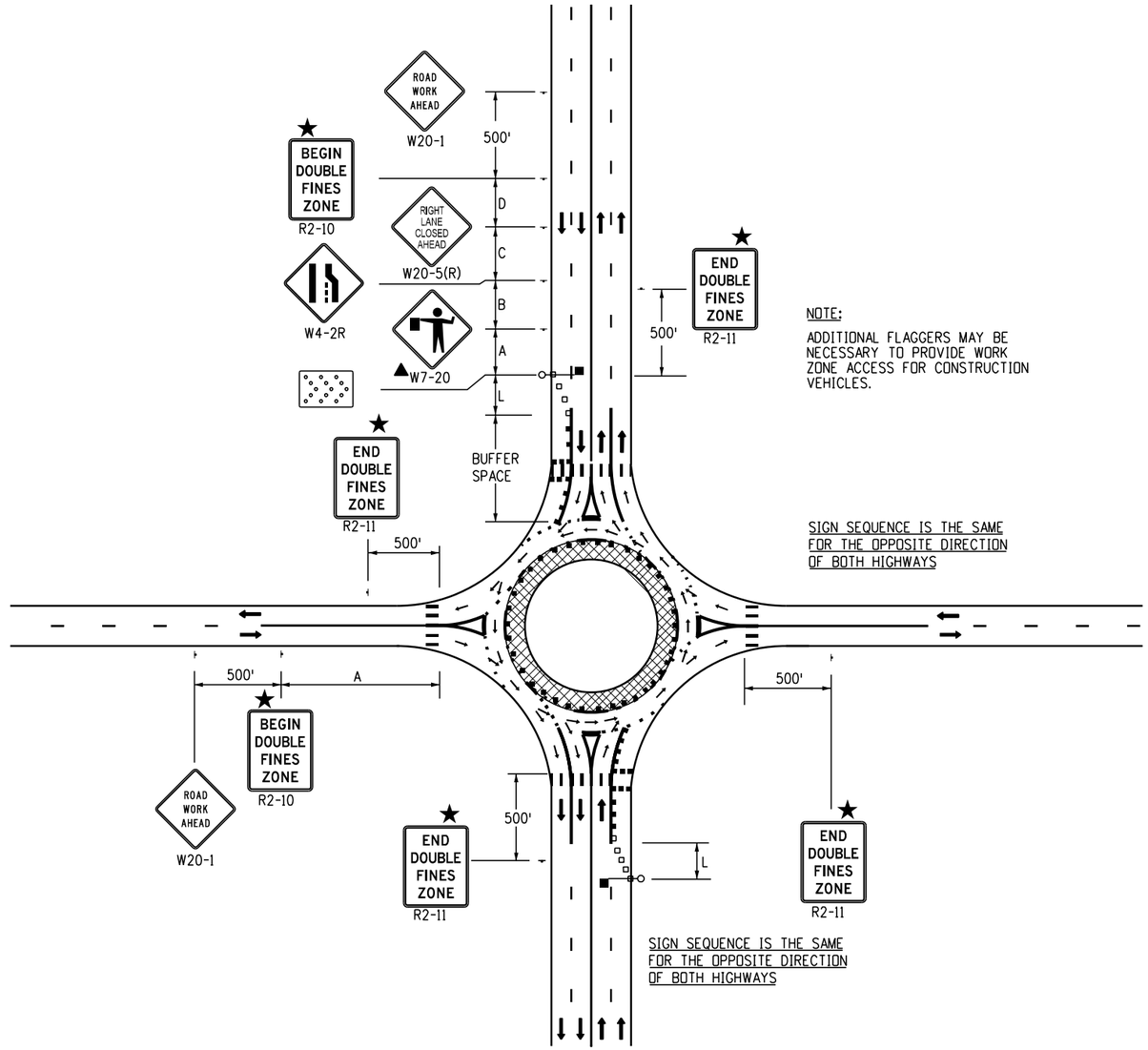

NOTE:

ADDITIONAL FLAGGERS MAY BE NECESSARY TO PROVIDE WORK ZONE ACCESS FOR CONSTRUCTION VEHICLES.

LEGEND

- ✳ A TRUCK DETOUR ROUTE MAY BE NECESSARY TO DIVERT TRUCKS AWAY FROM THE ROUNDABOUT CIRCLE. ALSO NECESSARY IS A STREET NAME AND/OR ROUTE NUMBER SIGN, INFORMING MOTORISTS WHERE THEY NEED TO EXIT THE ROUNDABOUT CIRCLE TO ENTER THE DESIRED STREET AND/OR ROUTE NUMBER.
- ■ CHANNELIZING DEVICE: FOR TYPE OF DEVICE TO BE USED, SEE THE SCHEDULE OF CONSTRUCTION TRAFFIC CONTROL DEVICES INCLUDED IN THE PLANS. IF PROJECT IS DESIGNATED AS A "SIGNIFICANT PROJECT" (SEE GENERAL NOTE 28), CONCRETE BARRIER SHALL BE USED FOR CHANNELIZATION DEVICES (TEMP) AS DETERMINED BY THE ENGINEER.
- □ DRUMS OR VERTICAL PANELS SHALL BE USED TO DELINEATE MERGING TAPERS, SHIFTING TAPERS, AND ONE LANE, TWO-WAY TRAFFIC TAPERS.
- TYPE III BARRICADE
- DIRECTION OF TRAVEL
- WORK AREA
- ADVANCE WARNING FLASHING OR SEQUENCING ARROW PANEL.
- ▲ THESE DEVICES ARE OPTIONAL. THEIR NEED SHALL BE DETERMINED BY DETOUR DESIGN AND/OR SCOPE OF CONSTRUCTION ACTIVITY, AND ARE REQUIRED WHEN THEY ARE INCLUDED IN THE SCHEDULE OF CONSTRUCTION CONTROL DEVICES.
- ◆ THESE DEVICES ARE NOT OPTIONAL IF THE POSTED SPEED LIMIT IN THE WORK ZONE IS REDUCED.
- FLASHING BEACON
- ● REQUIRED WHEN WORK OCCUPIES THE LOCATION FOR MORE THAN 3 DAYS.
- ★ SEE FINES DOUBLE SIGNING NOTES ON SHEET 12.
- MOBILE ATTENUATOR
- L TRANSITION TAPER LENGTH:

  L = MINIMUM LENGTH OF TAPER

  SPEED 45 MPH OR MORE: $L = S \times W$

  SPEED 40 MPH OR LESS: $L = \frac{WS^2}{60}$

  S = NUMERICAL VALUE OF SPEED LIMIT OR 85 PERCENTILE SPEED

  W = WIDTH OF OFFSET

  SHOULDER TAPER = 1/3 L
- BUFFER SPACE — SEE GENERAL NOTE 23 ON SHEET 2.
- FLAGGER STATION

CASE NO. 31
TYPICAL APPLICATION *
ROUNDABOUT - INSIDE LANE CLOSURE FOR TWO-LANE ROUNDABOUT

ROAD TYPE	DISTANCE BETWEEN SIGNS		
	A	B	C
URBAN (<=40 MPH)	100	100	100
URBAN (>=45 MPH)	350	350	350
RURAL	500	500	500
EXPRESSWAY/FREEWAY	1000	1500	2640

Computer File Information		Sheet Revisions	
Creation Date: 07/04/12		Date:	Comments
Created By: Nakao	R-2	01/14/26	REMOVED G20-10/11 REVISED G20-5
Last Modification Date: 01/14/26	R-1		
Last Modified By: NRIVERA		01/20/23	Replaced R52-a(b) with R2-10(11) ~~Updated G20-11~~
CAD Ver.: MicroStation V8 Scale: Not to Scale Units: English			Added Drum/Vertical Panel Symbol

Colorado Department of Transportation
2829 W. Howard Pl.
Denver, CO 80204
Phone: 303-757-9654
FAX: 303-757-9219
Traffic Safety & Engineering EB

TRAFFIC CONTROLS FOR HIGHWAY CONSTRUCTION

Issued By: Traffic Safety & Engineering Branch July 31, 2019

STANDARD PLAN NO.
S-630-1
Standard Sheet No. 18 of 26
Project Sheet Number:

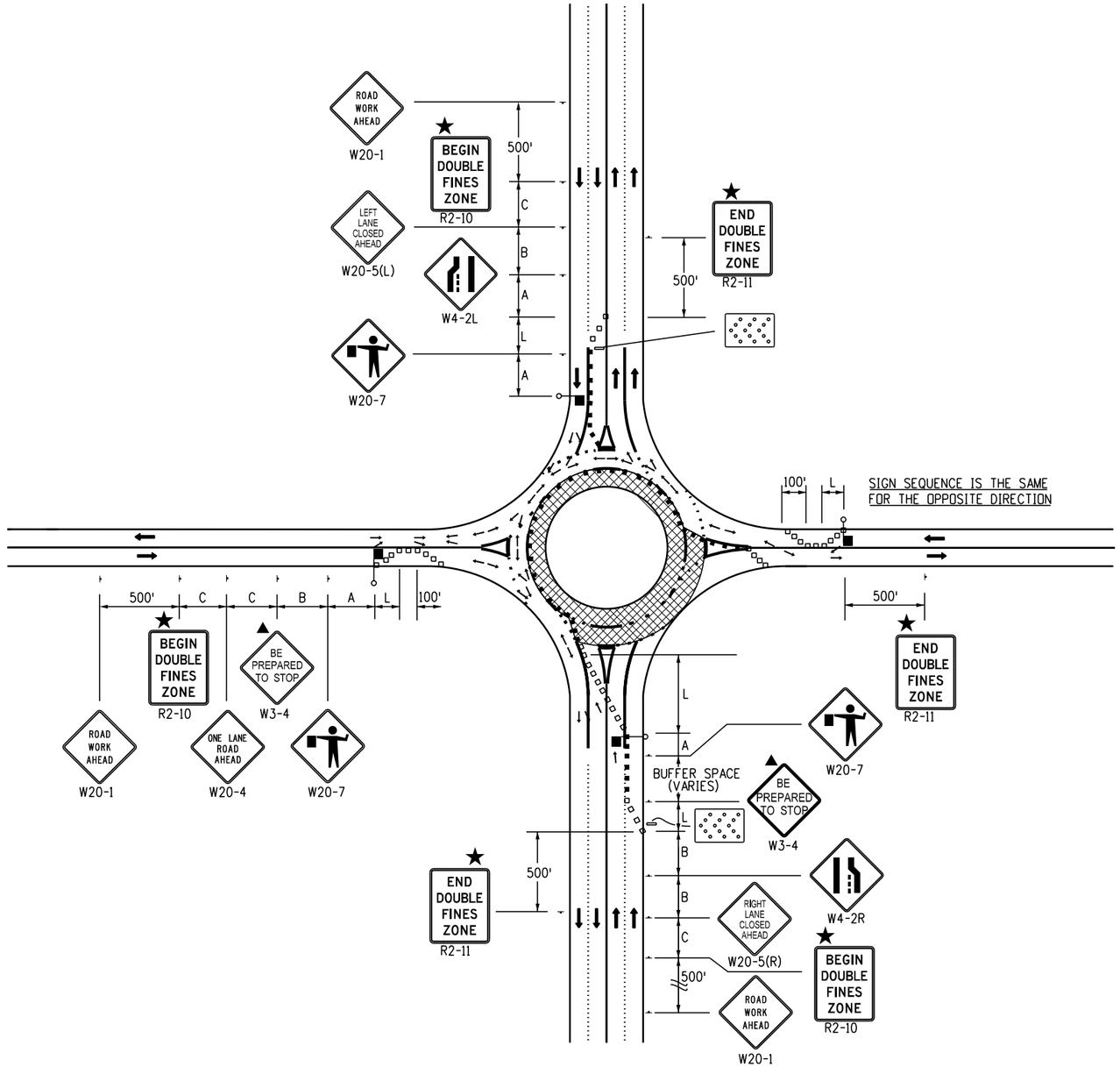

LEGEND

✳ A TRUCK DETOUR ROUTE MAY BE NECESSARY TO DIVERT TRUCKS AWAY FROM THE ROUNDABOUT CIRCLE. ALSO NECESSARY IS A STREET NAME AND/OR ROUTE NUMBER SIGN, INFORMING MOTORISTS WHERE THEY NEED TO EXIT THE ROUNDABOUT CIRCLE TO ENTER THE DESIRED STREET AND/OR ROUTE NUMBER.

■ CHANNELIZING DEVICE: FOR TYPE OF DEVICE TO BE USED, SEE THE SCHEDULE OF CONSTRUCTION TRAFFIC CONTROL DEVICES INCLUDED IN THE PLANS. IF PROJECT IS DESIGNATED AS A "SIGNIFICANT PROJECT" (SEE GENERAL NOTE 28), CONCRETE BARRIER SHALL BE USED FOR CHANNELIZATION DEVICES (TEMP) AS DETERMINED BY THE ENGINEER.

□ DRUMS OR VERTICAL PANELS SHALL BE USED TO DELINEATE MERGING TAPERS, SHIFTING TAPERS, AND ONE LANE, TWO-WAY TRAFFIC TAPERS.

TYPE III BARRICADE

DIRECTION OF TRAVEL

WORK AREA

ADVANCE WARNING FLASHING OR SEQUENCING ARROW PANEL.

▲ THESE DEVICES ARE OPTIONAL. THEIR NEED SHALL BE DETERMINED BY DETOUR DESIGN AND/OR SCOPE OF CONSTRUCTION ACTIVITY, AND ARE REQUIRED WHEN THEY ARE INCLUDED IN THE SCHEDULE OF CONSTRUCTION CONTROL DEVICES.

◆ THESE DEVICES ARE NOT OPTIONAL IF THE POSTED SPEED LIMIT IN THE WORK ZONE IS REDUCED.

FLASHING BEACON

⬢ REQUIRED WHEN WORK OCCUPIES THE LOCATION FOR MORE THAN 3 DAYS.

★ SEE FINES DOUBLE SIGNING NOTES ON SHEET 12.

MOBILE ATTENUATOR

L TRANSITION TAPER LENGTH:

L = MINIMUM LENGTH OF TAPER

SPEED 45 MPH OR MORE: $L = S \times W$

SPEED 40 MPH OR LESS: $L = \frac{WS^2}{60}$

S = NUMERICAL VALUE OF SPEED LIMIT OR 85 PERCENTILE SPEED

W = WIDTH OF OFFSET

SHOULDER TAPER = 1/3 L

BUFFER SPACE — SEE GENERAL NOTE 23 ON SHEET 2.

FLAGGER STATION

ROAD TYPE	DISTANCE BETWEEN SIGNS		
	A	B	C
URBAN (<=40 MPH)	100	100	100
URBAN (>=45 MPH)	350	350	350
RURAL	500	500	500
EXPRESSWAY/FREEWAY	1000	1500	2640

CASE NO. 32
TYPICAL APPLICATION *
ROUNDABOUT - OUTSIDE LANE CLOSURE FOR TWO-LANE ROUNDABOUT

Computer File Information	
Creation Date: 07/04/12	
Created By: Nakao	R-2
Last Modification Date: 01/14/26	R-1
Last Modified By: NRIVERA	
CAD Ver.: MicroStation V8 Scale: Not to Scale Units: English	

Sheet Revisions	
Date:	Comments
01/14/26	REMOVED G20-10/11 REVISED G20-5
01/20/23	Replaced R52-a(b) with R2-10(11) Updated G20-11 Added Drum/Vertical Panel Symbol

Colorado Department of Transportation
2829 W. Howard Pl.
Denver, CO 80204
Phone: 303-757-9654
FAX: 303-757-9219
Traffic Safety & Engineering EB

TRAFFIC CONTROLS FOR HIGHWAY CONSTRUCTION

Issued By: Traffic Safety & Engineering Branch July 31, 2019

STANDARD PLAN NO.
S-630-1
Standard Sheet No. 19 of 26
Project Sheet Number:

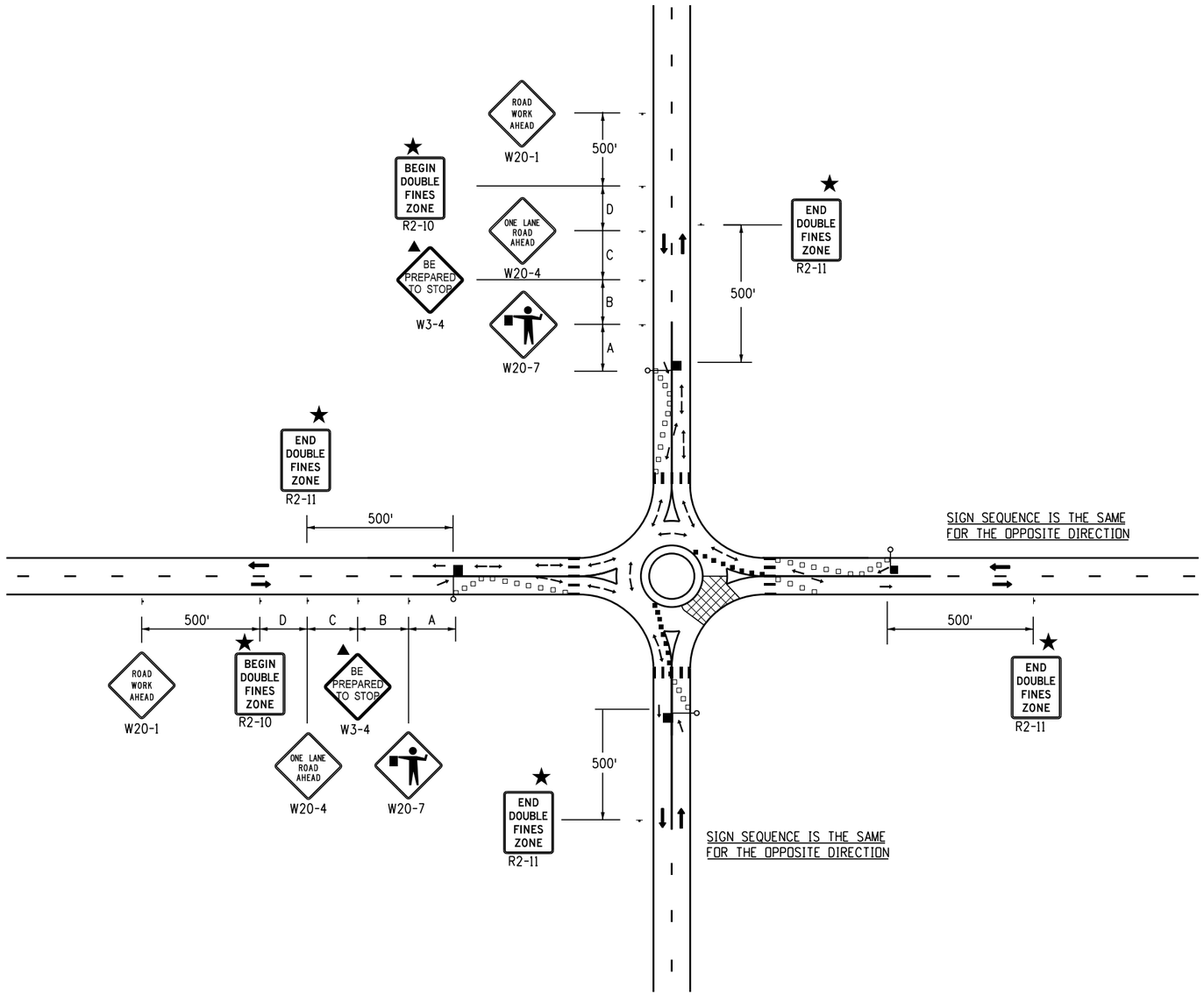

LEGEND

✳ A TRUCK DETOUR ROUTE MAY BE NECESSARY TO DIVERT TRUCKS AWAY FROM THE ROUNDABOUT CIRCLE. ALSO NECESSARY IS A STREET NAME AND/OR ROUTE NUMBER SIGN, INFORMING MOTORISTS WHERE THEY NEED TO EXIT THE ROUNDABOUT CIRCLE TO ENTER THE DESIRED STREET AND/OR ROUTE NUMBER.

■ CHANNELIZING DEVICE: FOR TYPE OF DEVICE TO BE USED, SEE THE SCHEDULE OF CONSTRUCTION TRAFFIC CONTROL DEVICES INCLUDED IN THE PLANS. IF PROJECT IS DESIGNATED AS A "SIGNIFICANT PROJECT" (SEE GENERAL NOTE 28), CONCRETE BARRIER SHALL BE USED FOR CHANNELIZATION DEVICES (TEMP) AS DETERMINED BY THE ENGINEER.

□ DRUMS OR VERTICAL PANELS SHALL BE USED TO DELINEATE MERGING TAPERS, SHIFTING TAPERS, AND ONE LANE, TWO-WAY TRAFFIC TAPERS.

TYPE III BARRICADE

DIRECTION OF TRAVEL

WORK AREA

ADVANCE WARNING FLASHING OR SEQUENCING ARROW PANEL.

▲ THESE DEVICES ARE OPTIONAL. THEIR NEED SHALL BE DETERMINED BY DETOUR DESIGN AND/OR SCOPE OF CONSTRUCTION ACTIVITY, AND ARE REQUIRED WHEN THEY ARE INCLUDED IN THE SCHEDULE OF CONSTRUCTION CONTROL DEVICES.

◆ THESE DEVICES ARE NOT OPTIONAL IF THE POSTED SPEED LIMIT IN THE WORK ZONE IS REDUCED.

FLASHING BEACON

⬢ REQUIRED WHEN WORK OCCUPIES THE LOCATION FOR MORE THAN 3 DAYS.

★ SEE FINES DOUBLE SIGNING NOTES ON SHEET 12.

MOBILE ATTENUATOR

L TRANSITION TAPER LENGTH:

L = MINIMUM LENGTH OF TAPER

SPEED 45 MPH OR MORE: $L = S \times W$

SPEED 40 MPH OR LESS: $L = \frac{WS^2}{60}$

S = NUMERICAL VALUE OF SPEED LIMIT OR 85 PERCENTILE SPEED

W = WIDTH OF OFFSET

SHOULDER TAPER = 1/3 L

BUFFER SPACE SEE GENERAL NOTE 23 ON SHEET 2.

FLAGGER STATION

ROAD TYPE	DISTANCE BETWEEN SIGNS		
	A	B	C
URBAN (<=40 MPH)	100	100	100
URBAN (>=45 MPH)	350	350	350
RURAL	500	500	500
EXPRESSWAY/FREEWAY	1000	1500	2640

CASE NO. 33
TYPICAL APPLICATION *
ROUNDABOUT - PARTIAL CLOSURE FOR ONE-LANE ROUNDABOUT

Computer File Information	
Creation Date: 07/04/12	
Created By: Nakao	
Last Modification Date: 01/14/26	
Last Modified By: NRIVERA	
CAD Ver.: MicroStation V8 Scale: Not to Scale Units: English	

	Sheet Revisions	
	Date:	Comments
R-2	1/14/26	REMOVED G20-10/11
R-1	01/20/23	Replaced R52-a(b) with R2-10(11) Updated G20-11 Added Drum/Vertical Panel Symbol

Colorado Department of Transportation
2829 W. Howard Pl.
Denver, CO 80204
Phone: 303-757-9654
FAX: 303-757-9219
Traffic Safety & Engineering EB

TRAFFIC CONTROLS FOR HIGHWAY CONSTRUCTION

Issued By: Traffic Safety & Engineering Branch July 31, 2019

STANDARD PLAN NO.
S-630-1
Standard Sheet No. 20 of 26
Project Sheet Number:

LEGEND

- MOBILE ATTENUATOR VEHICLE, TWO 360-DEGREE YELLOW FLASHING BEACONS, AND YELLOW FLASHING VEHICLE LIGHTS OR STROBES.
- VMS — VARIABLE MESSAGE SIGN (VMS).
- ARROW BOARD
- ▲ WHEN VMS IS USED, THE "RIGHT SHOULDER CLOSED" (W21-5a) SIGN BECOMES OPTIONAL.
- ● IF TRACKING OF THE WET PAINT IS ANTICIPATED, THE USE OF CONES OR STATIONARY "WET PAINT" SIGNS SHALL BE POSTED.
- ⬢ THE VARIABLE SEPARATION DISTANCE BETWEEN THE "CONE PLACEMENT VEHICLE" AND "CONE PICKUP VEHICLE" SHALL BE DETERMINED BY THE TRACK DRYING TIME OF THE PAVEMENT MARKING MATERIAL.
- ⬬ OPTIONAL

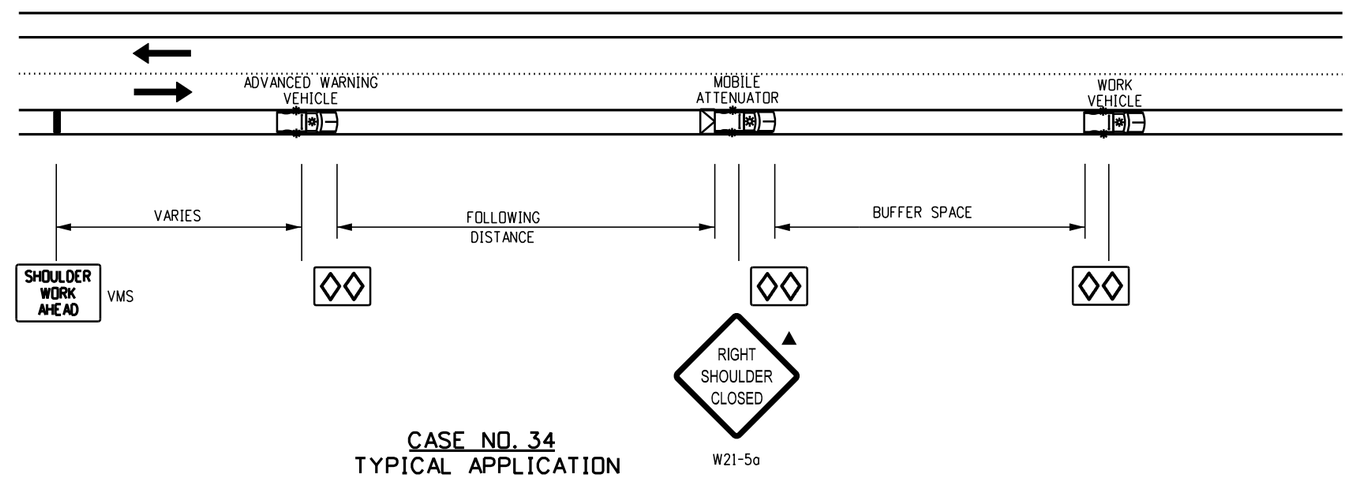

CASE NO. 34
TYPICAL APPLICATION
MOBILE WORK ZONE
MOBILE SHOULDER CLOSURE ON 2-LANE UNDIVIDED HIGHWAY

* USE CASE 35 IF SHOULDER IN CASE 34 IS TOO NARROW FOR GROUP VEHICLE USE.

FOLLOWING DISTANCE CHART FOR WARNING AND MOBILE ATTENUATOR (OR CONE PICKUP) VEHICLE

POSTED WZ SPEED LIMIT (MPH)	FOLLOWING DISTANCE (FEET)	BUFFER SPACE (FEET)
0 - 30	250 - 550	100 - 120
35 - 40	325 - 700	100 - 120
45 - 50	600 - 900	120 - 140
55	750 - 1200	120 - 140
60	1000 - 1400	180 - 200

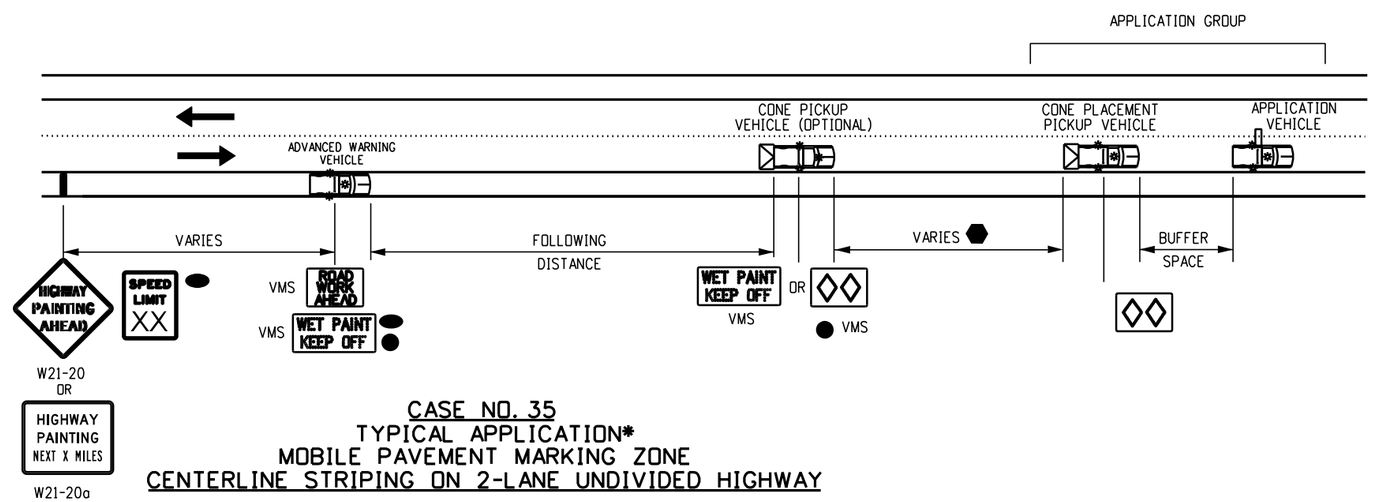

CASE NO. 35
TYPICAL APPLICATION*
MOBILE PAVEMENT MARKING ZONE
CENTERLINE STRIPING ON 2-LANE UNDIVIDED HIGHWAY

Computer File Information	
Creation Date: 07/04/12	
Created By: Nakao	R-2
Last Modification Date: 01/20/23	
Last Modified By: NRIVERA	R-1
CAD Ver.: MicroStation V8 Scale: Not to Scale Units: English	

Sheet Revisions	
Date:	Comments
01/20/23	UPDATED LEGEND DELETED NOTE UPDATED FOLLOWING DISTANCE CHART MOVED NOTE UNDER CASE 34
06/03/21	UPDATED FOR BUFFER SPACE.

Colorado Department of Transportation
2829 W. Howard Pl.
Denver, CO 80204
Phone: 303-757-9654
FAX: 303-757-9219
Traffic Safety & Engineering EB

TRAFFIC CONTROLS FOR HIGHWAY CONSTRUCTION

Issued By: Traffic Safety & Engineering Branch July 31, 2019

STANDARD PLAN NO.
S-630-1
Standard Sheet No. 21 of 26
Project Sheet Number:

FOR CASE #36, VEHICLE/SIGN SEQUENCE IS THE SAME FOR THE LEFT SIDE OF HIGHWAY, WHILE TAPER IS MIRRORED ABOUT THE CENTER LANE, WHEN MOBILE WORK ZONE IS LOCATED ON THE LEFT SIDE OF HIGHWAY.

LEGEND

- MOBILE ATTENUATOR VEHICLE, TWO 360-DEGREE YELLOW FLASHING BEACONS, AND YELLOW FLASHING VEHICLE LIGHTS OR STROBES.
- ADVANCE WARNING FLASHING OR SEQUENCING ARROW PANEL.
- VMS — VARIABLE MESSAGE SIGN (VMS).
- ARROW BOARD
- ▲ WHEN THE VMS IS USED, THE "SHOULDER CLOSED" W21-5a(R/L) AND "RAMP CLOSED AHEAD" W5-40 SIGNS BECOME OPTIONAL.
- ● IF TRACKING OF THE WET PAINT IS ANTICIPATED, THE USE OF CONES OR STATIONARY "WET PAINT" SIGNS SHALL BE POSTED.
- ⬢ THE VARIABLE SEPARATION DISTANCE BETWEEN THE "CONE PLACEMENT VEHICLE" AND "CONE PICKUP VEHICLE" SHALL BE DETERMINED BY THE TRACK DRYING TIME OF THE PAVEMENT MARKING MATERIAL.
- ⬬ OPTIONAL

NOTES

1. THE SIGNING VEHICLES MAY ENCROACH INTO THE TRAFFIC LANE WHEN THE SHOULDER IS TOO NARROW TO DRIVE ON.
2. IF THE RAMP CANNOT BE REOPENED WITHIN 15 MINUTES, USE CASE NO. 22 OF THE S-630-1 STANDARD PLAN.

FOLLOWING DISTANCE CHART FOR WARNING VEHICLE AND CONE PICKUP VEHICLES

POSTED WZ SPEED LIMIT (MPH)	FOLLOWING DISTANCE (FEET)	BUFFER SPACE (FEET)
0 - 30	250 - 550	100 - 120
35 - 40	325 - 700	100 - 120
45 - 50	600 - 900	120 - 140
55	750 - 1200	120 - 140
60	1000 - 1400	180 - 200

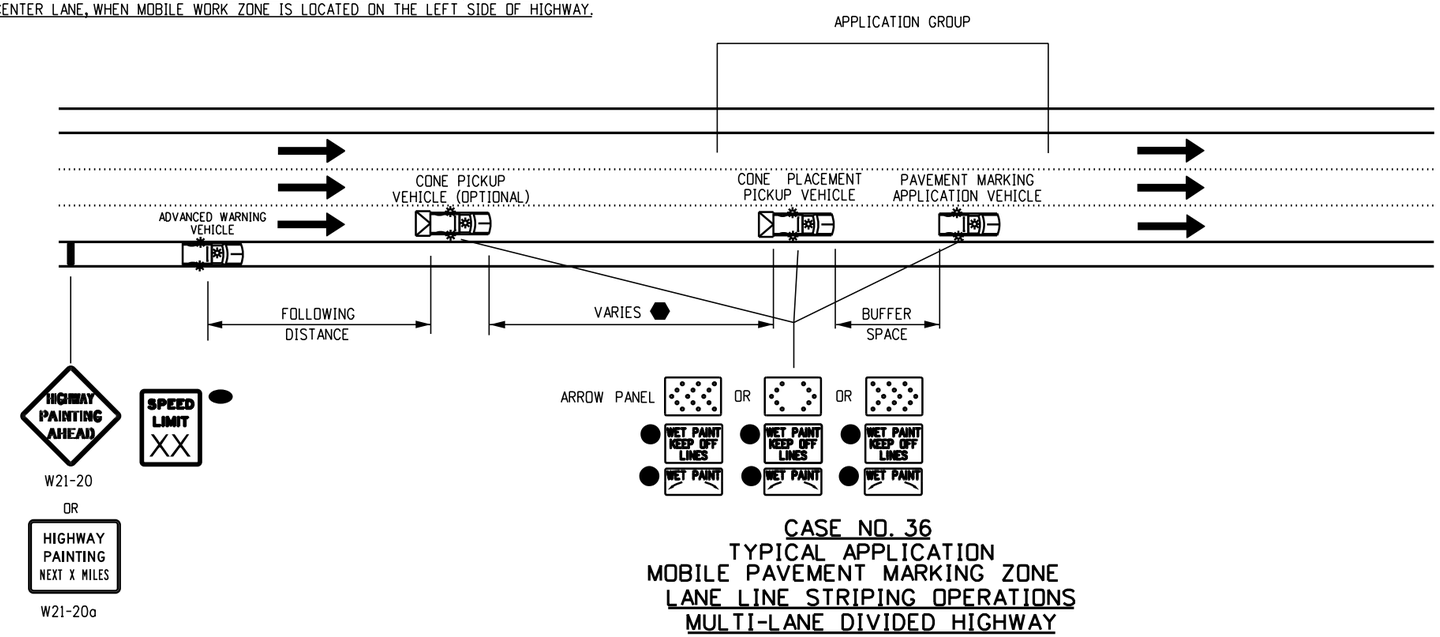

CASE NO. 36
TYPICAL APPLICATION
MOBILE PAVEMENT MARKING ZONE
LANE LINE STRIPING OPERATIONS
MULTI-LANE DIVIDED HIGHWAY

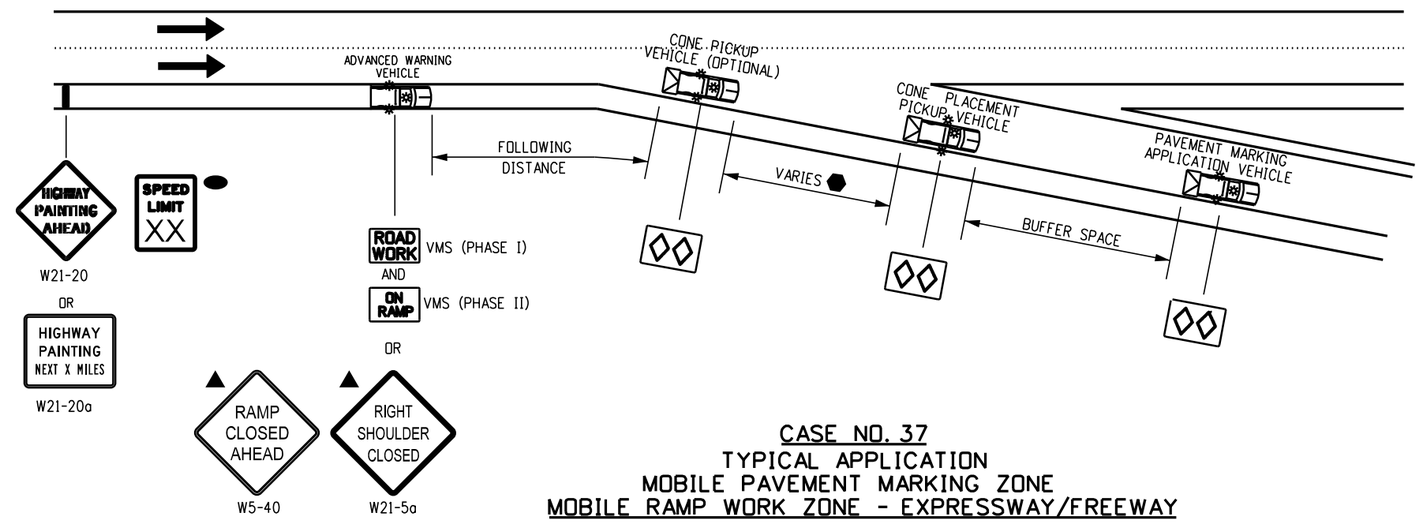

CASE NO. 37
TYPICAL APPLICATION
MOBILE PAVEMENT MARKING ZONE
MOBILE RAMP WORK ZONE - EXPRESSWAY/FREEWAY

Computer File Information	
Creation Date: 07/04/12	
Created By: Nakao	R-1
Last Modification Date: 01/20/23	
Last Modified By: NRIVERA	
CAD Ver.: MicroStation V8 Scale: Not to Scale Units: English	

Sheet Revisions	
Date:	Comments
01/20/23	UPDATED LEGEND UPDATED FOLLOWING DISTANCE CHART

Colorado Department of Transportation
2829 W. Howard Pl.
Denver, CO 80204
Phone: 303-757-9654
FAX: 303-757-9219
Traffic Safety & Engineering EB

TRAFFIC CONTROLS FOR HIGHWAY CONSTRUCTION

Issued By: Traffic Safety & Engineering Branch July 31, 2019

STANDARD PLAN NO.
S-630-1
Standard Sheet No. 22 of 26
Project Sheet Number:

LEGEND

MOBILE ATTENUATOR TRUCK, TWO 360-DEGREE YELLOW FLASHING BEACONS, AND YELLOW FLASHING VEHICLE LIGHTS OR STROBES.

ADVANCE WARNING FLASHING OR SEQUENCING ARROW PANEL.

▲ WHEN THE VMS IS USED, THE "RIGHT LANE CLSED AHEAD" W9-3(R/L) SIGN BECOMES OPTIONAL.

■ THE "CONE PICK UP VEHICLE" OR "WARNING VEHICLE" MAY ENCROACH INTO THE TRAFFIC LANE WHEN THE SHOULDER IS TOO NARROW TO DRIVE ON.

NOTES

1. IN ROADWAY WHERE THE AADT IS 2,000 OR LESS, A SINGLE WORK VEHICLE WITH APPROPRIATE WARNING DEVICES ON THE VEHICLE MAY BE USED.
2. RADIO COMMUNICATIONS BETWEEN THE WORKCREW AND THE MOVING BLOCKADE ARE REQUIRED TO ADJUST THE BLOCKADE TO INCREASE OR DECREASE THE CLOSURE TIME. RELEASE TRAFFIC ONLY AFTER CONFIRMATION THAT ALL WORKERS AND THEIR VEHICLES ARE CLEAR OF THE ROADWAY.
3. IF APPLICABLE, ALL RAMPS AND ACCESS BETWEEN THE MOVING BLOCKADE AND WORK OPERATION AREA SHALL BE TEMPORARILY CLOSED USING TRAFFIC CONTROL EQUIPMENT AND PERSONNEL. EACH RAMP MUST REMAIN CLOSED UNTIL THE CREW DOING THE WORK GIVES THE "ALL CLEAR" SIGNAL OR UNTIL THE FRONT OF THE MOVING BLOCKADE PASSES THE CLOSED RAMP(S).

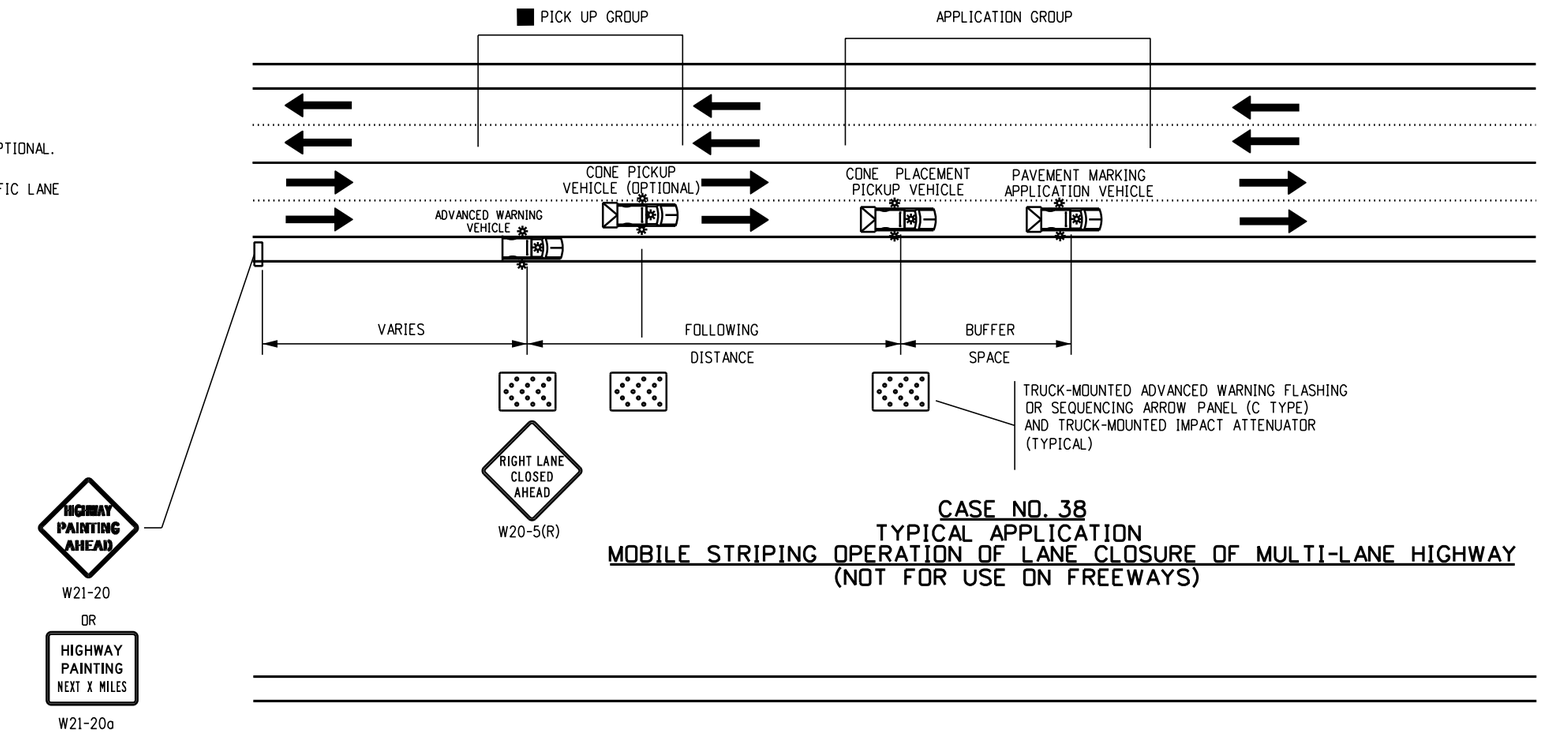

CASE NO. 38
TYPICAL APPLICATION
MOBILE STRIPING OPERATION OF LANE CLOSURE OF MULTI-LANE HIGHWAY
(NOT FOR USE ON FREEWAYS)

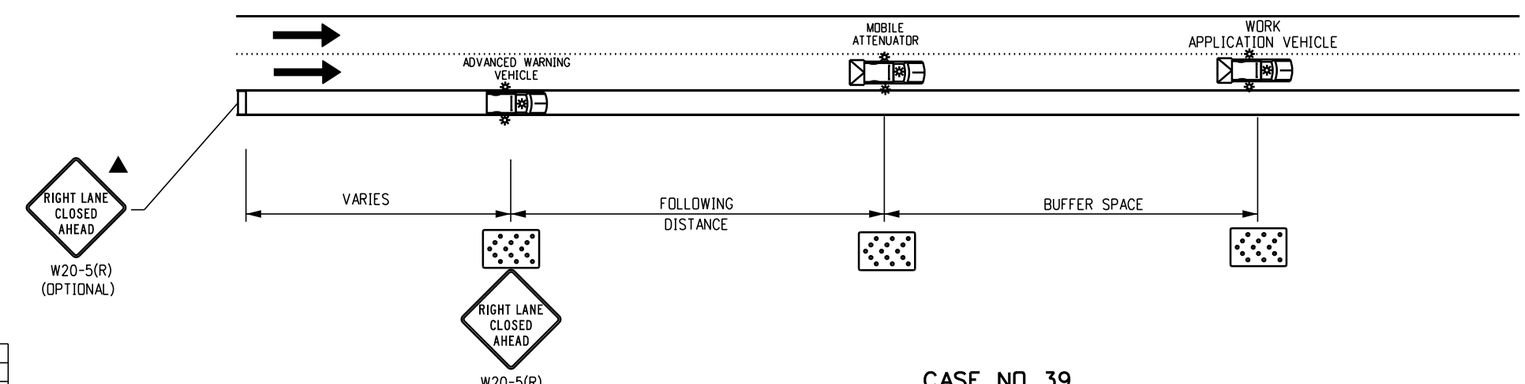

CASE NO. 39
TYPICAL APPLICATION
MOBILE OPERATION OF LANE CLOSURE OF MULTI-LANE HIGHWAY

FOLLOWING DISTANCE CHART FOR WARNING VEHICLE AND SIGNING VEHICLES

POSTED WZ SPEED LIMIT (MPH)	FOLLOWING DISTANCE (FEET)	BUFFER SPACE (FEET)
0 - 30	250 - 550	100 - 120
35 - 40	325 - 700	100 - 120
45 - 50	600 - 900	120 - 140
55	750 - 1200	120 - 140
60	1000 - 1400	180 - 200

Computer File Information		Sheet Revisions	
Creation Date: 07/04/12		Date:	Comments
Created By: Nakao	R-1	01/14/26	REVISED G20-5(R)
Last Modification Date: 01/14/26	R-1	01/20/23	UPDATED LEGEND UPDATED FOLLOWING DISTANCE CHART
Last Modified By: NRIVERA			
CAD Ver.: MicroStation V8 Scale: Not to Scale Units: English			

Colorado Department of Transportation
2829 W. Howard Pl.
Denver, CO 80204
Phone: 303-757-9654
FAX: 303-757-9219
Traffic Safety & Engineering EB

TRAFFIC CONTROLS FOR HIGHWAY CONSTRUCTION

Issued By: Traffic Safety & Engineering Branch July 31, 2019

STANDARD PLAN NO.
S-630-1
Standard Sheet No. 23 of 26
Project Sheet Number:

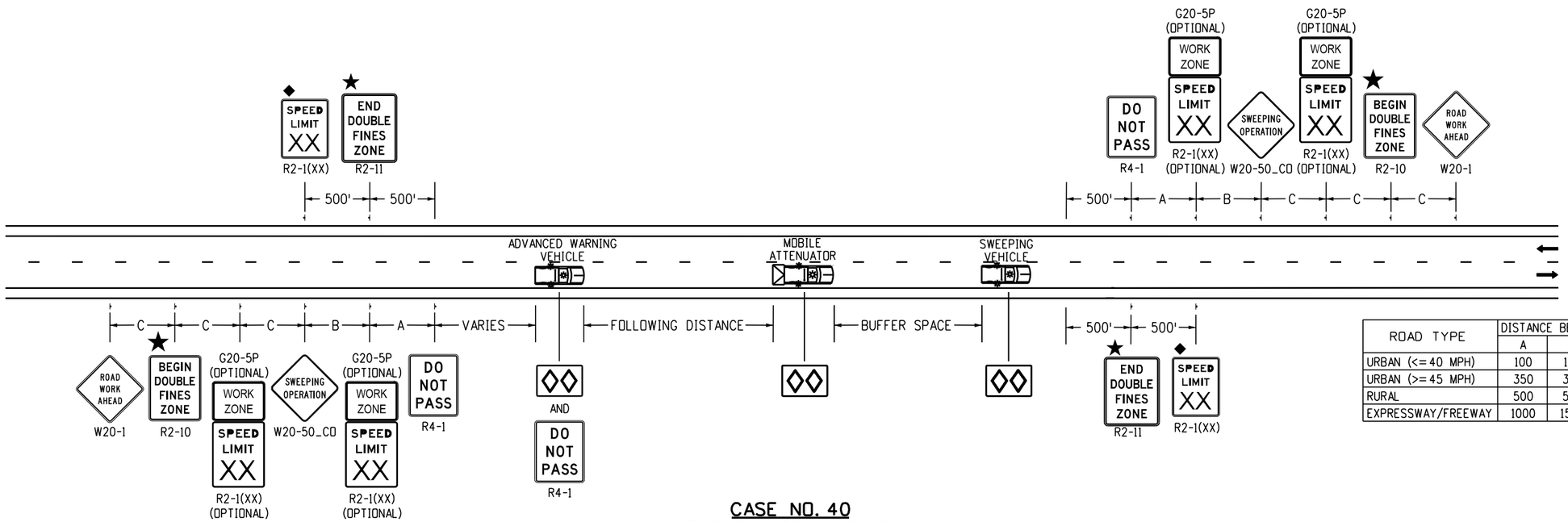

ROAD TYPE	DISTANCE BETWEEN SIGNS		
	A	B	C
URBAN (<=40 MPH)	100	100	100
URBAN (>=45 MPH)	350	350	350
RURAL	500	500	500
EXPRESSWAY/FREEWAY	1000	1500	2640

CASE NO. 40
TYPICAL APPLICATION
MOBILE SWEEPING OPERATION 1 MILE OR LESS

FOLLOWING DISTANCE CHART FOR WARNING AND MOBILE ATTENUATOR (OR SWEEPING) VEHICLE

POSTED WZ SPEED LIMIT (MPH)	FOLLOWING DISTANCE (FEET)	BUFFER SPACE (FEET)
0 - 30	250 - 550	100 - 120
35 - 40	325 - 700	100 - 120
45 - 50	600 - 900	120 - 140
55	750 - 1200	120 - 140
60	1000 - 1400	180 - 200

SPEED REDUCTION CHART (SEE GENERAL NOTE 3)			
EXISTING POSTED SPEED	FIRST WORK ZONE SPEED	SECOND WORK ZONE SPEED	SPEED AFTER WORK ZONE
75 MPH	60 MPH	45 MPH	75 MPH
70 MPH	55 MPH	40 MPH	70 MPH
65 MPH	50 MPH	40 MPH	65 MPH
60 MPH	45 MPH	40 MPH	60 MPH
55 MPH	40 MPH	N/A	55 MPH
50 MPH	40 MPH	N/A	50 MPH
45 MPH	40 MPH	N/A	45 MPH

LEGEND

- MOBILE ATTENUATOR VEHICLE, TWO 360-DEGREE YELLOW FLASHING BEACONS, AND YELLOW FLASHING VEHICLE LIGHTS OR STROBES.
- ARROW BOARD
- ◆ THESE DEVICES ARE NOT OPTIONAL IF THE POSTED SPEED LIMIT IN THE WORK ZONE IS REDUCED.
- ★ SEE FINES DOUBLE SIGNING NOTES ON SHEET 12.

Computer File Information
Creation Date: 01/20/23
Created By: AVU
Last Modification Date: 04/30/24
Last Modified By: NRIVERA
CAD Ver.: MicroStation V8 Scale: Not to Scale Units: English

Sheet Revisions		
	Date:	Comments
R-1	04/30/24	REMOVED G20-11 AND G20-10

Colorado Department of Transportation
2829 W. Howard Pl.
Denver, CO 80204
Phone: 303-757-9654
FAX: 303-757-9219
Traffic Safety & Engineering EB

TRAFFIC CONTROLS FOR HIGHWAY CONSTRUCTION

Issued By: Traffic Safety & Engineering Branch July 31, 2019

STANDARD PLAN NO.
S-630-1
Standard Sheet No. 24 of 26
Project Sheet Number:

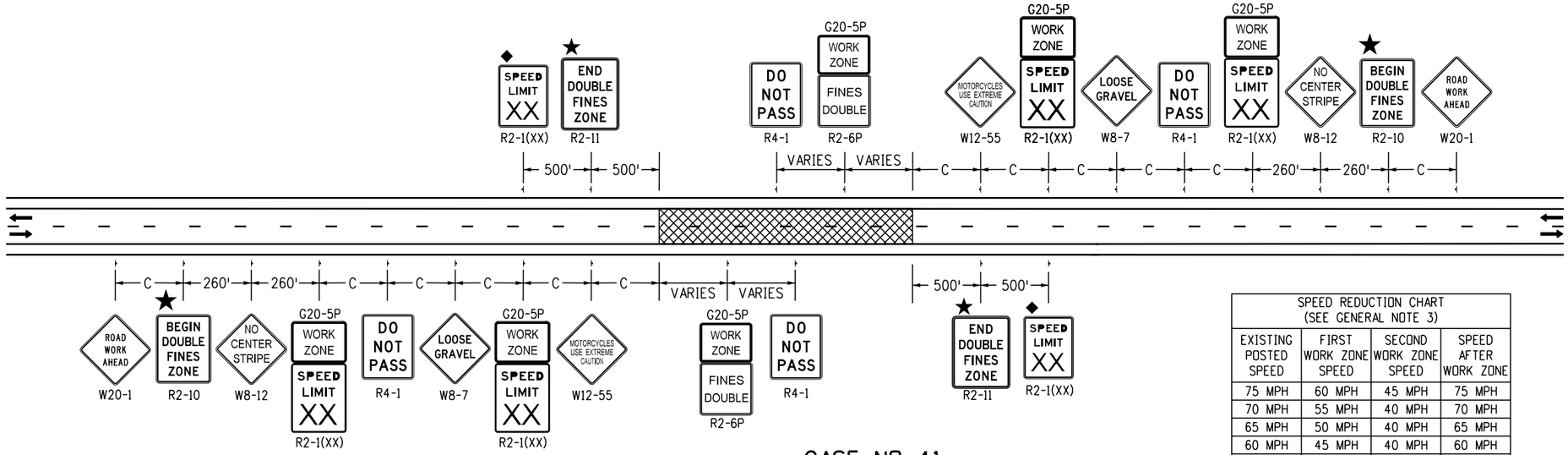

CASE NO. 41

TYPICAL APPLICATION

CHIP SEALS - 2-LANE UNDIVIDED HIGHWAY

NOTE: FOLLOW APPLICABLE STANDARDS AS SHOWN IN CASE NO. 17 ON SHEET 9, CASE NO. 19 ON SHEET 10, AND CHAPTER 6H OF THE 2009 MUTCD FOR LANE CLOSURE IN WORK AREA.

SIGNING MAY STAY WHILE LANES ARE REOPENED.

SPEED REDUCTION CHART (SEE GENERAL NOTE 3)			
EXISTING POSTED SPEED	FIRST WORK ZONE SPEED	SECOND WORK ZONE SPEED	SPEED AFTER WORK ZONE
75 MPH	60 MPH	45 MPH	75 MPH
70 MPH	55 MPH	40 MPH	70 MPH
65 MPH	50 MPH	40 MPH	65 MPH
60 MPH	45 MPH	40 MPH	60 MPH
55 MPH	40 MPH	N/A	55 MPH
50 MPH	40 MPH	N/A	50 MPH
45 MPH	40 MPH	N/A	45 MPH

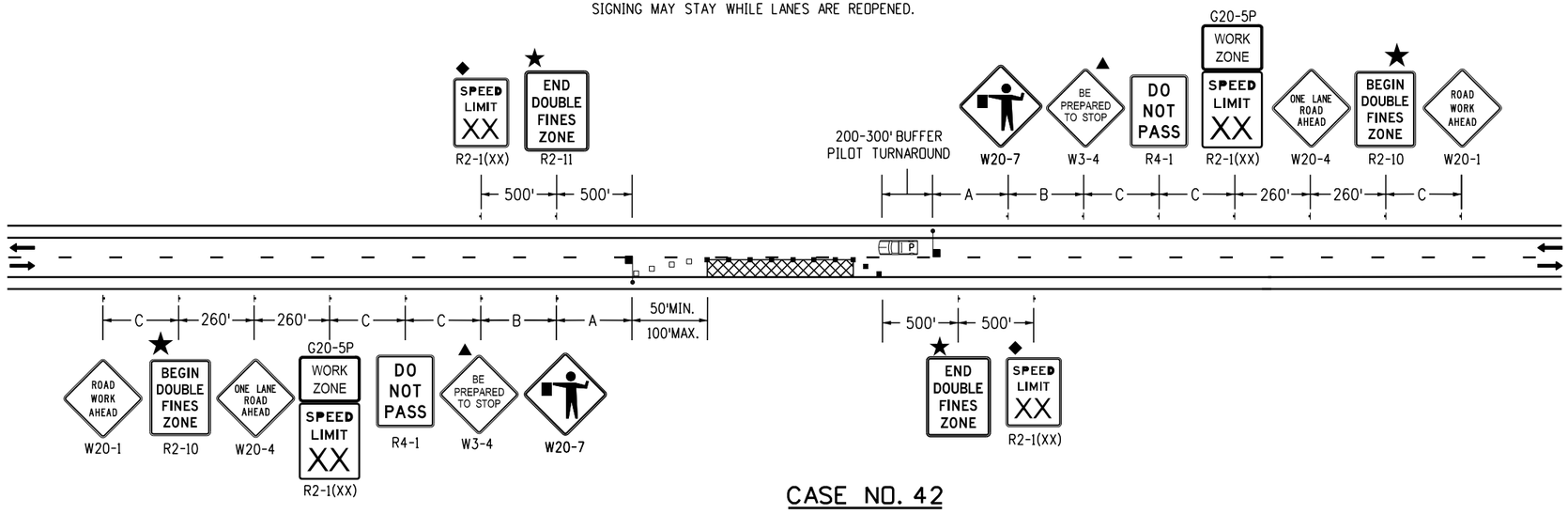

CASE NO. 42

TYPICAL APPLICATION

PILOT CAR - LANE CLOSURE, 2-LANE UNDIVIDED HIGHWAY

NOTES

1. ALL NIGHT HAZARDS WILL BE MARKED AND DELINEATED.
2. ALL SPEED LIMIT SIGNS CONFLICTING WITH WORK ZONE SPEED SHALL BE COVERED DURING SPEED REDUCTION.

LEGEND

- ■ CHANNELIZING DEVICE: FOR TYPE OF DEVICE TO BE USED, SEE SCHEDULE OF TRAFFIC CONTROL DEVICES INCLUDED IN THE PLANS.
- ▫ DRUMS OR VERTICAL PANELS SHALL BE USED TO DELINEATE MERGING TAPERS, SHIFTING TAPERS, AND ONE LANE, TWO-WAY TRAFFIC TAPERS.
- FLAGGER STATION
- DIRECTION OF TRAVEL
- WORK AREA
- L TRANSITION TAPER LENGTH:
  - L = MINIMUM LENGTH OF TAPER
  - SPEED 45 MPH OR MORE: $L = S \times W$
  - SPEED 40 MPH OR LESS: $L = \frac{WS^2}{60}$
  - S = NUMERICAL VALUE OF SPEED LIMIT OR 85 PERCENTILE SPEED
  - W = WIDTH OF OFFSET
  - SHOULDER TAPER = 1/3 L
- ▲ THESE DEVICES ARE OPTIONAL. THEIR NEED SHALL BE DETERMINED BY DETOUR DESIGN AND/OR SCOPE OF CONSTRUCTION ACTIVITY, AND ARE REQUIRED WHEN THEY ARE INCLUDED IN THE SCHEDULE OF CONSTRUCTION CONTROL DEVICES.
- ◆ THESE DEVICES ARE NOT OPTIONAL IF THE POSTED SPEED LIMIT IN THE WORK ZONE IS REDUCED.
- VARIES BUFFER SPACE (SEE GENERAL NOTE 23 ON SHEET 2).
- PILOT CAR
- ★ SEE FINES DOUBLE SIGNING NOTES ON SHEET 12.

KEY TO ADVANCE SIGNING DISTANCES

ROAD TYPE	DISTANCE BETWEEN SIGNS		
	A	B	C
URBAN (<=40 MPH)	100	100	100
URBAN (>=45 MPH)	350	350	350
RURAL	500	500	500
EXPRESSWAY/FREEWAY	1000	1500	2640

Computer File Information	
Creation Date: 06/03/21	
Created By: AVU	R-2
Last Modification Date: 01/14/26	R-1
Last Modified By: NRIVERA	
CAD Ver.: MicroStation V8 Scale: Not to Scale Units: English	

Sheet Revisions	
Date:	Comments
01/14/26	REMOVED G20-10/11
07/20/23	ADDED G20-5P SIGN TO SHEET UPDATED NOTE UNDER CASE NO.41 UPDATED SIGN SPACINGS UPDATED FLAGGER TAPER LENGTH

Colorado Department of Transportation
2829 W. Howard Pl.
Denver, CO 80204
Phone: 303-757-9654
FAX: 303-757-9219
Traffic Safety & Engineering EB

TRAFFIC CONTROLS FOR HIGHWAY CONSTRUCTION

Issued By: Traffic Safety & Engineering Branch July 31, 2019

STANDARD PLAN NO.
S-630-1
Standard Sheet No. 25 of 26
Project Sheet Number:

TYPICAL CONSTRUCTION ZONE SIGNS

THESE SIGNING NOTES ARE INTENDED AS A QUICK REFERENCE FOR TYPICAL SIGN USE AND PLACEMENT IN CONSTRUCTION ZONES.

G20-1 "ROAD/WORK/NEXT XX MILES" - THIS SIGN SHALL BE ERECTED AT THE LIMITS OF ANY ROAD CONSTRUCTION OR MAINTENANCE PROJECT OF MORE THAN TWO (2) MILES IN LENGTH WHERE TRAFFIC IS MAINTAINED THROUGH THE PROJECT.

G20-4 "PILOT CAR/FOLLOW ME" - THIS SIGN SHALL BE MOUNTED IN A CONSPICUOUS POSITION ON THE REAR OF A VEHICLE USED FOR GUIDING ONE-WAY TRAFFIC THROUGH OR AROUND THE PROJECT.

G20-5P "WORK ZONE" - THIS PLAQUE SHALL BE MOUNTED JUST ABOVE THE WORK ZONE SPEED LIMIT SIGNS PRIOR TO THE WORK ZONE AREA.

G20-55(X) "X MINUTE CLOSURE. EXPECT DELAYS" - THIS SIGN IS INTENDED FOR USE 500 FEET PAST THE "WORK ZONE"/SPEED LIMIT SIGN.

M4-9( ) "DETOUR/<<<<" - THIS SIGN IS USED FOR UNNUMBERED ROUTES; FOR USE IN EMERGENCY SITUATIONS; FOR PERIODS OF SHORT DURATION; OR WHERE, OVER RELATIVELY SHORT DISTANCES. IT IS NOT NECESSARY TO SHOW ROUTE MARKERS TO GUIDE TRAFFIC ALONG THE DETOUR AND BACK TO ITS AUTHORIZED ROUTE.

M4-10( ) "DETOUR ARROW" - THIS SIGN SHOULD BE MOUNTED JUST BELOW THE ROAD CLOSED SIGN AT THE POINT WHERE THE DETOUR ROADWAY OR ROUTE HAS BEEN ESTABLISHED DUE TO THE CLOSURE OF THE STREET OR HIGHWAY TO THROUGH TRAFFIC.

R2-1( ) "SPEED/LIMIT/XX" - THESE SIGNS ARE INTENDED TO REDUCE TRAFFIC SPEED IN ADVANCE OF THE DAILY WORK AREA WITHIN THE OVERALL PROJECT LIMITS.

R2-1(XX) "SPEED/LIMIT/XX" - THIS SIGN IS INTENDED FOR USE 500 FEET PAST THE "THANK YOU" SIGN TO BRING TRAFFIC BACK TO ORIGINAL POSTED SPEED.

R2-6P "FINES DOUBLE" - THIS SIGN IS INTENDED FOR USE WITHIN WORK ZONES TO PROVIDE NOTICE OF INCREASED FINES FOR TRAFFIC VIOLATIONS WITHIN WORK ZONES.

R4-1 "DO NOT PASS" - THIS SIGN SHOULD BE PLACED AT TRANSITION TAPER POINT.

R4-2 "PASS WITH CARE" - THIS SIGN SHOULD BE PLACED AT TRANSITION TAPER POINT.

R2-10 "BEGIN DOUBLE FINES ZONE" SIGN IS PLACED AT THE BEGINNING OF THE ADVANCED WARNING AREA OF THE TRAFFIC CONTROL ZONE.

R2-11 "END DOUBLE FINES ZONE" SIGN IS PLACED AFTER WORK ZONE AREA, PAST DOWNSTREAM TAPER SECTION.

R11-2 "ROAD/CLOSED" - THIS SIGN IS TO BE MOUNTED ON THE BARRICADE THAT IS PLACED BEFORE THE WORK ZONE ENTRANCE TO PROHIBIT TRAFFIC FROM ENTERING THE WORK ZONE.

R11-3 "ROAD CLOSED/X MILES AHEAD/L.T.O." - THIS SIGN SHOULD BE PLACED WHERE THROUGH TRAFFIC MUST DETOUR TO AVOID THE CLOSURE OF THE ROAD SOME DISTANCE BEYOND, BUT WHERE THE ROAD IS OPEN TO LOCAL TRAFFIC UP TO THE POINT OF CLOSURE.

R11-4 "ROAD CLOSED/TO/THRU TRAFFIC" FOR URBAN USE - THIS SIGN SHOULD BE PLACED WHERE THROUGH TRAFFIC MUST DETOUR TO AVOID THE CLOSURE OF THE ROAD SOME DISTANCE BEYOND, BUT WHERE THE ROAD IS OPEN TO LOCAL TRAFFIC UP TO THE POINT OF CLOSURE.

R22-2 "TURN OFF/2-WAY RADIOS/AND/CELLULAR/PHONES" - THIS SIGN IS TO BE USED IN SEQUENCE WITH THE W22-1 AND W22-3 SIGNS AND PLACED AT LEAST 1000 FEET FROM THE BEGINNING OF THE BLASTING ZONE.

W1-1( ) "TURN ARROW" - THIS SIGN IS INTENDED FOR USE WHERE ENGINEERING INVESTIGATIONS OF ROADWAY CONDITIONS SHOW THE RECOMMENDED SPEED ON THE TURN TO BE 30 MPH OR LESS. ✱

W1-2( ) "CURVE ARROW" - THIS SIGN IS INTENDED FOR USE WHERE ENGINEERING INVESTIGATIONS OF ROADWAY CONDITIONS SHOW THE RECOMMENDED SPEED ON THE CURVE TO BE IN THE RANGE BETWEEN 30 AND 60 MILES PER HOUR. ✱

W1-3( ) "REVERSE TURN ARROW" - THIS SIGN IS INTENDED FOR USE WHERE TWO TURNS OR THE CURVE AND A TURN IN OPPOSITE DIRECTIONS ARE SEPARATED BY A TANGENT OF LESS THAN 600 FEET. ✱

W1-4( ) "REVERSE CURVE ARROW" - THIS SIGN IS INTENDED FOR USE WHERE TWO CURVES IN OPPOSITE DIRECTIONS ARE SEPARATED BY A TANGENT OF LESS THAN 600 FEET. ✱

W1-6( ) "ARROW" - THIS SIGN SHOULD BE MOUNTED JUST BELOW THE ROAD CLOSED SIGN AT THE POINT WHERE THE DIVERSION HAS BEEN ESTABLISHED DUE TO THE LANE CLOSURE.

W3-2 "YIELD AHEAD" - THIS SIGN IS INTENDED FOR USE AT THE APPROACH TO THE YIELD SIGN THAT IS NOT VISIBLE FOR A SUFFICIENT DISTANCE TO PERMIT THE DRIVER TO BRING HIS VEHICLE TO A STOP AT THE YIELD SIGN. ✱

W3-4 "BE PREPARED TO STOP" - THIS SIGN TO BE PLACED IN ADVANCE OF A FLAGGER.

W4-2(X) "LEFT (RIGHT) LANE TRANSITION SYMBOL" - THIS SIGN IS INTENDED FOR USE IN ADVANCE OF THE REDUCTION IN THE NUMBER OF TRAFFIC LANES IN THE DIRECTION OF TRAVEL ON THE MULTILANE HIGHWAY. ✱

W4-50 "USE BOTH LANES DURING CONGESTION" - THIS SIGN IS INTENDED FOR USE IN ADVANCE OF THE "ROAD WORK X MILE" ADVANCED WARNING SIGN.

W4-51 "USE BOTH LANES TO MERGE POINT" - THIS SIGN IS INTENDED TO DIRECT MOTORISTS TO USE BOTH TRAVEL LANES UNTIL THE LANES ARE REDUCED TO ONE LANE.

W4-52 "TAKE TURNS MERGE HERE" - THIS SIGN IS INTENDED TO WARN MOTORISTS IN ADVANCED TO MOVE FROM THE CLOSED TRAVEL LANE TO THE OPEN TRAVEL LANE, USUALLY 500 FEET IN ADVANCED OF THE START OF THE TRANSITION TAPER .

W5-1 "ROAD NARROWS" - THIS SIGN IS INTENDED FOR USE IN ADVANCE OF THE TRANSITION ON THE ROAD WHERE THE PAVEMENT WIDTH IS REDUCED ABRUPTLY TO A WIDTH SUCH THAT TWO CARS CANNOT PASS WITHOUT REDUCING SPEED. ✱

W5-2a "NARROW BRIDGE SYMBOL" - THIS SIGN IS INTENDED FOR USE IN ADVANCE OF A BRIDGE OR CULVERT HAVING A CLEAR TWO-WAY ROADWAY WIDTH OF 16 TO 18 FEET OR ANY BRIDGE OR CULVERT HAVING A ROADWAY CLEARANCE LESS THAN THE WIDTH OF THE APPROACH PAVEMENT. ✱

W5-3 "ONE LANE/BRIDGE" - THIS SIGN SHOULD BE PLACED ON TWO-WAY ROADWAYS IN ADVANCE OF THE BRIDGES OR CULVERTS WHERE THE ROADWAY WIDTH IS LESS THAN 16 FEET (18 FEET FOR COMMERCIAL VEHICLES) OR WHEN THE ALIGNMENT IS POOR ON THE APPROACH TO THE STRUCTURE HAVING A CLEAR ROADWAY WIDTH OF 18 FEET OR LESS. ✱

W6-1 "DIVIDED HIGHWAY SYMBOL" - THIS SIGN SHOULD BE PLACED ON THE APPROACHES TO THE SECTION OF HIGHWAY WHERE OPPOSING FLOWS OF TRAFFIC ARE SEPARATED BY A PHYSICAL MEDIAN.

W6-2 "DIVIDED HIGHWAY ENDS SYMBOL" - THIS SIGN SHOULD BE PLACED AT THE END OF THE SECTION OF PHYSICALLY DIVIDED HIGHWAY AS A WARNING OF TWO-WAY TRAFFIC AHEAD.

W6-3 "TWO-WAY TRAFFIC SYMBOL" - THIS SIGN IS INTENDED FOR USE TO GIVE WARNING OF TRANSITION FROM A SEPARATED ONE-WAY ROADWAY TO A TWO-WAY ROADWAY. ✱

W7-1 "HILL SYMBOL" - THIS SIGN SHOULD BE PLACED AT A POINT IN ADVANCE OF THE DOWNGRADE WHERE THE LENGTH, PERCENT OF GRADE, HORIZONTAL CURVATURE, OR OTHER PHYSICAL FEATURES REQUIRE SPECIAL CONSIDERATION ON THE PART OF DRIVERS. ✱

W8-1,W8-2 "BUMP"/"DIP" - THESE SIGNS ARE INTENDED FOR USE TO GIVE WARNING OF A SHARP RISE OR DEPRESSION IN THE PROFILE OF THE ROAD THAT IS SUFFICIENTLY ABRUPT TO AFFECT VEHICLE OPERATION OR CAUSE CONSIDERABLE DISCOMFORT TO PASSENGERS. ✱

W8-3a "PAVEMENT ENDS SYMBOL" - THIS SIGN IS INTENDED FOR USE IN ADVANCE OF A POINT WHERE THE PAVEMENT SURFACE CHANGES FROM A HARD-SURFACED PAVEMENT TO THE LOW-TYPE SURFACE OR EARTH ROAD. ✱

W8-4 "SOFT SHOULDER" - THIS SIGN IS INTENDED FOR USE TO WARN OF A SOFT SHOULDER CONDITION THAT COULD PRESENT A PROBLEM TO VEHICLES THAT MAY GET OFF THE PAVEMENT. ✱

W8-5 "SLIPPERY WHEN WET SYMBOL" - THIS SIGN SHOULD BE PLACED IN ADVANCE OF THE CONDITION WHERE THE HIGHWAY SURFACE IS SLIPPERY BEYOND WHAT IS ORDINARY WHEN WET. ✱

W8-9a "SHOULDER DROP-OFF" - THIS SIGN IS INTENDED FOR USE IN ADVANCE OF A SHOULDER DROP-OFF THAT EXCEEDS THREE INCHES IN HEIGHT. ✱

W8-11 "UNEVEN LANES" - THIS SIGN IS INTENDED FOR USE IN ADVANCE OF AN UNEVEN ADJACENT LANE SITUATION THAT EXCEEDS ONE INCH IN HEIGHT. ✱

W9-1( ) "LEFT (RIGHT) LANE ENDS" - THIS SIGN IS INTENDED FOR USE IN ADVANCE OF THE PAVEMENT WIDTH TRANSITION SIGN (W4-2).

W9-2( ) "LANE ENDS/MERGE LEFT (RIGHT)" - THIS SIGN IS INTENDED FOR USE AS A SUPPLEMENT TO THE PAVEMENT WIDTH TRANSITION SIGN (W4-2).

W9-3 "CENTER LANE CLOSED AHEAD SYMBOL" - THIS SIGN SHOULD BE USED IN ADVANCE OF THE POINT WHERE WORK OCCUPIES THE CENTER LANE AND TRAFFIC IS DIRECTED TO THE RIGHT OR LEFT OF THE WORK ZONE. ✱

W12-1 "DOUBLE ARROW SYMBOL" - THIS SIGN SHOULD BE PLACED AT THE POINT OF THE OBSTRUCTION IN THE ROADWAY, WHERE TRAFFIC IS PERMITTED TO PASS ON EITHER SIDE OF THE OBSTRUCTION.

W12-2 "LOW CLEARANCE SYMBOL" - THIS SIGN IS INTENDED FOR USE IN ADVANCE OF AN OBSTRUCTION TO WARN VEHICLE OPERATORS OF CLEARANCES LESS THAN THE MAXIMUM VEHICLE HEIGHT PERMITTED PLUS 12 INCHES. ✱

W13-1P( ) "ADVISORY SPEED PLAQUE" - THIS PLAQUE IS INTENDED TO SUPPLEMENT WARNING SIGNS ONLY AND SHALL NOT BE MOUNTED ALONE. IT IS USED TO INDICATE THE MAXIMUM RECOMMENDED SPEED FOR THE INDICATED CONDITION.

W13-3 "ADVISORY RAMP SPEED" - THIS SIGN IS TO BE POSTED TO INFORM MOTORISTS WHAT THE SUGGESTED SPEED LIMIT IS ON A RAMP.

W20-1 "ROAD/WORK/AHEAD" - THIS SIGN IS TO BE LOCATED IN ADVANCE OF THE INITIAL ACTIVITY OR DETOUR A DRIVER MAY ENCOUNTER, AND IS INTENDED TO BE USED AS A WARNING OF OBSTRUCTIONS OR RESTRICTIONS.

W20-2 "DETOUR/(DIST.)" - THIS SIGN IS INTENDED FOR USE IN ADVANCE OF THE POINT AT WHICH TRAFFIC IS DIVERTED OVER A TEMPORARY ROADWAY OR ROUTE.

W20-3 "ROAD/CLOSED/(DIST.)" - THIS SIGN IS INTENDED FOR USE IN ADVANCE OF A POINT AT WHICH A ROADWAY IS CLOSED TO ALL TRAFFIC OR TO ALL BUT LOCAL TRAFFIC.

W20-4 "ONE LANE/ROAD/(DIST.)" - THIS SIGN IS INTENDED FOR USE IN ADVANCE OF A POINT WHERE TRAFFIC IN BOTH DIRECTIONS MUST USE A SINGLE LANE.

W20-5( ) "XXX LANE/CLOSED/(DIST.)" - THIS SIGN IS INTENDED FOR USE IN ADVANCE OF A POINT WHERE ONE LANE OF A MULTIPLE-LANE ROADWAY IS CLOSED. IT SHOULD BE PROVIDED WITH INTERCHANGEABLE PLAQUES READING "RIGHT", "LEFT", AND "CENTER" AT NO ADDITIONAL COST TO THE PROJECT.

W20-7 "FLAGGER SYMBOL" - THIS SIGN IS INTENDED FOR USE IN ADVANCE OF ANY POINT AT WHICH A FLAGGER HAS BEEN STATIONED TO CONTROL TRAFFIC THROUGH OR AROUND THE PROJECT. ✱

W20-52 "GROOVED/PAVEMENT/AHEAD" - THIS SIGN IS INTENDED TO BE USED IN ADVANCE OF A ROADWAY THAT HAS BEEN GROOVED AND/OR ROTO MILLED.

W21-1a "WORKER SYMBOL" - THIS SIGN IS INTENDED FOR USE IN CONJUNCTION WITH MINOR MAINTENANCE AND PUBLIC UTILITY OPERATIONS FOR THE PROTECTION OF MEN WORKING IN OR NEAR THE ROADWAY.

W21-2 "FRESH/OIL" - THIS SIGN IS INTENDED FOR USE WHERE RE-SURFACING OPERATIONS HAVE RENDERED THE SURFACE OF THE PAVEMENT TEMPORARILY WET, AND OBJECTIONABLE SPLASHING ON VEHICLES MAY OCCUR. ✱

W21-3 "ROAD/MACHINERY/AHEAD" - THIS SIGN IS INTENDED FOR USE IN ADVANCE OF THE AREAS WHERE HEAVY EQUIPMENT IS OPERATING IN OR ADJACENT TO THE ROADWAY. ✱

W21-4 "ROAD/WORK/(DIST.)" - THIS SIGN IS INTENDED FOR USE IN ADVANCE OF MAINTENANCE FOR MINOR RECONSTRUCTION OPERATIONS IN THE ROADWAY.

W21-5 "SHOULDER/WORK" - THIS SIGN IS INTENDED FOR USE IN ADVANCE OF THE PROJECT INVOLVING THE SHOULDER, WHERE THE TRAVELED WAY REMAINS UNOBSTRUCTED.

W21-6 "SURVEY/CREW" - THIS SIGN IS INTENDED FOR USE IN ADVANCE OF A POINT WHERE A SURVEYING CREW IS WORKING IN OR ADJACENT TO THE ROADWAY. ✱

W21-20 "HIGHWAY PAINTING AHEAD" - THIS SIGN IS INTENDED FOR USE IN ADVANCE OF A POINT WHERE A PAINT CREW IS WORKING IN OR ADJACENT TO THE ROADWAY.

W21-20a "HIGHWAY PAINTING NEXT X MILES" - THIS SIGN IS INTENDED FOR USE IN ADVANCE OF PAINT CREW WORKING IN OR ADJACENT TO THE ROADWAY.

W22-1 "BLASTING/ZONE/(DIST.)" - THIS SIGN IS INTENDED FOR USE IN ADVANCE OF ANY POINT OR WORK SITE WHERE THERE ARE EXPLOSIVES BEING USED. THE R22-2 AND W22-3 SIGNS MUST BE USED IN SEQUENCE WITH THIS SIGN.

W22-3 "END/BLASTING/ZONE" - THIS SIGN IS TO BE USED TO DENOTE THE END OF THE RADIO INFLUENCE AREA AND SHALL BE PLACED A MINIMUM OF 1000 FEET FROM THE BLASTING ZONE, EITHER WITH OR PRECEDING THE END CONSTRUCTION SIGN.

W22-50(X) "ROCK SCALING X MILE(S)" - THIS SIGN IS INTENDED TO BE USED IN ADVANCE OF A FLAGGER IN ADVANCED OF THE WORK ZONE AREA.

ADVANCE PLACEMENT OF WARNING SIGNS

POSTED OR 85TH PERCENTILE SPEED	ADVANCE PLACEMENT DISTANCE (FEET)								
	+ CONDITION A	++ CONDITION B: DECELERATION TO THE LISTED ADVISORY SPEED (MPH) FOR THE CONDITION							
		MPH							
		0	10	20	30	40	50	60	70
20	225	115	●	--	--	--	--	--	--
25	325	155	●	●	--	--	--	--	--
30	460	200	●	●	--	--	--	--	--
35	565	250	●	●	●	--	--	--	--
40	670	305	100*	100*	●	--	--	--	--
45	775	360	125	100*	100*	●	--	--	--
50	885	425	200	175	125	100*	--	--	--
55	990	495	275	225	200	125	●	--	--
60	1100	570	350	325	275	200	100*	--	--
65	1200	645	450	400	350	275	200	100*	--
70	1250	730	525	500	450	375	275	200	--
75	1350	820	625	600	550	475	375	300	150

+ CONDITION A: SPEED REDUCTION AND LANE CHANGING IN HEAVY TRAFFIC. TYPICAL SIGNS ARE "MERGE" AND "RIGHT LANE ENDS".

++ CONDITION B: TYPICAL CONDITIONS ARE THE WARNING OF A POTENTIAL STOP SITUATION AND LOCATIONS WHERE THE ROAD USER MUST DECREASE SPEED TO MANEUVER THROUGH THE WARNED CONDITION. TYPICAL SIGNS ARE "STOP AHEAD", "SIGNAL AHEAD", "YIELD AHEAD", "CURVE", "REVERSE CURVE", "TURN".

● NO SUGGESTED DISTANCES ARE PROVIDED AT THESE SPEEDS, AS THE PLACEMENT IS DEPENDENT ON SITE CONDITIONS AND OTHER SIGNING.

Δ THE MINIMUM ADVANCE PLACEMENT DISTANCE IS LISTED AS 100 FEET TO PROVIDE ADEQUATE SPACING BETWEEN SIGNS.

A SUPPLEMENTAL PLAQUE MAY BE USED WITH WARNING SIGNS SPECIFYING THE DISTANCE TO THE CONDITION IF THERE IS AN IN-BETWEEN INTERSECTION THAT MIGHT CONFUSE THE MOTORIST.

✱ PLACEMENT SHOULD BE IN ACCORDANCE WITH WARNING SIGN PLACEMENT TABLE.

Computer File Information	
Creation Date: 07/04/12	
Created By: Nakao	R-2
Last Modification Date: 01/14/26	R-1
Last Modified By: NRIVERA	
CAD Ver.: MicroStation V8 Scale: Not to Scale Units: English	

Sheet Revisions	
Date:	Comments
01/14/26	UPDATED ADVANCE PLACEMENT
01/20/23	Replaced R52-6a(b) with R2-10(11) Updated W3-4 and R11-3

Colorado Department of Transportation
2829 W. Howard Pl.
Denver, CO 80204
Phone: 303-757-9654
FAX: 303-757-9219
Traffic Safety & Engineering EB

TRAFFIC CONTROLS FOR HIGHWAY CONSTRUCTION

Issued By: Traffic Safety & Engineering Branch July 31, 2019

STANDARD PLAN NO.
S-630-1
Standard Sheet No. 26 of 26
Project Sheet Number:

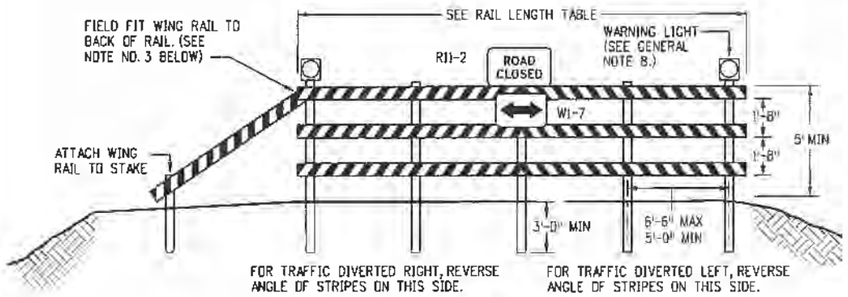

FIXED

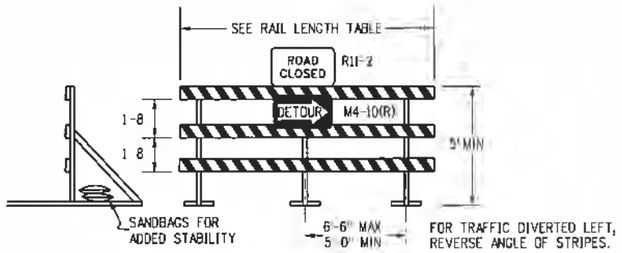

MOVABLE-SKIDS

MOVABLE-HINGED

TYPICAL TYPE 3 BARRICADES

1. TYPE 3 BARRICADES HAVE 3 REFLECTORIZED RAIL FACES IF FACING TRAFFIC IN ONE DIRECTION AND 6 IF FACING TRAFFIC IN TWO DIRECTIONS.
2. THE PORTION OF THE POST ABOVE THE GROUND LINE SHALL BE PAINTED IN ACCORDANCE WITH THE APPROPRIATE GENERAL NOTE.
3. DETACHABLE EXTENSION WING RAILS FOR BYPASSING OF CONSTRUCTION EQUIPMENT ARE PERMITTED, WHEN NECESSARY, ON FIXED OR MOVABLE TYPE 3 BARRICADES. THE LENGTH SHALL BE ADEQUATE TO CLOSE THE BORROW PIT AND/OR SHOULDER AS REQUIRED.

RAIL LENGTH TABLE

TYPE 3 BARRICADE		LENGTH
FIXED	MOVABLE	
F - A	M - A	8'- 14'
F - B	M - B	15'- 24'
F - C	M - C	25'- 35'
F - D	M - D	> 35'

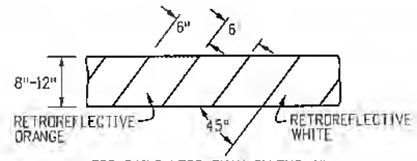

FOR RAILS LESS THAN 3' LONG, 4" WIDE STRIPES SHALL BE USED.

RAIL STRIPING DETAIL

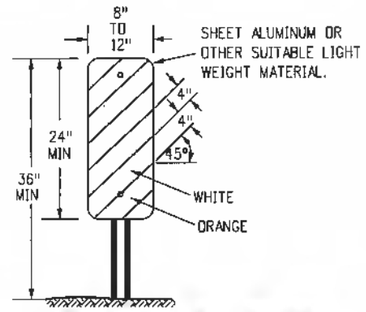

TYPICAL VERTICAL PANEL

1. IF SPECIAL PANELS 3' OR GREATER IN HEIGHT ARE REQUIRED, THEN 6" STRIPES SHALL BE USED.
2. IF FIXED PLACEMENT IS REQUIRED, MOUNT ON DELINEATOR POST. SEE COLORADO STANDARD PLAN S-612-1.

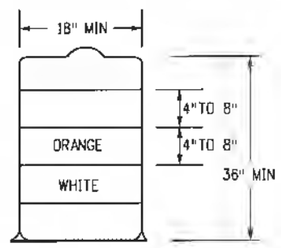

TYPICAL DRUM

1. THE 18" MINIMUM DIMENSION SHALL APPLY TO THE SMALLEST MEASUREMENT OF OBLONG, RECTANGULAR, OR FLATTENED SIDE DRUMS.
2. THERE SHALL BE AT LEAST TWO ORANGE AND TWO WHITE HORIZONTAL, CIRCUMFERENTIAL, RETROREFLECTIVE STRIPES ON EACH DRUM.

GENERAL NOTES

1. THE VARIOUS TYPES, COMBINATIONS AND APPLICATIONS OF SIGNS AND WARNING LIGHTS FOR BARRICADES REQUIRED FOR EACH PROJECT SHALL BE:
   A. AS SPECIFIED OR DETAILED IN THE PLANS.
   B. AS SHOWN IN APPLICABLE TYPICAL ILLUSTRATIONS.
   C. AS CALLED FOR AND SUBJECT TO APPROVAL BY THE ENGINEER.
2. TEMPORARY AND PERMANENT TYPE 3 BARRICADES SHALL BE FABRICATED FROM APPROVED CRASH TESTED MATERIALS. SEE SECTION 614 AND 630 OF THE STANDARD SPECIFICATIONS FOR ROAD AND BRIDGE CONSTRUCTION FOR ADDITIONAL REQUIREMENTS.
3. ALL PAINTING SHALL CONFORM WITH THE FOLLOWING:
   A. THE APPLICABLE SECTION OF 508 OF THE STANDARD SPECIFICATIONS.
   B. ALL SKIDS, BRACES AND POSTS SHALL BE PAINTED WITH 2 COATS OF EXTERIOR WHITE PAINT.
   C. THE BACKSIDES OF RAILS AND VERTICAL PANEL CHANNELIZING DEVICES FACING ONE DIRECTION OF TRAFFIC ONLY SHALL BE PAINTED WITH EXTERIOR WHITE PAINT.
   D. ALUMINUM OR GALVANIZED STEEL SKIDS, BRACES AND POSTS SHALL NOT BE PAINTED.
4. ALL STRIPED SURFACES SHALL CONFORM WITH THE FOLLOWING:
   A. THE ENTIRE AREA OF ORANGE AND WHITE STRIPES SHALL BE FABRICATED AS ONE PIECE.
   B. HORIZONTAL RAILS, WING RAILS AND VERTICAL PANEL CHANNELIZING DEVICES SHALL HAVE ORANGE AND WHITE STRIPES ON THE FACE SIDE(S) SLANTING DOWNWARD AT A 45° ANGLE TOWARD THE SIDE(S) TO WHICH TRAFFIC IS TO PASS OR TURN.
   C. PERMANENT BARRICADES SHALL HAVE RETROREFLECTIVE RED AND WHITE STRIPES. THEY MAY BE USED AT LOCATIONS TO MARK THE END OF A ROAD, STREET OR HIGHWAY THAT ENDS AT A "T" INTERSECTION, OR WHERE THERE IS NO CROSSROAD OR OUTLET.
   D. ALL RETROREFLECTIVE SHEETING SHALL CONFORM TO ASTM D4956:
      1. ORANGE AND WHITE SHALL BE TYPE IV MINIMUM.
      2. RED AND WHITE SHALL BE TYPE IV MINIMUM.
5. FOR ALL WOODEN BARRICADE COMPONENTS NOMINAL LUMBER DIMENSIONS ARE SATISFACTORY.
6. ALL SCREWS, BOLTS, NUTS AND WASHERS SHALL BE GALVANIZED OR CADMIUM PLATED.
7. STABILITY OF BARRICADES AND CHANNELIZING DEVICES SHALL CONFORM WITH THE FOLLOWING:
   A. SKIDS (BASES) OF MOVABLE BARRICADES SHALL BE WEIGHTED WITH SANDBAGS ONLY WHERE NECESSARY TO PROVIDE STABILITY
   B. NO MOVABLE OR PORTABLE DEVICE SHALL BE WEIGHTED BY ANY METHOD OR WITH ANY MATERIAL THAT WOULD MAKE THEM HAZARDOUS TO MOTORISTS.
8. WARNING LIGHTS USED WITH BARRICADES, DRUMS AND VERTICAL PANELS SHALL CONFORM WITH THE FOLLOWING:
   A. USE FLASHING WARNING LIGHTS WHEN DEVICES ARE USED SINGLY, AND STEADY BURN LIGHTS WHEN THEY ARE USED IN A SERIES FOR CHANNELIZATION.
   B. THEY SHALL BE POSITIONED ABOVE THE TOP RAIL OF BARRICADES OR ON TOP OF DRUMS AND VERTICAL PANELS.
9. CONCRETE BARRIER (TEMPORARY) SHALL CONFORM WITH:
   A. PRECAST CONCRETE BARRIER AS SHOWN ON COLORADO STANDARD PLAN M-606-14.
   B. BARRIER REFLECTORS SHALL BE INSTALLED THAT MEET THE REQUIREMENTS OF STANDARD TYPICAL DELINEATOR INSTALLATIONS, EXCEPT THE MAXIMUM SPACING SHALL BE 50', AND THEY WILL NOT BE PAID FOR BUT ARE INCLUDED IN THE COST OF THE BARRIER.
   C. CONCRETE BARRIER END TREATMENT SHALL BE IN ACCORDANCE WITH CLEAR ZONE CRITERIA, AND PLACED AS SHOWN ON THE PLANS.
10. SIGN PANELS MOUNTED ON BARRICADES WILL BE PAID FOR SEPARATELY.

Computer File Information	
Creation Date: 07/04/12	
Created By: JSW	
Last Modification Date: 07/31/19	
Last Modified By: AVU	
CAD Ver.: MicroStation V8 Scale: Not to Scale Units: English	

Sheet Revisions	
Date:	Comments

Colorado Department of Transportation
2829 W. Howard Pl.
Denver, CO 80204
Phone: 303-757-9436
FAX: 303-757-9219
Traffic & Safety Engineering MKB

BARRICADES, DRUMS, CONCRETE BARRIERS (TEMP) & VERTICAL PANELS

Issued By: Traffic & Safety Engineering Branch July 31, 2019

STANDARD PLAN NO.
S-630-2
Standard Sheet No. 1 of 1
Project Sheet Number:

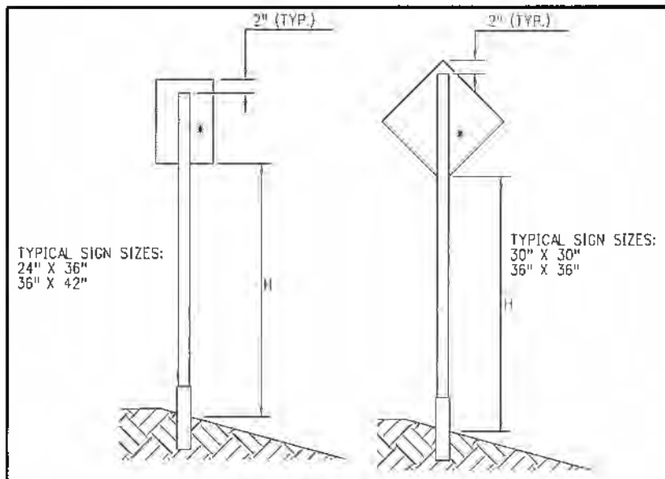

● **SIGN POST REQUIREMENTS**

POST TYPE	POST SIZE	MAX. CLEAR HEIGHT, H (FT.)	MAX. SIGN AREA (SF)
SQUARE TUBING	2.25" X 2.25" (12 GA.)	10	10.5
SQUARE TUBING	1.75" X 1.75" (12 GA.)	9	5
SQUARE TUBING	2.00" X 2.00" (12 GA.)	9	8
SQUARE TUBING	2.25" X 2.25" (12 GA.)	9	10.5
SQUARE TUBING	1.75" X 1.75" (12 GA.)	8	6
SQUARE TUBING	2.00" X 2.00" (12 GA.)	8	9
SQUARE TUBING	1.75" X 1.75" (12 GA.)	7	7
SQUARE TUBING	2.00" X 2.00" (12 GA.)	7	10

* SINGLE POST SHALL BE PLACE IN THE CENTER OF THE SIGN

SINGLE POST INSTALLATION

(TOTAL SIGN AREA NOT TO EXCEED 10.5 SF)

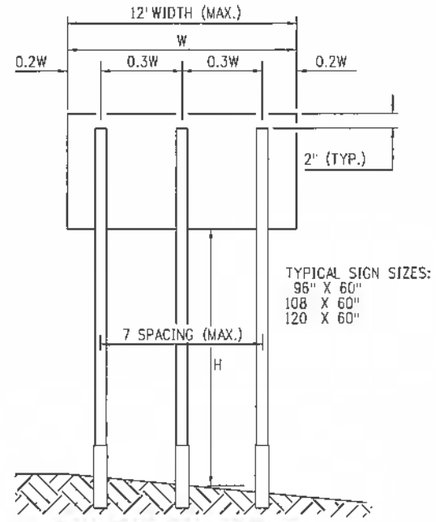

● **SIGN POST REQUIREMENTS**

POST TYPE	POST SIZE	MAX. CLEAR HEIGHT, H (FT.)	MAX SIGN AREA (SF)
△U-CHANNEL	3 LB./FT.	11	36
△SQUARE TUBING	2.50" X 2.50" (10 GA.)	9	45
△SQUARE TUBING	2.50" X 2.50" (10 GA.)	7	50
○SQUARE TUBING	2.50" X 2.50" (10 GA.)	11	36
○SQUARE TUBING	2.50" X 2.50" (10 GA.)	9	45

TRIPLE POST INSTALLATION

(TOTAL SIGN AREA NOT TO EXCEED 50 SF)

GENERAL NOTES

1. ALL SQUARE TUBING SIGN POST REQUIREMENTS ARE BASED ON A 10 OR 12-GAUGE THICKNESS, ASTM A570 GRADE 50 STEEL, A MINIMUM YIELD STRENGTH OF 60,000 PSI AND A 70 MPH WIND LOAD. ALL U-CHANNEL SIGN POSTS REQUIREMENTS ARE BASED ON A MINIMUM YIELD STRENGTH OF 80,000 PSI AND 85 MPH WIND LOAD.
2. STEEL POSTS, BASE POSTS, AND SLIP BASES FOR ALUMINUM PANEL SIGNS SHALL BE SELECTED FROM THE CDOT APPROVED PRODUCT LIST.
3. BASE POSTS SHALL NOT EXTEND MORE THAN 4" ABOVE GROUND LEVEL AND SHALL BE OF THE SAME WEIGHT/GAUGE AND TYPE AS THE SIGN POST.
4. INTERMIXING OF U-CHANNEL AND SQUARE TUBING POSTS, POSTS OF DIFFERENT WEIGHTS/GAUGES OR PRODUCT BRANDS IS PROHIBITED.
5. SUPPLEMENTAL SIGNS SHALL NOT BE ATTACHED DIRECTLY TO PRIMARY PANELS.
6. SPACING BETWEEN SUPPLEMENTAL PANELS AND PRIMARY PANELS SHALL NOT EXCEED 8".
7. SIGN PANELS PLACED PARALLEL TO TRAFFIC SHALL BE MOUNTED ON A MULTI-DIRECTIONAL BREAKAWAY SYSTEM. (SEE STANDARD PLAN S-630-4, SHEET 2)
8. AN APPROVED SLIP BASE IS REQUIRED WITH THE DOUBLE POST AND TRIPLE POST INSTALLATION. (SEE STANDARD PLAN S-630-4, SHEET 2).
9. SEE MANUFACTURER'S DRAWINGS FOR SPECIFIC ASSEMBLY INFORMATION (POST-TO-BASE POST OVERLAP), INCLUDING TYPES OF NUTS, BOLTS, WASHERS, AND OTHER PARTS REQUIRED FOR PRODUCT USE.
10. LAP-SPLICE OR MULTI-DIRECTIONAL SLIP BASE MAY BE USED. SEE STANDARD PLAN S-630-4, SHEET 2.

LEGEND

● SEE GENERAL NOTE 1.
▲ SEE GENERAL NOTE 4.
△ SEE GENERAL NOTE 8.
● SEE GENERAL NOTE 9.
○ SEE GENERAL NOTE 10.

COLORADO LICENSED PROFESSIONAL ENGINEER
MANJARI BHATT
43178
08/01/19

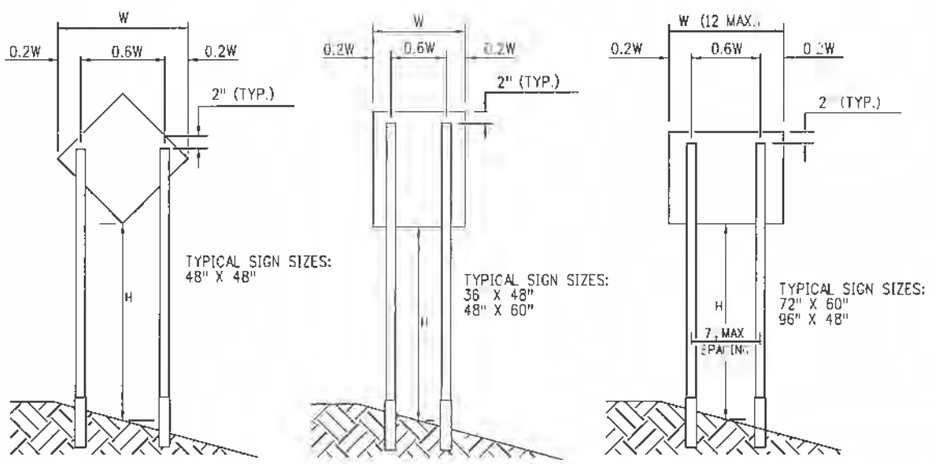

● **SIGN POST REQUIREMENTS**

POST TYPE	POST SIZE	MAX. CLEAR HEIGHT, H (FT.)	MAX SIGN AREA (SF)
SQUARE TUBING	2.25" X 2.25" (12 GA.)	11	13
SQUARE TUBING	2.25" X 2.25" (12 GA.)	9	15
SQUARE TUBING	2.25" X 2.25" (12 GA.)	8	16
SQUARE TUBING	2.25" X 2.25" (12 GA.)	7	20
△U-CHANNEL	3 LB./FT.	11	25
△U-CHANNEL	3 LB./FT.	9	30
△SQUARE TUBING	2.50" X 2.50" (10 GA.)	7	36

DOUBLE POST INSTALLATION

(TOTAL SIGN AREA NOT TO EXCEED 30 SF)

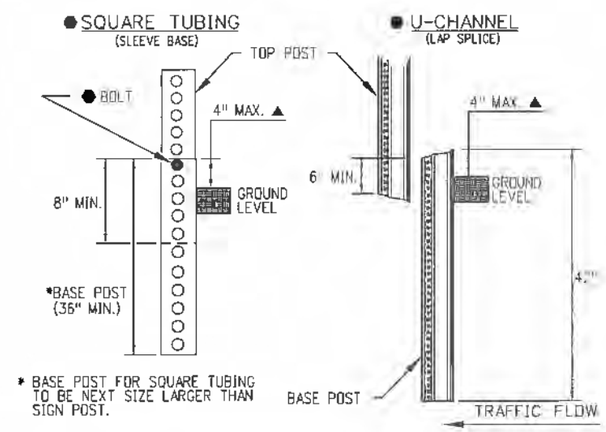

BASE POST INSTALLATION DETAILS

FOR SQUARE TUBING AND U-CHANNEL SYSTEMS

(SEE STANDARD PLAN S-630-4, SHEET 2 FOR MULTI-DIRECTIONAL SLIP BASE SYSTEMS)

Computer File Information	Sheet Revisions	
Creation Date: 07/04/12	Date:	Comments
Created By: KEN		
Last Modification Date:		
Last Modified By:		
CAD Ver.: MicroStation V8 Scale: Not to Scale Units: English		

Colorado Department of Transportation
2829 W. Howard Pl.
Denver, CO 80204
Phone: 303-757-9436
FAX: 303-757-9219
Traffic & Safety Engineering MKB

STEEL SIGN SUPPORT (TEMPORARY) INSTALLATION DETAILS

Issued By: Traffic & Safety Engineering Branch July 31, 2019

STANDARD PLAN NO.
S-630-4
Standard Sheet No. 1 of 2
Project Sheet Number:

SQUARE TUBING SLIP BASE

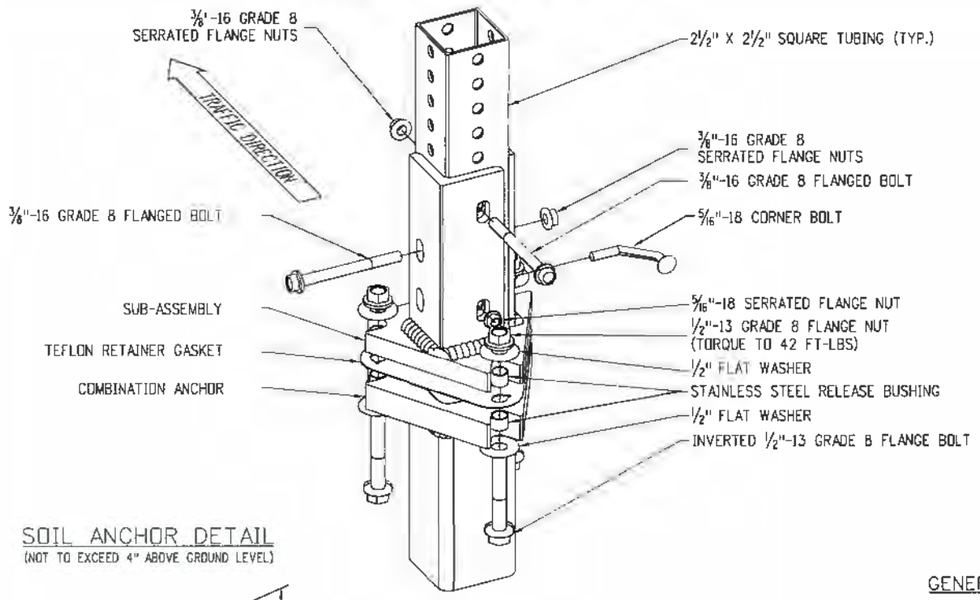

U-CHANNEL SLIP BASE

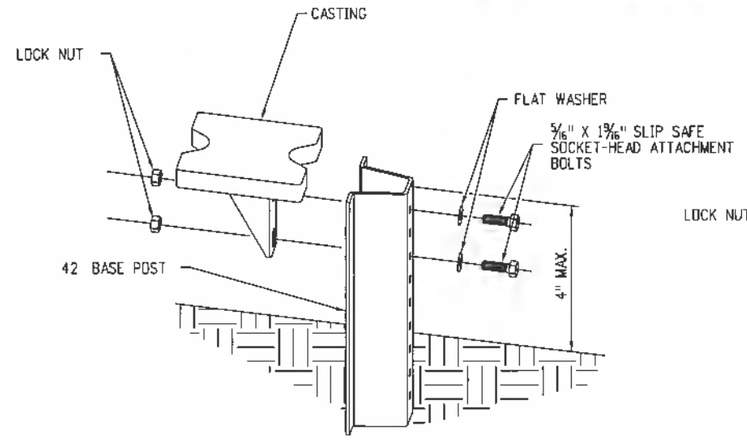

NOTE: BOLTS SHOULD BE TIGHTEN 1/2 TO 3/4 TURN AFTER SNUG.

STEP 1

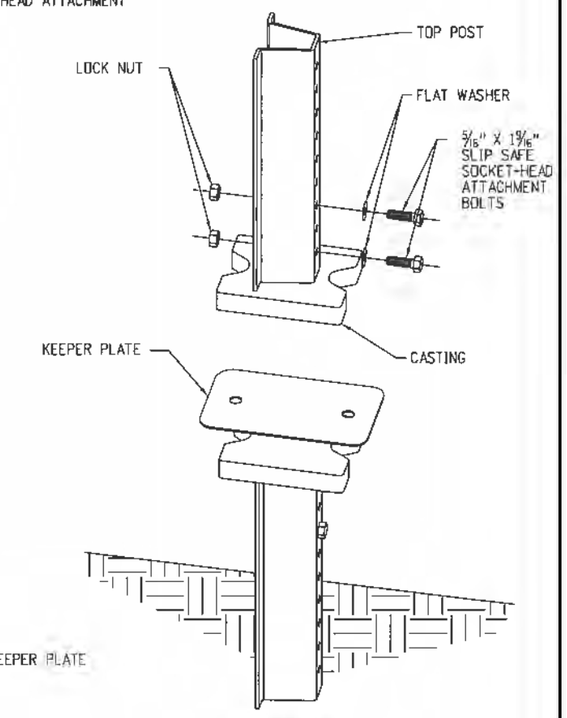

STEP 2

SOIL ANCHOR DETAIL

(NOT TO EXCEED 4" ABOVE GROUND LEVEL)

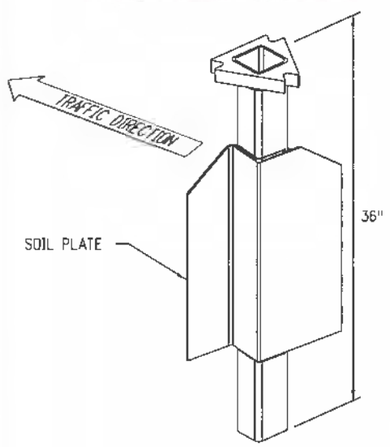

GENERAL NOTE:

THE CONTRACTOR SHALL INSTALL THE SOIL ANCHOR AND SLIP BASE PER THE MANUFACTURER'S RECOMMENDATIONS WITHOUT ADDITIONAL COMPENSATION.

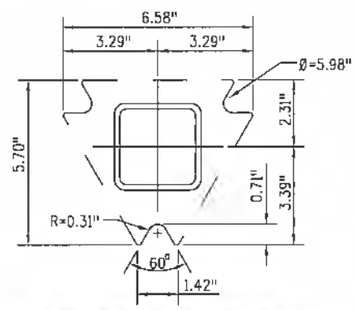

ANCHOR TOP VIEW

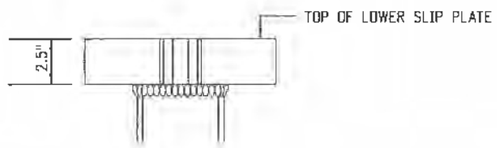

ANCHOR FRONT VIEW

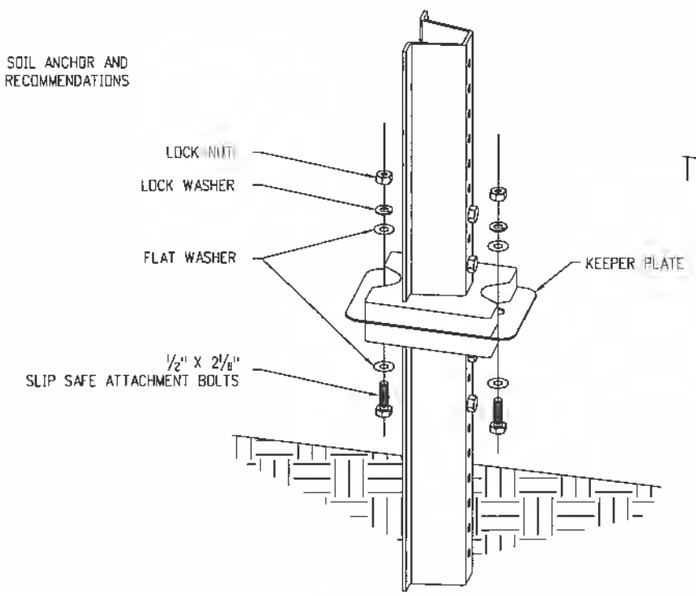

NOTE: TIGHTEN NUT 1/4 TO 1/2TURN AFTER SNUG.

STEP 3

MULTI-DIRECTIONAL SLIP BASE POST DETAILS

Computer File Information		Sheet Revisions	
Creation Date: 07/04/12		Date:	Comments
Created By: KEN			
Last Modification Date:			
Last Modified By:			
CAD Ver.: MicroStation V8 Scale: Not to Scale Units: English			

Colorado Department of Transportation
2829 W. Howard Pl.
Denver, CO 80204
Phone: 303-757-9436
FAX: 303-757-9219
Traffic & Safety Engineering MKB

STEEL SIGN SUPPORT (TEMPORARY) INSTALLATION DETAILS

Issued By: Traffic & Safety Engineering Branch July 31, 2019

STANDARD PLAN NO.

S-630-4

Standard Sheet No. 2 of 2

Project Sheet Number:

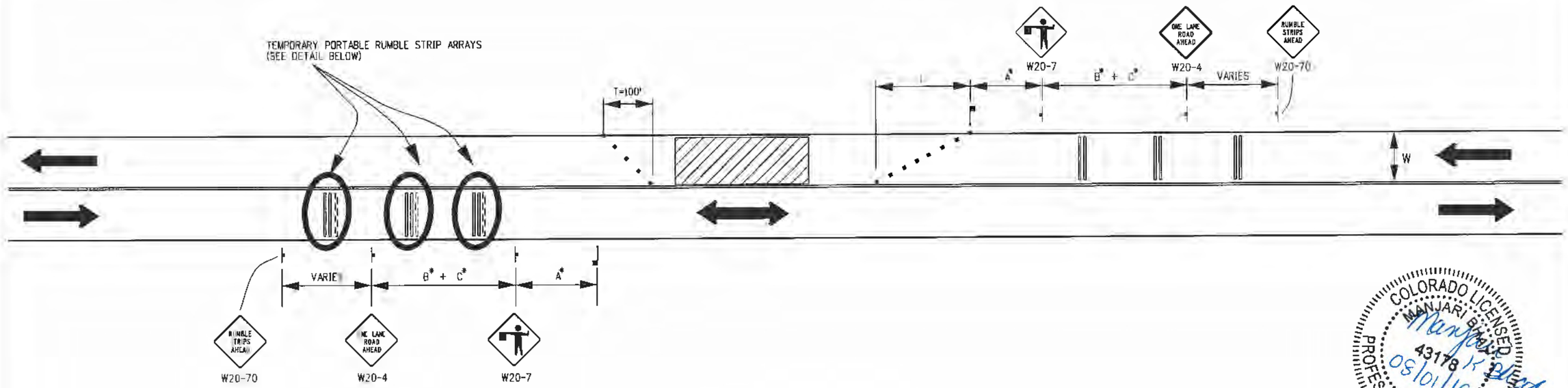

COLORADO LICENSED
MANJARI BHAT
43178
PROFESSIONAL ENGINEER
Manjari Bhat
05/01/19

CASE NO. 1
TYPICAL APPLICATION
TWO-LANE UNDIVIDED HIGHWAY

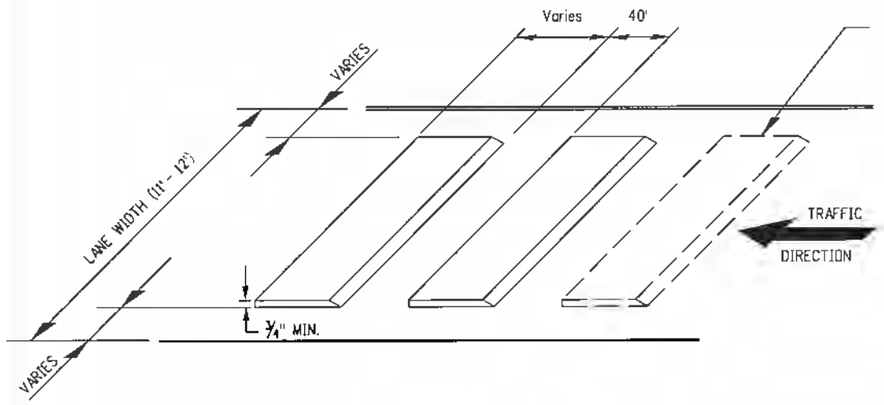

DETAIL - TEMPORARY PORTABLE RUMBLE STRIP ARRAY

GENERAL NOTES

1. TEMPORARY PORTABLE RUMBLE STRIP ARRAYS SHALL BE PLACED IN ADVANCE OF EACH FLAGGING STATION WHEN CALLED FOR IN THE PLANS.
2. TEMPORARY PORTABLE RUMBLE STRIP ARRAYS ARE USED TO SUPPLEMENT A SERIES OF ADVANCED WARNING SIGNS AND SHALL BE INSTALLED AND REMOVED WHEN THE SIGNS ARE INSTALLED AND REMOVED.
3. REMOVE THE TEMPORARY PORTABLE RUMBLE STRIPS PRIOR TO REMOVING THE ADVANCED WARNING SIGNS.
4. LANE WIDTHS SHOULD BE MAINTAINED THROUGH WORK ZONE TRAVEL LANES WHEREVER PRACTICAL.
5. DO NOT USE TEMPORARY RUMBLE STRIPS ON SLIPPERY SURFACES, SUCH AS WET OR SANDY PAVEMENT.
6. DO NOT USE TEMPORARY RUMBLE STRIPS ON HORIZTONAL CURVES.
7. USE TEMPORARY PORTABLE RUMBLE STRIPS ON ROADWAYS WITH POSTED WORK ZONE SPEED LIMITS OF 75 MPH OR LESS.
8. FOR THE LOWEST AIR TEMPERATURE TO APPLY THE TEMPORARY PORTABLE RUMBLE STRIPS ON ROAD PAVEMENTS, CONTACT THE TEMPORARY PORTABLE RUMBLE STRIP MANUFACTURER.
9. INSTALL PER MANUFACTURER'S RECOMMENDATIONS.
10. OPTIONAL RUMBLE STRIP TO INSTALL, AS DIRECTED BY THE ENGINEER.

LEGEND

- ▪ CHANNELIZING DEVICE: FOR TYPE OF DEVICE TO BE USED, SEE THE SCHEDULE OF CONSTRUCTION TRAFFIC CONTROL DEVICES INCLUDED IN PLANS.
- ← DIRECTION OF TRAVEL
- FLAGGER
- WORK AREA

T = TERMINATION TAPER = 100'
S = WORK ZONE SPEED LIMIT
W = LANE WIDTH
L = MERGING TAPER (S > 45 MPH) = WxS
L = MERGING TAPER (S < 45 MPH) = $(WxS^2)/60$
N = NUMBER OF DEVICES (L/S) + 1
N = NUMBER OF DEVICES AT TERMINATION TAPER = 5 (MIN.)

*KEY TO ADVANCE SIGNING DISTANCES

ROAD TYPE	DISTANCE BETWEEN SIGNS (FT.)		
	A	B	C
URBAN (S < 45 MPH)	100	100	100
URBAN (S ≥ 45 MPH)	350	350	350
RURAL	500	500	500

Computer File Information		Sheet Revisions	
Creation Date: 07/04/12		Date:	Comments
Created By: KEN	R-0	01/24/13	Made 3rd Rumble Strip Array Optional
Last Modification Date: 05/22/18	R-2	07/26/13	Corrected Sign Code Designation for Flagger (Symbol) Sign to W20-7
Last Modified By: DiNardo	R-3	06/11/15	Modified Minimum Thickness to ¼" Modified Max Speed to 75 MPH
CAD Ver.: MicroStation V8 Scale: Not to Scale Units: English	R-4	05/22/18	Modified "Varible" Spacing to a Defined 40' feet

Colorado Department of Transportation
2829 W. Howard Pl.
Denver, CO 80204
Phone: 303-757-9436
FAX: 303-757-9219
Traffic & Safety Engineering
MKB

PORTABLE RUMBLE STRIPS (TEMPORARY)

Issued By: Traffic & Safety Engineering Branch July 31, 2019

STANDARD PLAN NO.
S-630-5
Standard Sheet No. 1 of 2
Project Sheet Number:

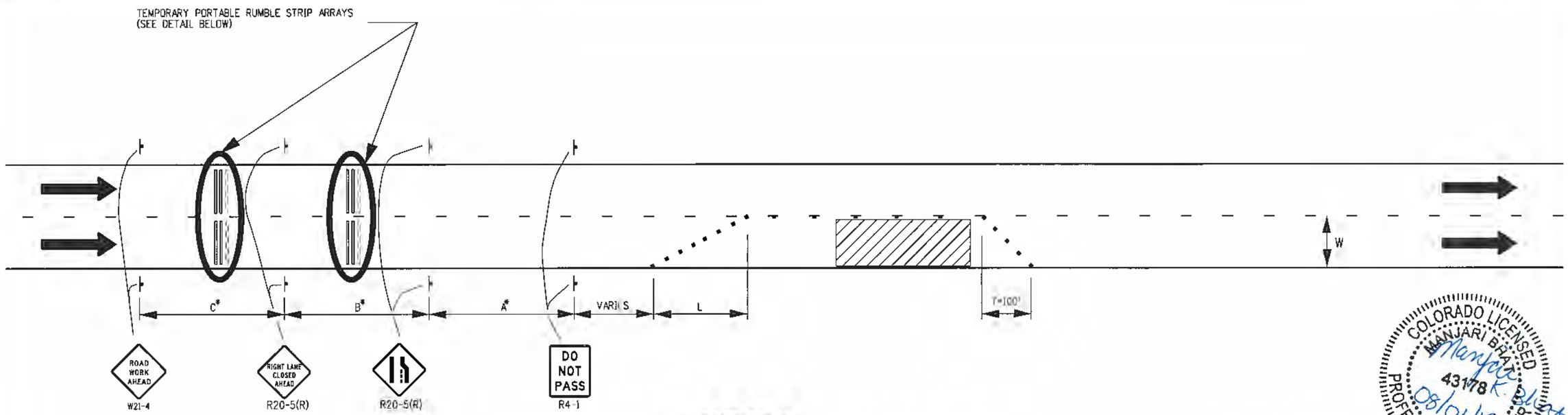

CASE NO. 2
TYPICAL APPLICATION
MULTI-LANE DIVIDED HIGHWAY WITH RIGHT LANE CLOSED

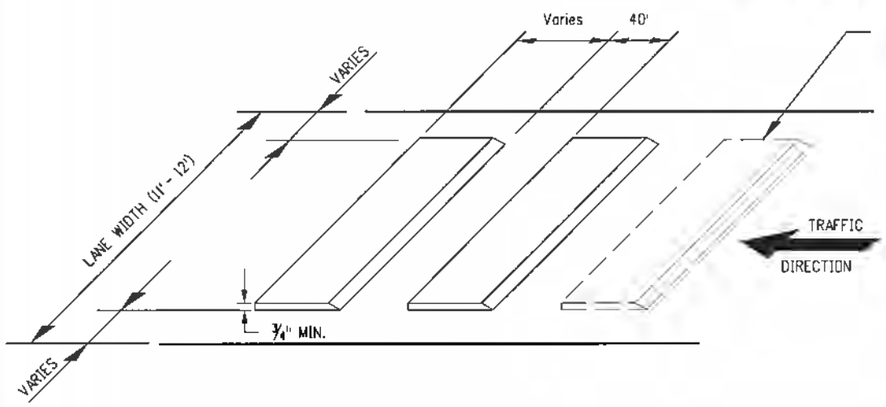

DETAIL - TEMPORARY PORTABLE RUMBLE STRIP ARRAY

GENERAL NOTES

1. TEMPORARY PORTABLE RUMBLE STRIP ARRAYS ARE USED TO SUPPLEMENT A SERIES OF ADVANCED WARNING SIGNS AND SHALL BE INSTALLED AND REMOVED WHEN THE SIGNS ARE INSTALLED AND REMOVED.
2. REMOVE THE TEMPORARY PORTABLE RUMBLE STRIPS PRIOR TO REMOVING THE ADVANCED WARNING SIGNS.
3. LANE WIDTHS SHOULD BE MAINTAINED THROUGH WORK ZONE TRAVEL LANES WHEREVER PRACTICAL.
4. DO NOT USE TEMPORARY RUMBLE STRIPS ON SLIPPERY SURFACES, SUCH AS WET OR SANDY PAVEMENT.
5. DO NOT USE TEMPORARY RUMBLE STRIPS ON HORIZTONAL CURVES.
6. USE TEMPORARY PORTABLE RUMBLE STRIPS ON ROADWAYS WITH POSTED WORK ZONE SPEED LIMITS OF 75 MPH OR LESS.
7. FOR THE LOWEST AIR TEMPERATURE TO APPLY THE TEMPORARY PORTABLE RUMBLE STRIPS ON ROAD PAVEMENTS, CONTACT THE TEMPORARY PORTABLE RUMBLE STRIP MANUFACTURER.
8. INSTALL PER MANUFACTURER'S RECOMMENDATIONS.
9. OPTIONAL RUMBLE STRIP TO INSTALL, AS DIRECTED BY THE ENGINEER.

COLORADO LICENSED
MANJARI BRAID
43178
PROFESSIONAL ENGINEER
Manjari K. Braid
08/01/19

LEGEND

- CHANNELIZING DEVICE: FOR TYPE OF DEVICE TO BE USED, SEE THE SCHEDULE OF CONSTRUCTION TRAFFIC CONTROL DEVICES INCLUDED IN PLANS.
- DIRECTION OF TRAVEL
- WORK AREA

T = TERMINATION TAPER = 100
S = WORK ZONE SPEED LIMIT
W = LANE WIDTH
L = MERGING TAPER (S ≥ 45 MPH) = WxS
L = MERGING TAPER (S < 45 MPH) = $(WxS^2)/60$
N = NUMBER OF DEVICES (L/S) + 1
N = NUMBER OF DEVICES AT TERMINATION TAPER = 5 (MIN.)

*KEY TO ADVANCE SIGNING DISTANCES

ROAD TYPE	DISTANCE BETWEEN SIGNS (FT.)		
	A	B	C
URBAN (S < 45 MPH)	100	100	100
URBAN (S ≥ 45 MPH)	350	350	350
RURAL	500	500	500
EXPRESSWAY/FREEWAY	1,000	1,500	2,640

Computer File Information	
Creation Date: 07/04/12	
Created By: KEN	
Last Modification Date: 05/22/18	
Last Modified By: DiNardo	
CAD Ver.: MicroStation V8 Scale: Not to Scale Units: English	

	Sheet Revisions	
	Date:	Comments:
R-1	01/24/13	Made 3rd Rumble Strip Array Optional
R-2	08/11/15	Modified Minimum Thickness to ¾" Modified Max Speed to 75 MPH
R-3	05/22/18	Modified "Variable" Spacing to a Defined 40 feet

Colorado Department of Transportation
2829 W. Howard Pl.
Denver, CO 80204
Phone: 303-757-9436
FAX: 303-757-9219
Traffic & Safety Engineering MKB

PORTABLE RUMBLE STRIPS (TEMPORARY)

Issued By: Traffic & Safety Engineering Branch July 31, 2019

STANDARD PLAN NO.
S-630-5
Standard Sheet No. 2 of 2
Project Sheet Number: